Appendix A. Results and Calculations

Spreadsheet Printouts

General Calculations

Mercury Specific Calculations and Examples

Data Tracking Logs

FOSSIL ENERGY RESEARCH CORP.

ISOKINETIC TEST DATA SUMMARY

Test Program Information				
Client	SRP	*Data input by*	MDM	
Plant/Unit	Navajo 3	*Method*	Ontario Hydro	
Sample Location	Module 3B Inlet	*Stack Area, ft^2*	484.0	
Fuel	Coal	*Sample Train ID*	1-FERCo	
F_D, dscf/MMBtu	9780	*Meter factor, Y_D*	1.001	
F_C, scf CO_2/MMBtu	1800	*Ref Temp, F*	68	
Pre-test Information				
Test Number	1-Inlet	2-Inlet	3-Inlet	Average
Test Date, 1999	25-Oct	26-Oct	26-Oct	
Pitot Factor, C_p	0.84	0.84	0.84	-
Barometric Pressure, in Hg	25.8	25.8	25.8	-
Sample Time, min	120	120	120	-
Nozzle Diameter, in	0.224	0.224	0.224	-
Sample Train Data				
Meter Volume, acf	68.747	67.525	75.167	-
Orifice k factor	0.539	0.541	0.552	0.544
Static Pressure, iwg	4.1	4.1	4.1	4
ΔP, iwg	0.6237	0.5984	0.6384	0.6202
ΔH, iwg	1.13	1.08	1.29	1.17
Meter Temp, F	79.1	64.5	87.5	77.0
Stack Temp, F	314.0	304.5	312.8	310.4
Water collected, g	120.5	116.2	127.8	121.5
O_2, %	6.23	5.88	6.00	6.04
CO_2, %	10.09	10.30	10.12	10.17
Start time/stop time	1507/1726	0755/1015	1137/1353	
Sample Train Results				
Std Sample Vol, dscf	58.301	58.850	62.796	59.982
Std Sample Vol, m^3	1.651	1.666	1.778	1.699
Std Moisture Vol, dscf	5.688	5.485	6.032	-
Moisture, %	8.89%	8.53%	8.76%	8.73%
Dry Molecular Weight	29.86	29.88	29.86	-
Wet Molecular Weight	28.81	28.87	28.82	28.83
Stack Gas Velocity, ft/s	57.44	55.86	58.06	57.12
Stack Gas Flow, wacfm	1,668,171	1,622,196	1,686,089	1,658,819
Stack Gas Flow, dscfm	904,504	894,057	916,888	905,149
Isokinetic Ratio, %	95.02	97.03	100.96	-
Mercury catch, ug				
Particulate	0.08	0.08	0.08	
Oxidized	3.95	0.63	0.93	
Elemental	4.80	5.50	5.20	
Total	8.75	6.13	6.13	7.00
Mercury catch, ug/m^3				
Particulate	0.048	0.048	0.045	0.05
Oxidized	2.39	0.38	0.52	1.10
Elemental	2.91	3.30	2.92	3.04
Total	5.30	3.68	3.45	4.14
Mercury catch, lb/10^{12} Btu				
Particulate	0.042	0.041	0.038	0.040
Oxidized	2.08	0.32	0.45	0.95
Elemental	2.52	2.80	2.50	2.61
Total	4.60	3.12	2.95	3.56
Mercury, lb/hr				
Particulate	0.0003	0.0003	0.0003	0.0003
Oxidized	0.0161	0.0025	0.0035	0.0074
Elemental	0.0195	0.0218	0.0198	0.0204
Total	0.0356	0.0243	0.0233	0.0278

Note: shaded values are not detects. Calculations are shown at detection levels.

FOSSIL ENERGY RESEARCH CORP.

ISOKINETIC TEST DATA SUMMARY

Test Program Information				
Client	SRP	*Data input by*	MDM	
Plant/Unit	Navajo 3	*Method*	Ontario Hydro	
Sample Location	Stack	*Stack Area, ft^2*	948.5	
Fuel	Coal	*Sample Train ID*	3-WCS	
F_D, dscf/MMBtu	9780	*Meter factor, Y_D*	0.98	
F_C, scf CO_2/MMBtu	1800	*Ref Temp, F*	68	
Pre-test Information				
Test Number	1-Stack	2-Stack	3-Stack	Average
Test Date, 1999	25-Oct	26-Oct	26-Oct	
Pitot Factor, C_p	0.84	0.84	0.84	-
Barometric Pressure, in Hg	25.3	25.3	25.3	-
Sample Time, min	120	120	120	-
Nozzle Diameter, in	0.227	0.227	0.227	-
Sample Train Data				
Meter Volume, acf	75.969	76.058	78.837	-
Static Pressure, iwg	0.83	0.84	0.84	0.84
ΔP, iwg	0.5231	0.5207	0.5431	0.5290
ΔH, iwg	1.09	1.05	1.14	1.09
Meter Temp, F	87.6	80.6	84.4	84.2
Stack Temp, F	120.3	120.4	121.0	120.6
Water collected, g	217.4	223.1	239.0	226.5
O_2, %	5.96	5.82	5.85	5.88
CO_2, %	10.28	10.34	10.22	10.28
Start time/stop time	1500/1727	0755/1015	1130/1350	
Sample Train Results				
Std Sample Vol, dscf	60.888	61.742	63.568	62.066
Std Sample Vol, m^3	1.724	1.748	1.800	1.758
Std Moisture Vol, dscf	10.261	10.530	11.281	-
Measured Moisture, %	14.42%	14.57%	15.07%	14.69%
Saturation Moisture, %	13.8%	13.8%	14.1%	13.9%
Dry Molecular Weight	29.88	29.89	29.87	-
Wet Molecular Weight	28.24	28.25	28.20	28.23
Stack Gas Velocity, ft/s	46.67	46.57	47.62	46.95
Stack Gas Flow, wacfm	2,656,269	2,650,138	2,710,407	2,672,271
Stack Gas Flow, dscfm	1,765,899	1,761,571	1,793,508	1,773,659
Isokinetic Ratio, %	97.0	98.6	99.7	-
Mercury catch, ug				
Particulate	0.08	0.03	0.02	
Oxidized	0.10	0.10	0.10	
Elemental	5.30	5.60	5.70	
Total	5.38	5.63	5.72	5.58
Mercury catch, ug/m^3				
Particulate	0.045	0.019	0.011	0.03
Oxidized	0.06	0.06	0.06	0.06
Elemental	3.07	3.20	3.17	3.15
Total	3.12	3.22	3.18	3.17
Mercury catch, lb/10^{12} Btu				
Particulate	0.04	0.02	0.01	0.02
Oxidized	0.05	0.05	0.05	0.05
Elemental	2.62	2.70	2.68	2.67
Total	2.66	2.72	2.69	2.69
Mercury, lb/hr				
Particulate	0.0003	0.0001	0.0001	0.0002
Oxidized	0.0004	0.0004	0.0004	0.0004
Elemental	0.020	0.021	0.021	0.021
Total	0.021	0.021	0.021	0.021

Note: shaded values are not detects. Calculations are shown at detection levels.

EMISSION CALCULATIONS

1. <u>Sample Volume and Isokinetics</u>

   a. Sample gas volume, dscf

   $V_{m\ std} = 0.03342 V_m\ [P_{bar} + (H/13.6)](T_{ref}/T_m)(Y)$

   b. Water vapor volume, scf

   $V_{w\ std} = 0.0472\ V_{lc}\ (T_{ref}/528°R)$

   c. Moisture content, nondimensional

   $B_{wo} = V_{w\ std}/(V_{m\ std} + V_{w\ std})$

   d. Stack gas molecular weight, lb/lb mole

   $MW_{dry} = 0.44(\%\ CO_2) + 0.32(\%\ O_2) + 0.28\ (\%\ N_2)$

   $MW_{wet} = MW_{dry}\ (1 - B_{wo}) + 18\ (B_{wo})$

   e. Absolute stack pressure, iwg

   $Ps = P_{bar} + P_{sg}/13.6$

   f. Stack velocity, ft/sec

$$V_s = 2.90\ C_p \sqrt{\Delta PTs}\ \sqrt{\frac{29.92}{Ps} \times \frac{28.95}{MW_{wet}}}$$

   g. Actual stack gas flow rate, wacfm

   $Q = (V_s)(A_s)(60)$

   h. Standard stack gas flow, dscfm

   $Q_{sd} = Q(1 - B_{wo})\ (T_{ref}/Ts)(Ps/29.92)$

   i. Percent isokinetic

$$I = \frac{17.32 \times T_s\ (V_{m\ std})}{(1 - B_{wo})\ \theta \times V_s \times Ps \times Dn^2} \times \frac{528°R}{T_{ref}}$$

2. <u>Particulate Emissions</u>

   a. Grain loading, gr/dscf

   $C = 0.01543\ (M_n/V_{m\ std})$

   b. Grain loading at 12% CO_2, gr/dscf

   $C_{(12\%\ CO2)} = C\ (12/\%CO_2)$

c. Mass emissions, lb/hr

$M = C \times Qsd \times (60\ min/hr)/(7000\ gr/lb)$

3. Gaseous Emissions, lb/hr

$$M = ppm \times 10^{-6} \quad \frac{MW_i\ lb/lb\ mole}{SV} \quad X\ Qsd\ X\ 60\ min/hr$$

where SV = specific molar volume of an ideal gas:

385.3 ft^3/lb mole for $T_{ref} = 528°R$

379.5 ft^3/lb mole for $T_{ref} = 520°R$

4. Emissions Rates, lb/10^6 Btu

a. Fuel factor at 68°F, dscf/10^6 Btu at 0% O_2

$$F_{68} = \frac{10^6[3.64(\%H) + 1.53(\%C) + 0.14(\%N) + 0.57(\%S) - 0.46(\%O_2, fuel)]}{HHV,\ Btu/lb}$$

b. Fuel factor at 60°F

$F_{60} = F_{68}\ (520°R/528°R)$

c. Gaseous emission factor

$$lb/10^6\ Btu_i = ppm_i \times 10^{-6} \times \frac{MW_i\ lb}{lb\ mole} \times \frac{1}{SV} \times F \times \frac{20.9}{20.9 - \%O_2}$$

d. Particulate emission factor

$$lb/10^6\ Btu = C \times \frac{1\ lb}{7000\ gr} \times F \times \frac{20.9}{20.9 - \%O_2}$$

These calculations are routinely performed on FERCo's computer.

Nomenclature:

A_s	=	stack area, ft^2
B_{wo}	=	flue gas moisture content
$C_{12\%CO2}$	=	particulate grain loading, gr/dscf corrected to 12% CO_2
C	=	particulate grain loading, gr/dscf
C_p	=	pitot calibration factor, dimensionless
Dn	=	nozzle diameter, in.
F	=	fuel F factor, dscf/10^6 Btu at 0% O_2
H	=	orifice pressure differential, iwg
I	=	% isokinetics
M_n	=	mass of collected particulate, mg
M_i	=	mass of emissions species i, lb/hr
MW	=	molecular weight of flue gas
MW_i	=	molecular weight of species i:
		NO_x: 64
		CO: 28
		SO_2: 64
		HC: 16
Σ	=	sample time, min.
ΔP	=	average velocity head, iwg = $\left(\overline{\sqrt{\Delta P}}\right)^2$
P_{bar}	=	barometric pressure, in. Hg
Ps	=	stack absolute pressure, in. Hg
Psg	=	stack static pressure, iwg
Q	=	wet stack gas flow rate at actual conditions, wacfm
qsd	=	dry stack gas flow rate at standard conditions, dscfm
SV	=	specific molar volume of an ideal gas at std conditions, ft^3/lb mole
Tm	=	meter temperature, °R
T_{ref}	=	reference temperature, °R
Ts	=	stack temperature, °R
V_s	=	stack velocity, ft/sec
V_{lc}	=	volume of liquid collected in impingers, ml
V_m	=	dry meter volume uncorrected, dcf
$V_{m\ std}$	=	dry meter volume at standard conditions, dscf
$V_{w\ std}$	=	volume of water vapor at standard conditions, scf
Y	=	meter calibration coefficient

FOSSIL ENERGY RESEARCH CORP.

23342 C SOUTH POINTE, LAGUNA HILLS, CA 92653 (714) 859-4466

Date _____ Operator _____

Sampling train _____ Checked by _____

Site _____ Used for runs _____

1. C_p (for S-type pitots) = _____
2. P_b (barometric pressure at location) = _____
3. D_n (nozzle diameter inches) = _____
4. B_w (moisture in gas stream, percent) = _____
5. P_m (barometric pressure at meter, in Hg) $= \frac{\text{AVG } \Delta H}{13.6} + P_b$ = _____
6. $\Delta H@$ (pressure differential of orifice in meterbox, H_2O) = _____
7. P_s (stack pressure, in Hg) $= P_b \pm \frac{\text{stack static pressure } (H_2O)}{13.6}$ = _____
8. T_s (average stack temperature, °R) = _____ °F + 460 = _____ °R
9. T_m (average meter temperature, °R = ambient + 20°F + 460 = _____ °R
10. M_d (molecular weight of stack gas, dry, lb/lb mole)
    $= (0.44 \times \% CO_2) + (0.32 \times \% O_2) + [0.28 + \% N_2]$
    $= (0.44 \times$ _____ $) + (0.32 \times$ _____ $) + (0.28 +$ _____ $)$ = _____
11. M_s (molecular weight of stack gas with water vapor, lb/lb mole)
    $= [M_d \times (1-B_w)] + [18 \times B_w]$
    $= [$ _____ $\times (1 -$ _____ $)] + [18 \times$ _____ $]$ = _____
12. $K = (846.72)\ (D_n^4)\ (\Delta H@)\ (C_p^2)\ (1-B_w)^2 \left[\frac{M_d}{M_s}\right] \left[\frac{P_s}{P_m}\right] \left[\frac{T_m}{T_s}\right]$

    $K = (846.72)$ (_____)^4 (_____) (_____)^2 (_____)^2 (_____) (_____) (_____)
    $K =$ _____

$\Delta H = K\Delta P$
Correlation Chart

ΔH	ΔP

K-Factor Calculation Form

Calculations to determine mercury as lb/10^{12} Btu in fuel												
Mercury	=	Mercury	x	1.E-06	x	(1-H_2O)	/	HHV	*	1.E+12		
lb/10^{12} Btu		ppm dry						lb/Btu				
Example, Navajo Test 1												
3.1	=	0.04	x	1.E-06	x	0.8847	/	11,299	*	1.E+12		
lb/10^{12} Btu		ppm dry						lb/Btu				
Calculations to determine mercury as lb/hr in fuel												
Mercury	=	Mercury	x	1.E-06	x	(1-H_2O)	x	coal flow				
lb/hr		ppm dry						lb/hr as-fired				
Example, Navajo Test 1												
0.024	=	0.04	x	1.E-06	x	0.8847	x	690,300				
lb/hr		ppm dry						lb/hr as-fired				
Calculations to determine gas flow rates from fuel input												
Oxygen based												
Flow	=	fuel flow	x	HHV	x	Fd-factor	x	20.9/(20.9-O_2)	/	60	/	1,000,000
dscfm		lb/hr		Btu/lb		dscf/mmBtu				min/hr		
Example, Navajo Test 3												
1,785,655	=	700400	x	11263	x	9780	x	1.389	/	60	/	1,000,000
dscfm		lb/hr		Btu/lb		dscf/mmBtu				min/hr		
Carbon based												
Flow	=	fuel flow	x	HHV	x	Fc-factor	x	100/CO_2	/	60	/	1,000,000
dscfm		lb/hr		Btu/lb		dscf/mmBtu				min/hr		
Example, Navajo Test 3												
2,315,162	=	700400	x	11263	x	1800	x	9.783	/	60	/	1,000,000
dscfm		lb/hr		Btu/lb		dscf/mmBtu				min/hr		

Calculations to determine mercury as lb/10^{12} Btu in gas												
Mercury	=	Mercury	/	Sample vol	x	2.20.E-09	x	9780	*	20.9/(20.9-O_2)	*	1.E+06
lb/10^{12} Btu		ug/sample		dscf		lb/ug		f-factor		dilution		10^{12}/10^{6}
								dscf/10^{6} Btu		correciton		
Example, Navajo Test 3												
2.691	=	5.72	/	63.57	x	2.20.E-09	x	9780	x	1.389	*	1.E+06
lb/10^{12} Btu		ug/sample		dscf		lb/ug		f-factor		dilution		10^{12}/10^{6}
								dscf/10^{6} Btu		correction		
Calculations to determine mercury as lb/hr in gas												
Mercury	=	Mercury	/	Sample vol	x	2.20.E-09	x	Gas flow	x	60		
lb/hr		ug/sample		dscf		lb/ug		dscfm		min/hr		
Example, Navajo Test 3												
2.13E-02	=	5.72	/	63.57	x	2.20.E-09	x	1793508	x	60		
lb/hr		ug/sample		dscf		lb/ug		dscfm		min/hr		

Data Tracking Log

Test Unit: Navajo 3
Test Dates: 10/25-10/26/99

	By	Date	Revised data
Mercury Gas Data			
Data taken	MDM	10/26	
Data reduced	MDM	10/26	
Entered in spreadsheet	MDM	10/26	
Field custody taken	AB	10/26	
Lab data received	MDM	1/4	2/21
Lab data entered	MDM	1/4	2/28
Results prepared/summarized	MDM	1/4	2/28
Results entered in report	MDM	1/4	2/29
Coal sample data			
Lab data received	MDM	1/11	
Lab data entered	MDM	1/11	
Results prepared/summarized	MDM	1/11	
Results entered in report	MDM	1/11	

Appendix B. Raw Field Data and Calibration Data Sheets

Sampling Data

Velocity Traverses

O_2 Meter Calibration

O_2 Meter Gas Certificates

Dry Gas Meter Calibration

Pitot Probe Calibration

FOSSIL ENERGY RESEARCH CORPORATION
Ontario Hydro Mercury Speciation Sampling Data Sheet

FACILITY Navajo Unit 3 UNIT 3 TEST NO. Inlet-FB METHOD OH PAGE ____ OF ____
SAMPLE LOCATION ____ TEST CONDITION ____ AMBIENT TEMPERATURE ____
OPERATOR/ASSISTANT ____ METER VOLUME START/END ____ / ____ DATE 10/26/99

PRE-TEST DATA:	EQUIPMENT INFO:
Barometric Pressure, In.Hg	Meter No.
Assumed Stack Pressure, iwg	Meter Yd
Assumed Moisture, %	Δ H @
Assumed Molecular Weight	Pitot ID, Cp
Assumed Stack Temperature	O_2/CO_2 Method
Assumed Meter Temperature	Teflon connecting line? (Y/N)
Average ΔP	Probe material
Stack diameter/area	Probe length
Sample time, min/point	Nozzle material
ΔH = ____ x ΔP	Nozzle diameter, in.
	Filter No. QT-63
	Filter material quartz

IMPINGER WEIGHTS:

Imp #	Contents	Wt (end)		Wt (start)		Wt gain
1	KCl	675.6	-	622.2	=	
2	KCl	✓	-	628.5	=	
3	KCl	✓	-	664.4	=	
4	$KMnO_4/H_2SO_4$	✓	-	607.8	=	
5	$KMnO_4/H_2SO_4$	✓	-	654.4	=	
6	$KMnO_4/H_2SO_4$	✓	-	604.5	=	
7	$KMnO_4/H_2SO_4$	✓	-	671.9	=	
8	SG	✓	-	795.8	=	
					Total	

COMMENTS:

LEAK CHECKS:

	CFM	Vacuum	Pitot	Initial
Pre-test	.003	13"		PA
Post-test				

PRE-TEST METER CALIBRATION CHECK:

	Time	ΔH	Meter Reading	Meter In/Out
Start				/
Stop				/
Avg/total				

SAMPLE POINT	TIME (clock)	METER VOLUME ft³	ΔP iwg	ΔH iwg	TEMPERATURES, F: STACK	PROBE	FILTER	METER in	METER out	IMP OUT		O_2	VAC.	STATIC PRESS. iwg	CHAIN OF CUSTODY INFORMATION
															Impingers Loaded ✓
															Impingers Recovered ✓
															Filter Loaded ✓
															Filter Recovered ✓
															Probe Wash PA
															TEST AVERAGES/TOTALS
															Calculated by:
															Checked by:
															Δ P, iwg
															Δ H, iwg
															Sample vol, acf
															Stack temp, F
															Meter temp, F
															Static press, iwg
															Water collected, g
															O_2, %
															Sample time, min

FOSSIL ENERGY RESEARCH CORPORATION

Ontario Hydro Mercury Speciation Sampling Data Sheet

FACILITY Navajo Generating Station UNIT 3 TEST NO. 1-Inlet-Hg METHOD OH PAGE 1 OF 2

SAMPLE LOCATION Scrubber Inlet TEST CONDITION AMBIENT TEMPERATURE

OPERATOR/ASSISTANT PA / J.B METER VOLUME START/END 508.003 / 1576.750 DATE 10/25/99

PRE-TEST DATA:

Barometric Pressure, In.Hg	25.8
Assumed Stack Pressure, iwg	+3
Assumed Moisture, %	8.7
Assumed Molecular Weight	29.3
Assumed Stack Temperature	311
Assumed Meter Temperature	85
Average ΔP	.49
Stack diameter/area	22×22'
Sample time, min/point	5
ΔH = 1.8 × ΔP	

EQUIPMENT INFO:

Meter No.	FERC0-1
Meter Yd	1.001
ΔH @	.57
Pitot ID, Cp	S-type
O_2/CO_2 Method	portable
Teflon connecting line? (Y/N)	Y
Probe material	teflon
Probe length	16'
Nozzle material	glass
Nozzle diameter, in.	.224
Filter No.	QT-60
Filter material	quartz

IMPINGER WEIGHTS:

Imp #	Contents	Wt (end)		Wt (start)		Wt gain
1	KCl	745.5	-	622.5	=	123
2	KCl	620.3	-	605.7	=	14.6
3	KCl	673.2	-	672.7	=	0.5
4	$KMnO_4/H_2SO_4$	592.3	-	590.1	=	2.2
5	$KMnO_4/H_2SO_4$	639.5	-	639.4	=	0.1
6	$KMnO_4/H_2SO_4$	604.9	-	603.4	=	1.5
7	$KMnO_4/H_2SO_4$	679.0	-	678.5	=	0.5
8	SG	796.9	-	768.8	=	28.1
		-Stand line rinse			Total	120.5

COMMENTS: silica gel OK

LEAK CHECKS:

	CFM	Vacuum	Pitot	Initial
Pre-test	.008	14"	✓	PA
Post-test	.004	11"	✓	PA

PRE-TEST METER CALIBRATION CHECK:

	Time	ΔH	Meter Reading	Meter In/Out
Start				/
Stop				/
Avg/total				

cl wt 294.8/295.0

SAMPLE POINT	TIME (clock)	METER VOLUME ft³	ΔP iwg	ΔH iwg	TEMPERATURES, F STACK	PROBE	LINE ~~FILTER~~	METER in	METER out	IMP OUT		O_2	VAC.	STATIC PRESS. iwg
A 4	15:07	508.003	.7	1.26	327	266	286	76	77	60		7.1	7.5	
3	12	511.02	.71	1.28	329	262	280	76	77	53		6.8	7.5	
2	17	514.05	.54	.97	328	262	276	77	77	53		6.4	7.0	
1	22	516.79	.58	1.04	323	256	260	77	77	55		6.7	7.0	
–	27	519.509												
B 4	1531	519.509	.63	1.19	327	258	279	76	76	58		6.6	7.0	
3	36	522.3	.66	1.19	323	256	282	77	77	56		6.7	7.5	
2	41	525.23	.61	1.1	325	259	273	79	77	58		6.7	7.0	
1	46	528.07	.50	0.9	317	259	282	80	77	60		6.8	6.5	
	51	530.638												
C 4	1555	530.638	.47	.85	314	261	286	79	77	61		6.8	6.0	
3	1600	533.24	.65	1.17	318	257	281	81	77	60		6.0	7.5	
2	05	536.0	.81	1.46	326	262	290	82	78	60		7.0	8.5	4.1
1	10	539.18	.45	.81	304	262	293	83	78	61		6.9	6.0	
	15	541.730												

CHAIN OF CUSTODY INFORMATION

- Impingers Loaded
- Impingers Recovered
- Filter Loaded
- Filter Recovered
- Probe Wash

TEST AVERAGES/TOTALS

- Calculated by: MM
- Checked by: ✓ MM
- Δ P, iwg .6237 ✓
- Δ H, iwg 1.13 ✓
- Sample vol, acf 68.747 ✓
- Stack temp, F 314.0 ✓
- Meter temp, F 79.1 ✓
- Static press, iwg 4.1 ✓
- Water collected, g 120.5 ✓
- O_2, % ~~6.44~~ 6.23 ✓
- Sample time, min 120

FOSSIL ENERGY RESEARCH CORPORATION
Ontario Hydro Mercury Speciation Sampling Data Sheet

FACILITY Navajo UNIT ____ TEST NO. 1 Inlet METHOD ____ PAGE 2 OF 2
SAMPLE LOCATION Inlet TEST CONDITION ____ AMBIENT TEMPERATURE ____
OPERATOR/ASSISTANT ____ METER VOLUME START/END ____ / ____ DATE 10/25/99

See Page 1

PRE-TEST DATA:	EQUIPMENT INFO:
Barometric Pressure, In.Hg	Meter No.
Assumed Stack Pressure, iwg	Meter Yd
Assumed Moisture, %	Δ H @
Assumed Molecular Weight	Pitot ID, Cp
Assumed Stack Temperature	O_2/CO_2 Method
Assumed Meter Temperature	Teflon connecting line? (Y/N)
Average ΔP	Probe material
Stack diameter/area	Probe length
Sample time, min/point	Nozzle material
ΔH = ____ x ΔP	Nozzle diameter, in.
	Filter No.
	Filter material

IMPINGER WEIGHTS:

Imp #	Contents	Wt (end)		Wt (start)		Wt gain
1			-		=	
2			-		=	
3			-		=	
4			-		=	
5			-		=	
6			-		=	
7			-		=	
8			-		=	
					Total	

COMMENTS:

LEAK CHECKS:

	CFM	Vacuum	Pitot	Initial
Pre-test				
Post-test				

PRE-TEST METER CALIBRATION CHECK:

	Time	ΔH	Meter Reading	Meter In/Out
Start				/
Stop				/
Avg/total				

SAMPLE POINT	TIME (clock)	METER VOLUME ft³	ΔP iwg	ΔH iwg	TEMPERATURES, F: STACK	PROBE	LINE ~~FILTER~~	METER in	METER out	IMP OUT		O_2	VAC.	STATIC PRESS. iwg	CHAIN OF CUSTODY INFORMATION
D 4	1614	541.738	.53	.85	313	256	294	81	77	64		6.3	6.5		Impingers Loaded
3	24	544.4	.79	1.33	309	256	295	82	78	59		5.7	8.5		Impingers Recovered
2	29	547.34	.66	1.19	307	258	294	83	78	59		5.8	8.0		Filter Loaded
1	34	550.4	.58	1.04	305	262	295	84	78	60		5.7	7.5		Filter Recovered
-	39	553.134													Probe Wash
E 4	1643	553.134	.65	1.17	310	258	296	82	78	61		5.9	7.5		
3	48	556.05	.74	1.33	306	260	295	83	79	60		5.6	8.5		
2	53	559.14	.66	1.19	303	259	295	84	78	61		5.7	8.0		**TEST AVERAGES/TOTALS**
1	58	562.12	.53	.95	300	260	295	84	78	61		5.9	7.0		Calculated by:
-	17:03	564.815													Checked by:
															Δ P, iwg
F 4	1706	564.815	.61	1.1	308	256	295	81	78	60		5.7	7.0		Δ H, iwg
3	11	567.63	.7	1.26	306	260	295	82	78	58		5.8	8.5		Sample vol, acf
2	16	570.68	.74	1.33	304	255	295	83	78	59		5.7	9.0		Stack temp, F
1	21	573.85	.6	1.08	301	254	295	83	78	60		5.7	8.5		Meter temp, F
-	26	576.750													Static press, iwg
															Water collected, g
															O_2, %
															Sample time, min

FOSSIL ENERGY RESEARCH CORPORATION
Ontario Hydro Mercury Speciation Sampling Data Sheet

FACILITY Navajo UNIT 3 TEST NO. 2 INLET Hg METHOD OH PAGE 1 OF 2
SAMPLE LOCATION INLET TEST CONDITION AMBIENT TEMPERATURE
OPERATOR/ASSISTANT PA / JB METER VOLUME START/END 580.390 / 647.919 DATE 10/26/99

PRE-TEST DATA:

Barometric Pressure, In.Hg	25.8
Assumed Stack Pressure, iwg	
Assumed Moisture, %	
Assumed Molecular Weight	
Assumed Stack Temperature	
Assumed Meter Temperature	
Average ΔP	
Stack diameter/area	
Sample time, min/point	5
ΔH = 1.8 x ΔP	

All Test 1

EQUIPMENT INFO:

Meter No.	FERCO #1
Meter Yd	1.001
Δ H @	
Pitot ID, Cp	
O_2/CO_2 Method	Portable
Teflon connecting line? (Y/N)	Y
Probe material	T
Probe length	16'
Nozzle material	Quartz
Nozzle diameter, in.	.224
Filter No.	QT-61
Filter material	quartz

IMPINGER WEIGHTS:

Imp #	Contents	Wt (end)		Wt (start)		Wt gain
1	KCl	722.6	-	597.6	=	125
2	KCl	605.2	-	591.7	=	13.5
3	KCl	603.3	-	601.7	=	1.6
4	HNO_3/H_2O_2	611.8	-	607.0	=	4.8
5	$KMnO_4/H_2SO_4$	618.2	-	617.7	=	0.5
6	$KMnO_4/H_2SO_4$	628.8	-	628.6	=	0.2
7	$KMnO_4/H_2SO_4$	616.9	-	616.9	=	0
8	SG	821.5	-	800.9	=	20.6
		-50 ml liquid			Total	116.2

COMMENTS: Silica gel OK

LEAK CHECKS:

	CFM	Vacuum	Pitot	Initial
Pre-test	.004	15"	✓	PA
Post-test	.004	12"	✓	PA

PRE-TEST METER CALIBRATION CHECK:

	Time	ΔH	Meter Reading	Meter In/Out
Start				/
Stop				/
Avg/total				

SAMPLE POINT	TIME (clock)	METER VOLUME ft³	ΔP iwg	ΔH iwg	TEMPERATURES, F STACK	PROBE	Lsup ~~FILTER~~	METER in	METER out	IMP OUT		O_2	VAC.	STATIC PRESS. iwg
A 4	0755	580.390	.7	1.26	320	256	268	56	55	51		6.7	6	
3	0800	583.48	.67	1.21	320	256	279	57	55	49		6.1	5	
2	05	586.4	.56	1.01	320	260	282	58	56	49		6.0	5	
1	10	589.1	.57	1.03	316	259	285	59	56	50		6.3	5	
—	15	591.816												
B 4	0819	591.816	.62	1.12	314	255	289	60	57	52		6.4	5	
3	24	594.62	.62	1.12	314	260	290	61	58	51		5.9	5	
2	29	597.5	.59	1.06	318	259	291	62	58	52		6.0	5	
1	34	600.22	.47	.85	306	254	292	63	59	53		6.2	4.5	
—	39	602.755												
C 4	0843	602.756	.63	1.13	307	259	292	63	60	54		6.0	5	
3	48	605.6	.78	1.40	307	257	293	64	61	54		5.7	6	
2	53	608.76	.65	1.17	308	254	293	66	61	54		5.9	5.5	
1	58	611.75	.47	.85	305	259	293	67	61	55		6.3	4.5	
—		614.305												

CHAIN OF CUSTODY INFORMATION

Impingers Loaded	TS
Impingers Recovered	TS
Filter Loaded	TS
Filter Recovered	TS
Probe Wash	PA

TEST AVERAGES/TOTALS

Calculated by:	MM
Checked by:	MM
Δ P, iwg	.5984 ✓
Δ H, iwg	1.08 ✓
Sample vol, acf	67.525 ✓
Stack temp, F	304.5
Meter temp, F	~~304.5~~ 64.5
Static press, iwg	4.1
Water collected, g	116.2 ✓
O_2, %	5.88
Sample time, min	120

FOSSIL ENERGY RESEARCH CORPORATION

Ontario Hydro Mercury Speciation Sampling Data Sheet

FACILITY _____ UNIT _____ TEST NO. 2 INLET METHOD OH PAGE 2 OF 2

SAMPLE LOCATION INLET TEST CONDITION _____ AMBIENT TEMPERATURE _____

OPERATOR/ASSISTANT _____ METER VOLUME START/END _____ / _____ DATE 10/26/99

PRE-TEST DATA:	EQUIPMENT INFO:
Barometric Pressure, In.Hg	Meter No.
Assumed Stack Pressure, iwg	Meter Yd
Assumed Moisture, %	Δ H @
Assumed Molecular Weight	Pitot ID, Cp
Assumed Stack Temperature	O_2/CO_2 Method
Assumed Meter Temperature	Teflon connecting line? (Y/N)
Average ΔP	Probe material
Stack diameter/area	Probe length
Sample time, min/point	Nozzle material
ΔH = _____ x ΔP	Nozzle diameter, in.
	Filter No.
	Filter material

IMPINGER WEIGHTS:

Imp #	Contents	Wt (end)		Wt (start)		Wt gain
1			-		=	
2			-		=	
3			-		=	
4			-		=	
5			-		=	
6			-		=	
7			-		=	
8			-		=	
					Total	

COMMENTS:

LEAK CHECKS:

	CFM	Vacuum	Pitot	Initial
Pre-test				
Post-test				

PRE-TEST METER CALIBRATION CHECK:

	Time	ΔH	Meter Reading	Meter In/Out
Start				/
Stop				/
Avg/total				

SAMPLE POINT	TIME (clock)	METER VOLUME ft³	ΔP iwg	ΔH iwg	TEMPERATURES, F: STACK	PROBE	UNC ~~FILTER~~	METER in	METER out	IMP OUT		O_2	VAC.	STATIC PRESS. iwg	CHAIN OF CUSTODY INFORMATION
D 4	0906	614.309	.55	.99	303	255	293	66	63	57		6.0 ✓	5		Impingers Loaded
3	11	617.205	.7	1.26	299	257	294	67	63	56		5.6	5.5		Impingers Recovered
2	16	620.000	.62	1.12	299	260	294	69	63	57		5.6	5		Filter Loaded
1	21	622.89	.59	.95	297	257	294	71	65	58		5.7	5		Filter Recovered
		625.623													Probe Wash
E 4	0930	625.623	.55	.99	300	255	295	72	67	61		5.4	5		TEST AVERAGES/TOTALS
3	35	628.55	.66	1.19	299	260	295	72	67	60		5.4	5		Calculated by:
2	40	631.25	.6	1.08	293	258	295	73	67	61		5.5	5		Checked by:
1	45	634.05	.45	.81	284	259	295	73	68	62		5.9	4.5		Δ P, iwg
	50	636.579													Δ H, iwg
															Sample vol, acf
F 4	0955	636.582	.59	1.06	298	256	295	71	68	63		5.5	5		Stack temp, F
3	1000	639.37	.64	1.15	297	261	297	74	69	64		5.6 ✓	5		Meter temp, F
2	05	642.24	.64	1.15	299	259	297	76	71	66		5.5	6		Static press, iwg
1	10	645.13	.56	1.008	292	260	296	76	71	67		5.7	5		Water collected, g
	15	647.919													O_2, %
															Sample time, min

FOSSIL ENERGY RESEARCH CORPORATION

Ontario Hydro Mercury Speciation Sampling Data Sheet

FACILITY Navajo Generating Station | UNIT 3 | TEST NO. 3-Inlet-Hg | METHOD OH | PAGE 1 OF 2

SAMPLE LOCATION INLET | TEST CONDITION | AMBIENT TEMPERATURE 74

OPERATOR/ASSISTANT PA/JB | METER VOLUME START/END 649.462 / 724.629 | DATE 10/26/99

PRE-TEST DATA:		EQUIPMENT INFO:	
Barometric Pressure, In.Hg		Meter No.	Ferco #1
Assumed Stack Pressure, Iwg		Meter Yd	1.001
Assumed Moisture, %		ΔH @	2
Assumed Molecular Weight		Pitot ID, Cp	
Assumed Stack Temperature		O_2/CO_2 Method	
Assumed Meter Temperature		Teflon connecting line? (Y/N)	Y
Average ΔP		Probe material	Tef
Stack diameter/area		Probe length	
Sample time, min/point	5	Nozzle material	Quartz
ΔH = 2.0 x ΔP		Nozzle diameter, in.	
		Filter No.	QT-62
		Filter material	quartz

IMPINGER WEIGHTS:

Imp #	Contents	Wt (end)		Wt (start)		Wt gain
1	KCl	740.3	-	600.7	=	139.6
2	KCl	615.7	-	599.4	=	16.3
3	KCl	713.6	-	711.6	=	2
4	$KMnO_4/H_2SO_4$	624.0	-	620.8	=	3.2
5	$KMnO_4/H_2SO_4$	589.3	-	589.1	=	0.2
6	$KMnO_4/H_2SO_4$	544.9	-	545.0	=	-0.1
7	$KMnO_4/H_2SO_4$	735.2	-	734.9	=	0.3
8	SG	902.2	-	885.9	=	16.3
					Total	127.8

COMMENTS: Sliced gel OK

LEAK CHECKS:

	CFM	Vacuum	Pitot	Initial
Pre-test	.002	15"	✓	PA
Post-test	.003	10"	✓	PA

PRE-TEST METER CALIBRATION CHECK:

	Time	ΔH	Meter Reading	Meter In/Out
Start				/
Stop				/
Avg/total				

SAMPLE POINT	TIME (clock)	METER VOLUME ft³	ΔP Iwg	ΔH Iwg	TEMPERATURES, F: STACK	PROBE	UNF ~~FILTER~~	METER In	METER out	IMP OUT		O_2	VAC.	STATIC PRESS. Iwg
A 4	11:37	649.462	.77	1.54	327	255	249	75	75	62		6.5 ✓	6	
3	42	652.81	.68	1.36	327	256	264	75	75	45		5.9	6	
2	47	656.0	.6	1.2	328	259	269	78	76	45		6.2	5.5	
1	52	659.11	.61	1.22	328	256	270	80	77	45		6.3 ✓	5.5	
-	57	662.07												
B 4	1200	662.07	.7	1.4	321	259	272	80	78	51		6.3	5.5	
3	05	665.25	.68	1.36	323	257	272	82	79	47		6.4	5.5	
2	10	668.4	.6	1.2	324	257	269	84	80	47		6.0 ✓	5	
1	15	671.46	.48	.96	314	255	267	83	80	47		6.5 ✓	5	
-	20	674.236												
C 4	1224	674.236	.65	1.3	314	257	272	84	82	56		6.6	5	
3	29	677.25	.77	1.54	316	257	272	85	83	49		5.9	6	
2	34	680.61	.70	1.40	315	255	272	87	85	49		6.0 ✓	6	
1	39	683.46	.44	.88	308	256	271	88	86	50		6.6	4.5	
-	44	686.639												

CHAIN OF CUSTODY INFORMATION

Impingers Loaded	AB
Impingers Recovered	AB
Filter Loaded	AB
Filter Recovered	AB
Probe Wash	PA/JB

TEST AVERAGES/TOTALS

Calculated by:	MM
Checked by:	✓MM
Δ P, iwg	~~.403~~ .6384 ✓
Δ H, iwg	1.29 ✓
Sample vol, acf	75.167 ✓
Stack temp, F	312.8 ✓
Meter temp, F	87.5 ✓
Static press, iwg	4.1 ✓
Water collected, g	127.8
O_2, %	6.00
Sample time, min	120

FOSSIL ENERGY RESEARCH CORPORATION
Ontario Hydro Mercury Speciation Sampling Data Sheet

FACILITY _____ UNIT 3 TEST NO. 3 INLET Hg METHOD OH PAGE 2 OF 2

SAMPLE LOCATION INLET TEST CONDITION _____ AMBIENT TEMPERATURE _____

OPERATOR/ASSISTANT _____ METER VOLUME START/END _____ / _____ DATE 10/26/99

PRE-TEST DATA:	EQUIPMENT INFO:
Barometric Pressure, In.Hg	Meter No.
Assumed Stack Pressure, iwg	Meter Yd
Assumed Moisture, %	Δ H @
Assumed Molecular Weight	Pitot ID, Cp
Assumed Stack Temperature	O_2/CO_2 Method
Assumed Meter Temperature	Teflon connecting line? (Y/N)
Average ΔP	Probe material
Stack diameter/area	Probe length
Sample time, min/point	Nozzle material
ΔH = _____ x ΔP	Nozzle diameter, in.
	Filter No.
	Filter material

IMPINGER WEIGHTS:

Imp #	Contents	Wt (end)		Wt (start)		Wt gain
1			-		=	
2			-		=	
3			-		=	
4			-		=	
5			-		=	
6			-		=	
7			-		=	
8			-		=	
					Total	

COMMENTS:

LEAK CHECKS:

	CFM	Vacuum	Pitot	Initial
Pre-test				
Post-test				

PRE-TEST METER CALIBRATION CHECK:

	Time	ΔH	Meter Reading	Meter In/Out
Start				/
Stop				/
Avg/total				

SAMPLE POINT	TIME (clock)	METER VOLUME ft³	ΔP iwg	ΔH iwg	TEMPERATURES, F STACK	PROBE	~~FILTER~~ Line	METER In	METER out	IMP OUT		O_2	VAC.	STATIC PRESS. iwg	CHAIN OF CUSTODY INFORMATION
D 4	1247	686.639	.58	1.16	311	256	271	88	87	57		6.6	5		
3	52	689.52	.7	1.4	308	257	270	88	88	51		5.6	5.5		Impingers Loaded
2	57	692.65	.68	1.36	305	256	269	89	90	51		5.6	5.5		Impingers Recovered
1	1302	695.89	.55	1.1	303	255	270	91	91	51		5.6	5.5		Filter Loaded
—	07	699.120													Filter Recovered
															Probe Wash
E 4	1310	699.120	.6	1.2	311	256	269	93	93	58		5.9	5.5		
3	15	702.19	.72	1.44	305	260	266	93	94	54		5.6	6		TEST AVERAGES/TOTALS
2	20	705.47	.68	1.36	304	257	266	94	96	54		5.9	6		Calculated by:
1	25	708.75	.51	1.02	299	258	267	97	97	54		5.6	5		Checked by:
—	30	711.629													Δ P, iwg
															Δ H, iwg
F 4	1337	711.629	.66	1.32	308	260	266	95	97	57		5.8	5.5		Sample vol, acf
3	1338	714.77	.72	1.44	308	258	269	97	100	56		5.6	6.0		Stack temp, F
2	43	718.01	.74	1.48	304	262	268	97	98	55		5.5	6.0		Meter temp, F
1	48	721.32	.6	1.2	303	262	271	105	104	60		5.9	6.0		Static press, iwg
	53	724.629													Water collected, g
															O_2, %
															Sample time, min

FOSSIL ENERGY RESEARCH CORPORATION
Ontario Hydro Mercury Speciation Sampling Data Sheet

FACILITY Navajo Generating Station UNIT 3 TEST NO. 1-Stack-1kg METHOD OH PAGE 1 OF 1
SAMPLE LOCATION Stack TEST CONDITION AMBIENT TEMPERATURE
OPERATOR/ASSISTANT DW/LP METER VOLUME START/END / DATE 10-25-99

PRE-TEST DATA:	EQUIPMENT INFO:
Barometric Pressure, In.Hg	Meter No.
Assumed Stack Pressure, iwg	Meter Yd
Assumed Moisture, %	Δ H @
Assumed Molecular Weight	Pitot ID, Cp
Assumed Stack Temperature	O_2/CO_2 Method
Assumed Meter Temperature	Teflon connecting line? (Y/N)
Average ΔP	Probe material
Stack diameter/area	Probe length
Sample time, min/point	Nozzle material
ΔH = _____ x ΔP	Nozzle diameter, in.
	Filter No.
	Filter material quartz

IMPINGER WEIGHTS:

Imp #	Contents	Wt (end)		Wt (start)		Wt gain
1	KCl	674.2	-	625.4	=	
2	KCl	✓	-	622.2	=	
3	KCl	✓	-	671.7	=	
4	HNO_3/H_2O_2	✓	-	599.9	=	
5	$KMnO_4/H_2SO_4$	✓	-	696.2	=	
6	$KMnO_4/H_2SO_4$	✓	-	598.6	=	
7	$KMnO_4/H_2SO_4$	✓	-	724.0	=	
8	SG	✓	-	819.0	=	
		50 l [illegible]			Total	

COMMENTS:

LEAK CHECKS:

	CFM	Vacuum	Pitot	Initial
Pre-test				
Post-test				

PRE-TEST METER CALIBRATION CHECK:

	Time	ΔH	Meter Reading	Meter In/Out
Start				/
Stop				/
Avg/total				

SAMPLE POINT	TIME (clock)	METER VOLUME ft^3	ΔP iwg	ΔH iwg	TEMPERATURES, F: STACK	PROBE	FILTER	METER in	METER out	IMP OUT		O_2	VAC.	STATIC PRESS. iwg
		1100												
		1400												

Field Blank

CHAIN OF CUSTODY INFORMATION

- Impingers Loaded
- Impingers Recovered
- Filter Loaded
- Filter Recovered
- Probe Wash

TEST AVERAGES/TOTALS

- Calculated by:
- Checked by:
- Δ P, iwg
- Δ H, iwg
- Sample vol, acf
- Stack temp, F
- Meter temp, F
- Static press, iwg
- Water collected, g
- O_2, %
- Sample time, min

FOSSIL ENERGY RESEARCH CORPORATION

Ontario Hydro Mercury Speciation Sampling Data Sheet

FACILITY: Navajo Generating Station | UNIT: 3 | TEST NO: Stack-Hg | METHOD: OH | PAGE 1 OF 2

SAMPLE LOCATION: Stack | TEST CONDITION: | AMBIENT TEMPERATURE:

OPERATOR/ASSISTANT: Dave Woody L.P. | METER VOLUME START/END: / | DATE: 10-25-99

PRE-TEST DATA:

Barometric Pressure, In.Hg	25.30
Assumed Stack Pressure, iwg	.84
Assumed Moisture, %	14
Assumed Molecular Weight	27
Assumed Stack Temperature	122
Assumed Meter Temperature	75
Average ΔP	.53
Stack diameter/area	
Sample time, min/point	10/12
ΔH = 2.0 x ΔP	

EQUIPMENT INFO:

Meter No.	3-cus
Meter Yd	.980
ΔH @	1.711
Pitot ID, Cp	.84 # 6
O_2/CO_2 Method	Port O2
Teflon connecting line? (Y/N)	Y
Probe material	glass
Probe length	11'
Nozzle material	glass
Nozzle diameter, in.	.227
Filter No.	83UP-117
Filter material	quartz

IMPINGER WEIGHTS:

Imp #	Contents	Wt (end)		Wt (start)		Wt gain
1	KCl	816.4	-	603.7	=	212.7
2	KCl	625.3	-	593.7	=	31.6
3	KCl	587.0	-	580.6	=	6.4
4	$KMnO_4/H_2O_2$	640.5	-	638.5	=	2
5	$KMnO_4/H_2SO_4$	687.5	-	688.2	=	-.7
6	$KMnO_4/H_2SO_4$	635.7	-	635.5	=	.2
7	$KMnO_4/H_2SO_4$	716.5	-	716.9	=	-.4
8	SG	878.5	-	862.9	=	15.6
				Total		217.4

.50 ml line rinse

COMMENTS: Silica gel OK

LEAK CHECKS:

	CFM	Vacuum	Pitot	Initial
Pre-test	.005	10	ok	RW
Post-test	.005	10	ok	RW

PRE-TEST METER CALIBRATION CHECK:

	Time	ΔH	Meter Reading	Meter In/Out
Start				/
Stop				/
Avg/total				

SAMPLE POINT	TIME (clock)	METER VOLUME ft³	ΔP iwg	ΔH iwg	TEMPERATURES, F: STACK	PROBE	FILTER	Line	METER in	METER out	IMP OUT		O_2	VAC.	STATIC PRESS. iwg
S 3	1500	685.865	.60	1.2	124	260	258	264	89	76	ice		6.2	5	
	1505	689.2	.60	1.2	124	260	259	263	90	76	60		6.2	5	+.83
2	1510	692.5	.55	1.1	120	260	260	261	95	77	60		6.0	5	
	1515	695.5	.54	1.1	120	262	259	258	97	80	6.0		6.0	5	
1	1520	698.6	.45	.90	119	259	260	257	97	78	59		6.0	5	
	1525	701.4	.45	.90	119	258	258	258	97	78	58		6.0	5	
Stop	1530	704.200													
3	1540	704.955	.58	1.15	120	261	257	253	95	79	58		6.0	5	
	1545	708.1	.58	1.15	120	263	264	265	96	80	57		6.1	5	
2	1550	711.5	.56	1.1	120	263	263	260	97	80	58		6.0	5	
	1555	714.8	.56	1.1	120	264	259	260	97	80	58		6.0	5	
1	1600	717.9	.40	.80	119	262	258	266	97	81	57			5	
	1605	720.7	.40	.80	119	265	255	261	97	81	57			5	
Stop	1610	723.700													

CHAIN OF CUSTODY INFORMATION

Impingers Loaded	✓
Impingers Recovered	✓
Filter Loaded	✓
Filter Recovered	✓
Probe Wash	RW

TEST AVERAGES/TOTALS

Calculated by:	MM
Checked by:	MM
ΔP, iwg	.523 ✓
ΔH, iwg	1.09 ✓
Sample vol, acf	76.969 ✓
Stack temp, F	120.3 ✓
Meter temp, F	87.6 ✓
Static press, iwg	.83 ✓
Water collected, g	217.4 ✓
O_2, %	5.96 ✓
Sample time, min	120 ✓

.08 1.04 120

FOSSIL ENERGY RESEARCH CORPORATION
Ontario Hydro Mercury Speciation Sampling Data Sheet

FACILITY NGS UNIT 3 TEST NO. 1-Stack-HG METHOD PAGE 2 OF 2
SAMPLE LOCATION Stack TEST CONDITION AMBIENT TEMPERATURE
OPERATOR/ASSISTANT D-W L.P METER VOLUME START/END / DATE 10-25-95

PRE-TEST DATA:	EQUIPMENT INFO:
Barometric Pressure, In.Hg	Meter No.
Assumed Stack Pressure, iwg	Meter Yd
Assumed Moisture, %	ΔH @
Assumed Molecular Weight	Pitot ID, Cp
Assumed Stack Temperature	O_2/CO_2 Method
Assumed Meter Temperature	Teflon connecting line? (Y/N)
Average ΔP	Probe material
Stack diameter/area	Probe length
Sample time, min/point	Nozzle material
ΔH = _____ x ΔP	Nozzle diameter, in.
	Filter No.
	Filter material

See page 2 OK

IMPINGER WEIGHTS:

Imp #	Contents	Wt (end)		Wt (start)		Wt gain
1			-		=	
2			-		=	
3			-		=	
4			-		=	
5			-		=	
6			-		=	
7			-		=	
8			-		=	
					Total	

COMMENTS:

LEAK CHECKS:

	CFM	Vacuum	Pitot	Initial
Pre-test				
Post-test				

PRE-TEST METER CALIBRATION CHECK:

	Time	ΔH	Meter Reading	Meter In/Out
Start				/
Stop				/
Avg/total				

SAMPLE POINT	TIME (clock)	METER VOLUME ft³	ΔP iwg	ΔH iwg	TEMPERATURES, F STACK	PROBE	FILTER	Line	METER in	METER out	IMP OUT		O_2	VAC.	STATIC PRESS. iwg
N-3	1620	723.800	.58	1.15	120	258	270	260	90	81	57		6.0	5	
	1625	727.4	.58	1.15	120	257	272	259	94	81	57		5.8	6	
2	1630	730.6	.56	1.20	120	262	275	260	96	80	57		5.8	6	
	1635	733.9	.56	1.20	120	263	271	262	96	80	57		5.8	6	
1	1640	737.5	.44	1.0	120	262	275	269	96	80	56		5.8	5	
	1645	740.5	.44	1.0	120	263	273	270	96	80	56		5.9	5	
Stop	1650	743.735													
W-3	1657	743.900	.62	1.34	120	262	274	250	95	80	57		5.9	5	
	1702	747.2	.62	1.34	120	262	272	255	96	80	54		5.9	5	
2	1707	751.0	.58	1.25	121	263	273	250	97	80	55		5.9	5	
	1712	754.6	.55	1.20	121	262	270	252	96	81	55		5.9	5	
1	1717	758	.41	.90	121	263	259	270	97	82	55		5.9	5	
	1722	761.5	.41	.90	121	260	257	272	97	82	55		5.9	5	
End	1727	763.854													

CHAIN OF CUSTODY INFORMATION

- Impingers Loaded
- Impingers Recovered
- Filter Loaded
- Filter Recovered
- Probe Wash

TEST AVERAGES/TOTALS

- Calculated by:
- Checked by:
- ΔP, iwg
- ΔH, iwg
- Sample vol, acf
- Stack temp, F
- Meter temp, F
- Static press, iwg
- Water collected, g
- O_2, %
- Sample time, min

FOSSIL ENERGY RESEARCH CORPORATION

Ontario Hydro Mercury Speciation Sampling Data Sheet

FACILITY Navajo Generating Station UNIT 3 TEST NO. 2-Stack-Hg METHOD OH PAGE 1 OF 2

SAMPLE LOCATION Stack TEST CONDITION AMBIENT TEMPERATURE

OPERATOR/ASSISTANT D.W. L.P. METER VOLUME START/END / DATE 10-26-99

PRE-TEST DATA:

Barometric Pressure, In.Hg	25.3
Assumed Stack Pressure, iwg	.84
Assumed Moisture, %	14
Assumed Molecular Weight	27
Assumed Stack Temperature	120
Assumed Meter Temperature	85
Average ΔP	.52
Stack diameter/area	34'-9"
Sample time, min/point	10/12
ΔH = _____ x ΔP	

EQUIPMENT INFO:

Meter No.	3-WCS
Meter Yd	.980
ΔH @	1.711
Pitot ID, Cp	#6 - .84
O_2/CO_2 Method	Port. O2
Teflon connecting line? (Y/N)	Y
Probe material	glass
Probe length	11'
Nozzle material	glass
Nozzle diameter, in.	.227
Filter No.	830P-118
Filter material	quartz

IMPINGER WEIGHTS:

Imp #	Contents	Wt (end)	Wt (start)	Wt gain
1	KCl	761.8	626.4	135.4
2	KCl	694.6	618.2	76.4
3	KCl	722.4	692.7	29.7
4	$NaNO_3/H_2O_2$	617.3	606.3	11
5	$KMnO_4/H_2SO_4$	711.2	707.7	3.5
6	$KMnO_4/H_2SO_4$	597.3	595.9	1.4
7	$KMnO_4/H_2SO_4$	712.8	713.9	-1.1
8	SG	836.4	819.6	16.8
		-50 ml trimmer	Total	223.1

COMMENTS: Silica gel OK ✓

LEAK CHECKS:

	CFM	Vacuum	Pitot	Initial
Pre-test	.01	12"	ok	DW
Post-test	.008	10	ok	m

PRE-TEST METER CALIBRATION CHECK:

	Time	ΔH	Meter Reading	Meter In/Out
Start				/
Stop				/
Avg/total				

SAMPLE POINT	TIME (clock)	METER VOLUME ft³	ΔP iwg	ΔH iwg	TEMPERATURES, F STACK	PROBE	Line FILTER		METER In	METER out	IMP OUT		O_2	VAC.	STATIC PRESS. iwg
W-3	755	765.050	.60	1.25	121	263	257	253	79	65	ICE		6.0	7	
	800	768.7	.60	1.25	121	260	257	260	82	66	57		6.0	7	
2	805	772.0	.57	1.2	121	257	265	260	86	68	57		5.8	7	
	810	775.3	.57	1.2	121	257	263	262	87	69	56		5.8	7	.84
1	815	778.6	.42	.88	121	262	270	268	88	69	56		5.7	7	
	820	781.5	.42	.88	121	263	271	262	89	69	56		5.7	7	
Stop	825	784.295													
N-3	830	784.378	.60	1.25	121	261	250	257	85	70	56		5.8	7	
	835	787.4	.60	1.25	121	260	255	258	89	71	55		5.8	7	
2	840	791.3	.55	1.15	121	260	257	260	90	72	55		5.9	7	
	845	794.6	.55	1.15	121	260	258	260	91	72	55		5.9	7	
1	850	797.8	.41	.87	120	263	275	259	91	72	55		5.8	7	
	855	800.800	.41	.87	120	263	273	258	91	72	54		5.8	7	
Stop	900	803.756													

CHAIN OF CUSTODY INFORMATION

Impingers Loaded	✓
Impingers Recovered	
Filter Loaded	✓
Filter Recovered	
Probe Wash	

TEST AVERAGES/TOTALS

Calculated by:	MM
Checked by:	✓MM
ΔP, iwg	.5207 ✓
ΔH, iwg	1.05 ✓
Sample vol, acf	76.058 ✓
Stack temp, F	120.4 ✓
Meter temp, F	~~76.058~~ 80.6 ✓
Static press, iwg	.84 ✓
Water collected, g	223.1 ✓
O_2, %	~~5.81~~ 5.82 ✓
Sample time, min	

FOSSIL ENERGY RESEARCH CORPORATION
Ontario Hydro Mercury Speciation Sampling Data Sheet

FACILITY: NGS | UNIT: 3 | TEST NO.: 2 - Stack - HG | METHOD: | PAGE 2 OF 2
SAMPLE LOCATION: Stack | TEST CONDITION: | AMBIENT TEMPERATURE:
OPERATOR/ASSISTANT: D.W L.P | METER VOLUME START/END: / | DATE: 10-26-99

PRE-TEST DATA:	EQUIPMENT INFO:
Barometric Pressure, In.Hg	Meter No.
Assumed Stack Pressure, iwg	Meter Yd
Assumed Moisture, %	ΔH @
Assumed Molecular Weight	Pitot ID, Cp
Assumed Stack Temperature	O_2/CO_2 Method
Assumed Meter Temperature	Teflon connecting line? (Y/N)
Average ΔP	Probe material
Stack diameter/area	Probe length
Sample time, min/point	Nozzle material
ΔH = _____ x ΔP	Nozzle diameter, in.
	Filter No.
	Filter material

IMPINGER WEIGHTS:

Imp #	Contents	Wt (end)		Wt (start)		Wt gain
1			-		=	
2	Seo		-		=	
3			-		=	
4			-		=	
5	Pal		-		=	
6			-		=	
7		Ovc			=	
8			-		=	
					Total	

COMMENTS:

LEAK CHECKS:

	CFM	Vacuum	Pitot	Initial
Pre-test				
Post-test				

PRE-TEST METER CALIBRATION CHECK:

	Time	ΔH	Meter Reading	Meter In/Out
Start				/
Stop				/
Avg/total				

SAMPLE POINT	TIME (clock)	METER VOLUME ft³	ΔP iwg	ΔH iwg	TEMPERATURES, F: STACK	PROBE	Line FILTER		METER In	METER out	IMP OUT		O_2	VAC.	STATIC PRESS. iwg	CHAIN OF CUSTODY INFORMATION
E-3	910	803.500	.60	1.25	120	262	255	260	87	73			5.8	7		Impingers Loaded
	915	807.1	.60	1.25	120	261	257	259	90	73	58		5.8	7		Impingers Recovered
2	920	810.5	.58	1.2	120	262	258	257	92	74	57		5.8	7		Filter Loaded
	925	813.9	.58	1.2	120	263	260	259	93	74	57		5.8	7		Filter Recovered
1	930	817.3	.41	.86	120	262	262	257	92	74	57		5.8	7		Probe Wash
	935	820.1	.41	.86	120	262	263	259	92	74	56		5.8	7		
Stop	940	822.937														
																TEST AVERAGES/TOTALS
S-3	945	823.150	.60	1.25	120	260	267	265	90	73	50		5.8	7		Calculated by:
	950	826.5	.60	1.25	120	263	260	258	92	74	50		5.8	7		Checked by:
2	955	829.9	.55	1.15	120	259	267	257	93	74	50		5.8	7		ΔP, iwg
	1000	833.3	.55	1.15	120	260	263	258	93	74	50		5.8	7		ΔH, iwg
1	1005	836.8	.40	.84	120	269	262	259	94	74	50		5.8	7		Sample vol, acf
	1010	839.4	.40	.84	120	260	263	258	94	74	50		5.8	7		Stack temp, F
end	1015	842.088														Meter temp, F
																Static press, iwg
																Water collected, g
																O_2, %
																Sample time, min

FOSSIL ENERGY RESEARCH CORPORATION
Ontario Hydro Mercury Speciation Sampling Data Sheet

FACILITY Navajo Generating Station UNIT 3 TEST NO. 3-Stack-Hg METHOD OH PAGE 1 OF 2
SAMPLE LOCATION Stack TEST CONDITION AMBIENT TEMPERATURE
OPERATOR/ASSISTANT D.W. L.P. METER VOLUME START/END / DATE 10-26-99

PRE-TEST DATA:

Barometric Pressure, In.Hg	25.3
Assumed Stack Pressure, iwg	.84
Assumed Moisture, %	14
Assumed Molecular Weight	27
Assumed Stack Temperature	120
Assumed Meter Temperature	85
Average ΔP	.52
Stack diameter/area	24' 5"
Sample time, min/point	10/12
ΔH = 2.1 x ΔP	

EQUIPMENT INFO:

Meter No.	3-WCS
Meter Yd	.980
ΔH @	1.711
Pitot ID, Cp	.84 #6
O_2/CO_2 Method	Port 02
Teflon connecting line? (Y/N)	Y
Probe material	glass
Probe length	11'
Nozzle material	glass
Nozzle diameter, in.	.227
Filter No.	830P-119
Filter material	quartz

IMPINGER WEIGHTS:

Imp #	Contents	Wt (end)		Wt (start)		Wt gain
1	KCl	768.1	-	602.2	=	165.9
2	KCl	665.9	-	595.9	=	70
3	KCl	601.2	-	576.3	=	24.9
4	$KMnO_4/H_2SO_4$	657.0	-	648.1	=	8.9
5	$KMnO_4/H_2SO_4$	699.7	-	697.9	=	1.8
6	$KMnO_4/H_2SO_4$	648.0	-	646.3	=	1.7
7	$KMnO_4/H_2SO_4$	713.5	-	713.4	=	0.1
8	SG	894.1	-	878.4	=	15.7
					Total	239.0

COMMENTS: Silicagel OK

LEAK CHECKS:

	CFM	Vacuum	Pitot	Initial
Pre-test	.01	12	ok	RW
Post-test	.01	12	ok	RW

PRE-TEST METER CALIBRATION CHECK:

	Time	ΔH	Meter Reading	Meter In/Out
Start				/
Stop				/
Avg/total				

SAMPLE POINT	TIME (clock)	METER VOLUME ft³	ΔP iwg	ΔH iwg	TEMPERATURES, F STACK	PROBE	Line FILTER		METER In	METER out	IMP OUT		O_2	VAC.	STATIC PRESS. iwg	CHAIN OF CUSTODY INFORMATION
S-3	1130	842.600	.62	1.3	121	262	268	269	79	73	ICE		5.8	7		Impingers Loaded
2	1135	846.1	.62	1.3	121	260	265	262	85	73	55		5.8	7		Impingers Recovered AB
2	1140	849.7	.56	1.2	121	263	270	258	90	73	55		5.8	7		Filter Loaded
	1145	853.0	.56	1.2	121	262	266	259	91	73	55		5.8	7		Filter Recovered AB
1	1150	856.5	.45	.95	121	261	259	260	92	74	55		5.8	7		Probe Wash DW/LP
	1155	859.4	.45	.95	121	261	257	260	92	74	54		5.8	7		
Stop	1200	862.382														
																TEST AVERAGES/TOTALS
3	1205	862.450	.63	1.3	121	258	257	262	89	74	55		5.8	7		Calculated by: MM
	1210	866.1	.63	1.3	121	257	250	264	91	74	54		5.8	7		Checked by: MM
2	1215	869.6	.58	1.2	121	262	257	262	94	76	55		5.8	7		ΔP, iwg .543
	1220	872.9	.58	1.2	121	261	258	261	94	76	55		5.8	7		ΔH, iwg 1.14
1	1225	876.3	.45	.95	121	262	260	260	94	76	55					Sample vol, acf 78.837
	1230	879.1	.45	.95	121	262	259	261	94	76	56					Stack temp, F 121.0
	1235	882.000														Meter temp, F 84.4
																Static press, iwg .84
																Water collected, g 239.0
																O_2, % 5.85
																Sample time, min 120.

FOSSIL ENERGY RESEARCH CORPORATION
Ontario Hydro Mercury Speciation Sampling Data Sheet

FACILITY NGS UNIT 3 TEST NO. 3-Stack-HG METHOD PAGE 2 OF 2
SAMPLE LOCATION Stack TEST CONDITION AMBIENT TEMPERATURE
OPERATOR/ASSISTANT P-W C.P. METER VOLUME START/END / DATE 10-26-95

PRE-TEST DATA:	EQUIPMENT INFO:
Barometric Pressure, In.Hg	Meter No.
Assumed Stack Pressure, iwg	Meter Yd
Assumed Moisture, %	Δ H @
Assumed Molecular Weight	Pitot ID, Cp
Assumed Stack Temperature	O_2/CO_2 Method
Assumed Meter Temperature	Teflon connecting line? (Y/N)
Average ΔP	Probe material
Stack diameter/area	Probe length
Sample time, min/point	Nozzle material
ΔH = _____ x ΔP	Nozzle diameter, in.
	Filter No.
	Filter material

IMPINGER WEIGHTS:

Imp #	Contents	Wt (end)		Wt (start)		Wt gain
1			-		=	
2			-		=	
3			-		=	
4			-		=	
5			-		=	
6			-		=	
7			-		=	
8			-		=	
					Total	

See page one

COMMENTS:

LEAK CHECKS:

	CFM	Vacuum	Pitot	Initial
Pre-test				
Post-test				

PRE-TEST METER CALIBRATION CHECK:

	Time	Δ H	Meter Reading	Meter In/Out
Start				/
Stop				/
Avg/total				

SAMPLE POINT	TIME (clock)	METER VOLUME ft³	ΔP iwg	ΔH iwg	TEMPERATURES, F STACK	PROBE	Line FILTER		METER In	METER out	IMP OUT		O_2	VAC.	STATIC PRESS. iwg	CHAIN OF CUSTODY INFORMATION
M-3	1243	882.200	.60	1.25	121	262	258	253	91	76	55		5.8	8		Impingers Loaded
	1248	885.8	.60	1.25	121	255	259	258	94	76	55		5.8	8		Impingers Recovered
2	1253	889.3	.60	1.25	121	257	258	258	96	77	55		5.9	8		Filter Loaded
	1258	892.6	.60	1.25	121	255	260	258	96	78	55		5.9	8		Filter Recovered
1	1303	896.4	.45	.95	121	256	262	257	95	78	54		5.9	8		Probe Wash
	1308	899.0	.45	.95	121	256	262	259	95	78	54		5.9	8		
Stop	1313	902.975														
																TEST AVERAGES/TOTALS
W-3	1320	902.150	.59	1.25	121	260	262	258	91	77	54		5.9	8		Calculated by:
	1325	905.7	.59	1.25	121	260	261	252	96	78	55		5.9	8		Checked by:
2	1330	909.2	.66	1.25	121	262	262	251	97	79	55		5.9	8		Δ P, iwg
	1335	912.8	.60	1.25	121	263	263	252	97	79	55		5.9	8		Δ H, iwg
1	1340	915.1	.42	.88	121	262	260	259	97	99	54		5.9	8		Sample vol, acf
	1345	919.0	.42	.88	121	263	260	258	97	79	54		5.9	8		Stack temp, F
	1350	921.900														Meter temp, F
																Static press, iwg
																Water collected, g
																O_2, %
																Sample time, min

p. 1 of 2

FOSSIL ENERGY RESEARCH CORP.

SAMPLING POINT LOCATION DATA
EPA Method 1

Plant Navajo 3 Data by McDannel

Date 10/25/99 Test Location Module B Inlet

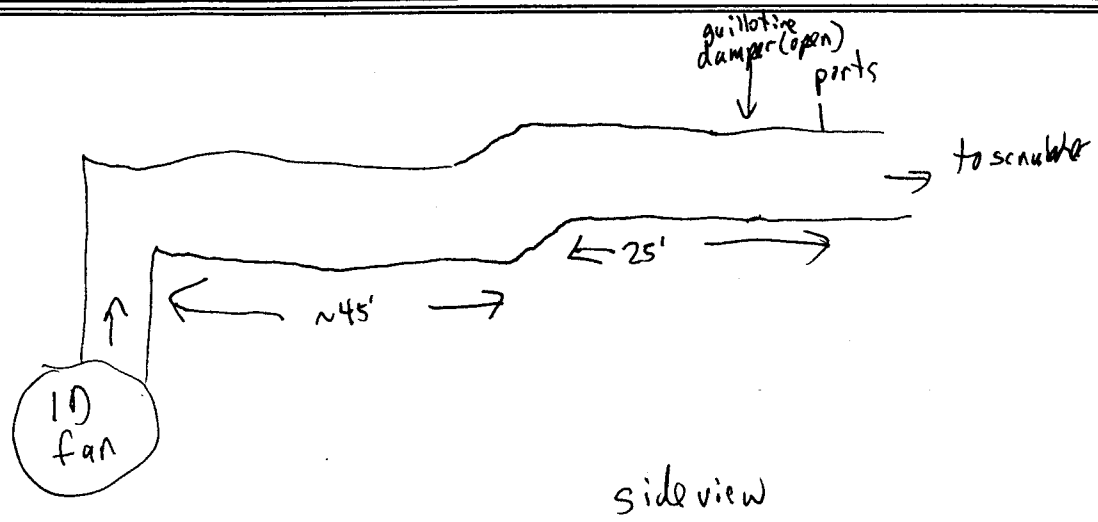

DIAGRAM OF SAMPLING LOCATION

Upstream Dist./Dia._____

Downstream Dist./Dia_____

Coupling Length_____

No. of Sampling Pts._____

Stack Dimension_____

Stack Are, ft²_____

Sample Point	% of Diameter	In. from Near Wall	In. from Nozzle*
	see page 2		

*Inches from wall plus coupling length

FOSSIL ENERGY RESEARCH CORP.

p. 2 of 2

SAMPLING POINT LOCATION DATA
EPA Method 1

Plant Navajo #3 Data by PA/JB

Date 10/25/99 Test Location INLET

DIAGRAM OF SAMPLING LOCATION

Upstream Dist./Dia._____

Downstream Dist./Dia_____

Coupling Length 18"

No. of Sampling Pts. 24

Stack Dimension 22' X 22'

Stack Are, ft^2_____

Sample Point	% of Diameter	In. from Near Wall	In. from Nozzle*
1	8.3	22"	40"
2	25.0	66"	84"
3	41.7	110"	128"
4	58.3	154"	172"

*Inches from wall plus coupling length

Fossil Energy Research Corp.
Preliminary Velocity Traverse and Cyclonic Flow Check Data Sheet

Test No. 1
Client/Unit Navajo #3
Location INLET

Date 10/25/99
Data by PA / JB
Start time 13:12
Stop time 14:11

Barometric pressure
Static pressure, iwg 3.15

Port	Point	ΔP	Temp	Yaw Angle
A	4	.6	331	0
	3	.52	331	0
	2	.48	334	5
	1	.47	328	5
B	4	.53	326	0
	3	.57	326	5
	2	.48	327	0
	1	.38	318	0
C	4	313	.55	0
	3	314	.59	5
	2	314	.52	5
	1	.34	307	5

Port	Point	ΔP	Temp	Yaw Angle
D	4	.5	307	0
	3	.58	305	0
	2	.45	303	0
	1	.42	306	0
E	4	.43	305	5
	3	.51	301	5
	2	.48	296	5
	1	.33	293	0
F	4	.49	302	5
	3	.54	300	5
	2	.57	295	0
	1	.48	293	0

Leak check: Pre-test 0
Post-test

Manometer zero: Pre-test 0
Post-test

Notes/Comments

FOSSIL ENERGY RESEARCH CORP.
METHOD 1 DATA SHEET

Client: SRP

Date: 10/25/1999

Sample Location: Navajo 3 Stack

Prepared By: Mark McDannel

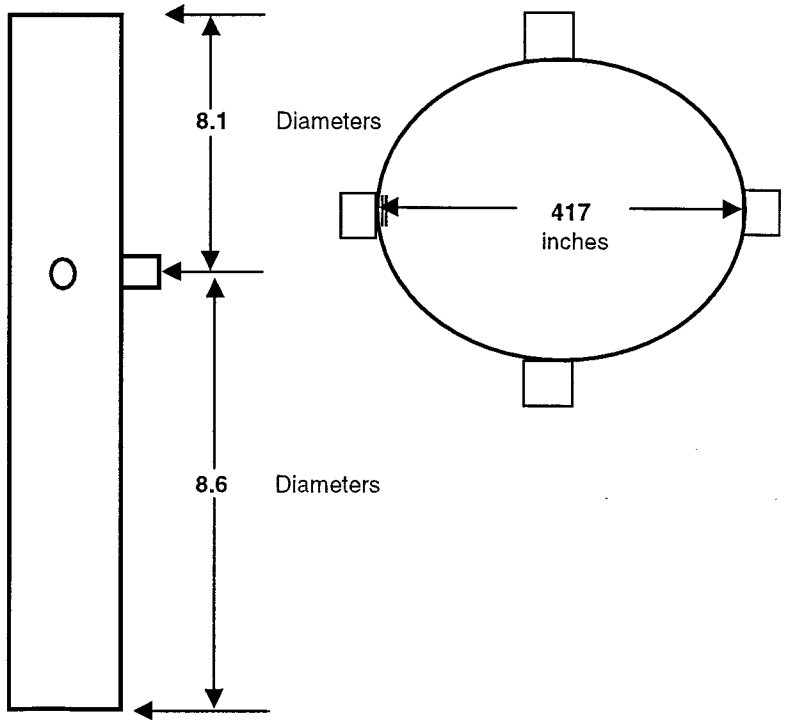

Diameter (in.)	**417.00**
Upstream (Ft.)	**300**
Down Stream (Ft.)	**280**
Coupling (in.)	**18**
Stack Area (ft^2)	**948.42**

Point No.	% Dia.	Distances A	Distances B
1	4.4	18.17	36.17
2	14.6	61.07	79.07
3	29.6	123.38	141.38

Notes on distances:
A = distance from inside stack wall to traverse point.
B = distance from outside of sample port to probe tip.

Fossil Energy Research Corp.
Preliminary Velocity Traverse and Cyclonic Flow Check Data Sheet

Test No. Prelim Vel.
Client/Unit Navajo 3
Location Stack

Date 10-25-99
Data by Dave Cowan
Start time 1025
Stop time 1100

Barometric pressure
Static pressure, iwg + .83

Port	Point	ΔP	Temp	Yaw Angle
N	3	.55	122	+5
	2	.57	122	+8°
	1	.45	121	+2
W	3	.60	122	+3
	2	.56	122	0
	1	.42	121	+5
E	3	.61	122	+5
	2	.55	122	0
	1	.43	121	+6
S	3	.63	122	0-5
	2	.56	122	+5
	1	.44	121	+5

Port	Point	ΔP	Temp	Yaw Angle

Leak check: Pre-test ok
Post-test ok

Manometer zero: Pre-test
Post-test

.5283

678.000

Notes/Comments

Cyclonic flow check.xls

Fossil Energy Research Corp.
Portable O_2 Analyzer Calibration Error Data Sheet

Unit	Navajo 3	**Date**	10/25/99
Pre test number	1	**Data by** (pre test)	MDM
Post test number	1	(post test)	MDM
Mid range cal gas value	8.96	**Zero gas bottle number**	ALM 12499
Mid range bottle number	SA20637		
Analyzer scale	0-25%		

Inlet Analyzer								
	Pre test calibration				*Post test calibration*			
	Reading	Diff	Diff	Pass?	Reading	Diff	Diff	Pass?
		% O_2	% scale			% O_2	% scale	
Zero	0.0	0	0	Y	0.1	.1	.4	Y
Cal gas	9.1	.14	.6	Y	9.0	.04	.2	Y

Stack/Outlet Analyzer								
	Pre test calibration				*Post test calibration*			
	Reading	Diff	Diff	Pass?	Reading	Diff	Diff	Pass?
		% O_2	% scale			% O_2	% scale	
Zero	0.1	.1	.4	Y	0.2	.2	.8	Y
Cal gas	9.0	.04	.2	Y	9.1	.14	.6	Y

Fossil Energy Research Corp.
Portable O_2 Analyzer Calibration Error Data Sheet

Unit Navajo 3
Pre test number 2
Post test number 3

Mid range cal gas value
Mid range bottle number All 10/25

Analyzer scale

Date 10/26/99
Data by (pre test) MDM
(post test) MDM

Zero gas bottle number

Inlet Analyzer								
	Pre test calibration				*Post test calibration*			
	Reading	Diff	Diff	Pass?	Reading	Diff	Diff	Pass?
		% O_2	% scale			% O_2	% scale	
Zero	.2	.2	.8	Y	0.1	.1	.4	Y
Cal gas	9.0	.04	.2	Y	9.1	.14	.6	Y

Stack/Outlet Analyzer								
	Pre test calibration				*Post test calibration*			
	Reading	Diff	Diff	Pass?	Reading	Diff	Diff	Pass?
	.	% O_2	% scale			% O_2	% scale	
Zero	.2	.2	.8	Y	0.2	0.2	0.8	Y
Cal gas	9.2	.24	1.0	Y	9.1	0.14	.6	Y

Praxair
5700 South Alameda Street
Los Angeles, CA 90058
Telephone: (323) 585 2151
Facsimile: (714) 542-6689

CERTIFICATE OF ANALYSIS / EPA PROTOCOL GAS

CUSTOMER DELTA AIR

P.O NUMBER

REFERENCE STANDARD

COMPONENT	NIST SRM NO.	CYLINDER NO.	CONCENTRATION
OXYGEN GMIS	vs 2658a	SA 9818	10.02%
CARBON DIOXIDE NTRM	82745x	SA 18781	17.89%

ANALYZER READINGS

R=REFERENCE STANDARD *Z=ZERO GAS* *C=GAS CANDIDATE*

1. COMPONENT OXYGEN GMIS ANALYZER MAKE-MODEL-S/N Siemens Oxymat 5E S/N A12-839
ANALYTICAL PRINCIPLE Paramagnetic
FIRST ANALYSIS DATE 04/14/99 LAST CALIBRATION DATE 04/05/99
SECOND ANALYSIS DATE

Z 0.00	R 10.02	C 8.96	CONC. 8.96	Z	R	C	CONC.
R 10.02	Z 0.00	C 8.96	CONC. 8.96	R	Z	C	CONC.
Z 0.00	C 8.96	R 10.02	CONC. 8.96	Z	C	R	CONC.

U/M % MEAN TEST ASSAY 8.96 % U/M % MEAN TEST ASSAY

2. COMPONENT CARBON DIOXIDE NTRM ANALYZER MAKE-MODEL-S/N Siemens Ultramat 5E S/N A12-730
ANALYTICAL PRINCIPLE NDIR
FIRST ANALYSIS DATE 04/14/99 LAST CALIBRATION DATE 04/05/99
SECOND ANALYSIS DATE

Z 0.00	R 17.90	C 17.96	CONC. 17.95	Z	R	C	CONC.
R 17.92	Z 0.00	C 18.02	CONC. 17.99	R	Z	C	CONC.
Z 0.00	C 18.00	R 17.94	CONC. 17.95	Z	C	R	CONC.

U/M % MEAN TEST ASSAY 17.96 % U/M % MEAN TEST ASSAY

Values not valid below 150 psig

THIS CYLINDER NO. SA 20637
HAS BEEN CERTIFIED ACCORDING TO SECTION EPA-600/R97/121
OF TRACEABILITY PROTOCOL NO. Rev. 9/97
PROCEDURE G1
CERTIFIED ACCURACY ± 1 % NIST TRACEABLE
CYLINDER PRESSURE 2000 PSIG
CERTIFICATION DATE 04/14/99
EXPIRATION DATE 04/14/02 TERM 36 MONTHS

CERTIFIED CONCENTRATION

OXYGEN	8.96 %
CARBON DIOXIDE	17.96 %
NITROGEN	BALANCE

SA 20637

ANALYZED BY JOSEPH CHARLES

CERTIFIED BY PHU TIEN NGUYEN

IMPORTANT
Information contained herein has been prepared at your request by qualified experts within Praxair Distribution, Inc. While we believe that the information is accurate within the limits of the analytical methods employed and is complete to the extent of the specific analyses performed, we make no warranty or representation as to the suitability of the use of the information for any particular purpose. The information is offered with the understanding that any use of the information is at the sole discretion and risk of the user. In no event shall the liability of Praxair Distribution, Inc. arising out of the use of the information contained herein exceed the fee established for providing such information.

DELTA AIR QUALITY SERVICES, INC.

EPA Method 5
522 Series Meter Box Calibration
Post-Test Orifice Method
English Meter Box Units, English K' Factor

Filename: C:\APEX\[3-wcs-shrt-11-8-99.xls]522ORPO3
Revised: 7/25/95 Version: 2.2

CONVERSION FACTORS

1 mm Hg =	0.13330	kPa
1 cm =	0.39370	inch
1 mm =	0.03937	inch
1 cu ft =	28.32	liters

PROJECT: Epri Hg
Model #: apex
Serial #: 3-wcs

Date: ----------> November 8-9
Barometric Pressure: ----------> 29.92 (in. Hg)
Theoretical Critical Vacuum:---> 14.11 (in. Hg)

!!!!!!!!
IMPORTAN For valid test results, the Actual Vacuum should be 1 to 2 in. Hg greater than the Theoretical Critical Vacuum shown above.
IMPORTAN The Critical Orifice Coefficient, K', must be entered in English units, (ft)^3*(deg R)^0.5/((in.Hg)*(min)).
!!!!!!!!

---------- DRY GAS METER READINGS ---------- -CRITICAL ORIFICE READINGS-

dH (in H2O)	Time (min)	Volume Initial (cu ft)	Volume Final (cu ft)	Volume Total (cu ft)	Initial Temps. Inlet (deg F)	Initial Temps. Outlet (deg F)	Final Temps. Inlet (deg F)	Final Temps. Outlet (deg F)	Orifice Serial# (number)	K' Orifice Coefficient (see above)	Actual Vacuum (in Hg)	Ambient Temperature Initial (deg F)	Ambient Temperature Final (deg F)	Ambient Temperature Average (deg F)
1.15	10.00	932.000	938.161	6.161	80.0	69.0	80.0	70.0	55	0.459	18.0	69.0	69.0	69.0
1.15	10.00	938.300	944.470	6.170	80.0	70.0	83.0	71.0	55	0.459	18.0	69.0	69.0	69.0
1.15	10.00	944.600	950.789	6.189	84.0	71.0	87.0	72.0	55	0.459	18.0	69.0	70.0	69.5

-- Average Temperatures --

DGM Outlet (deg R)	DGM Overall (deg R)	Ambient Temp (deg R)
529.5	534.8	529.0
530.5	536.0	529.0
531.5	538.5	529.5

********** RESULTS **********

--- DRY GAS METER ---

VOLUME ORRECTE Vm(std) (cu ft)	VOLUME RRECTED Vm(std) (liters)
6.098	172.7
6.093	172.5
6.083	172.3

--------- ORIFICE ---------

VOLUME CORRECTE Vcr(std) (cu ft)	VOLUME ORRECTE Vcr(std) (liters)	VOLUME NOMINAL Vcr (cu ft)
5.971	169.1	5.985
5.971	169.1	5.985
5.968	169.0	5.988

Average Y -------> 0.980

-- DRY GAS METER --

CALIBRATION FACTOR Y

Value (number)	Variation (number)
0.979	-0.001
0.980	0.000
0.981	0.001

--------- ORIFICE ---------

CALIBRATION FACTOR dH@

Value (in H2O)	Value (mm H2O)	Variation (in H2O)
1.809	45.95	0.003
1.806	45.87	-0.001
1.804	45.82	-0.002
1.806	45.88	<------- Average dH@

CFM @ dH=1 0.558

Note: For Calibration Factor Y, the ratio of the reading of the calibration meter to the dry gas meter, acceptable tolerance of individual values from the average is +-0.02.

EPA Method 5
Meter Box Calibration
Pre/Post-Test Orifice Method

System I.D.: 3-WCS
Meter Serial #: ADEX

Date: 3/23/99 (in Hg)
Barometric Pressure: 24.80 (in Hg)

DRY GAS METER READINGS											CRITICAL ORIFICE READINGS				
							Initial Temps.		Final Temps.					Ambient Temperature	
dH (in H2O)	Start Time hh:mm:ss	Stop Time hh:mm:ss	Elapsed Time mm.mm	Volume Initial (cu ft)	Volume Final (cu ft)	Volume Total (cu ft)	Inlet (deg F)	Outlet (deg F)	Inlet (deg F)	Outlet (deg F)	Orifice Serial# (number)	K' Orifice Coefficient	Actual Vacuum (in Hg)	Initial (deg F)	Final (deg F)
0.25	16			936.8	941.833	5.033	74	72	73	72	40	.239	21	60	60
0.54	25			925.1	936.44	11.34	72	70	74	72	48	.347	21	60	60
0.96	9			942.3	947.752	5.452	73	72	75	72	55	.459	17	60	60
1.6	10			948.2	955.986	7.786	76	72	78	72	63	.569	18	61	61
2.9	10			957.1	967.815	10.715	78	73	85	74	73	.820	15	61	61

RESULTS

DRY GAS METER		ORIFICE			DRY GAS METER			ORIFICE		
					CALIBRATION FACTOR			CALIBRATION FACTOR		
VOLUME CORRECTED Vm(std) (cu ft)		VOLUME CORRECTED Vcr(std) (cu ft)		VOLUME NOMINAL Vcr (cu ft)	Y Value (number)	Variation (number)		dH@ Value (in H2O)		Variation (in H2O)
4.136		4.159		4.943	1.000	0		1.712		-.037
9.340		9.435		11.214	1.010	.004		1.758		.009
4.488		4.493		5.340	1.001	-.005		1.783		.033
6.403		6.400		7.621	0.999	-.006		1.808		.059
8.796		8.909		10.610	1.013	.007		1.686		-.063

Average Y → 1.006

1.749 ← Average dH@

SIGNED: Stafford Pearce for Bob Davis

Date: ~~[illegible]~~ 3/23/99

DGM Orifice Calibration Log Sheet

EPA Method 5

Meter Box Calibration

Pre/Post-Test Orifice Method

System I.D.: 3-WCS

Meter Serial #:

Date: 7-16-99 (in. Hg)

Barometric Pressure: 29.90 (in. Hg)

DRY GAS METER READINGS											CRITICAL ORIFICE READINGS				
dH (in H2O)	Start Time hhmmss	Stop Time hhmmss	Elapsed Time mm.mm	Volume Initial (cu ft)	Volume Final (cu ft)	Volume Total (cu ft)	Initial Temps. Inlet (deg F)	Initial Temps. Outlet (deg F)	Final Temps. Inlet (deg F)	Final Temps. Outlet (deg F)	Orifice Serial# (number)	'K' Orifice Coefficient	Actual Vacuum (in Hg)	Ambient Temperature Initial (deg F)	Ambient Temperature Final (deg F)
2.00	STOP WATCH		8 00	103.602	109.840	6.238	78.0	73.0	81	74	63	0.589	19.	73	74
2.00			8 00	109.840	116.071	6.231	78.0	74.0	82	74	63	0.589	19	73	73
2.00	↓	↓	8 00	116.071	122.315	6.244	79.0	75.0	83	75	63	0.589	19	72	72.5

RESULTS

DRY GAS METER VOLUME CORRECTED Vm(std) (cu ft)		ORIFICE VOLUME CORRECTED Vcr(std) (cu ft)		ORIFICE VOLUME NOMINAL Vcr (cu ft)		DRY GAS METER CALIBRATION FACTOR Y Value (number)	DRY GAS METER CALIBRATION FACTOR Y Variation (number)		ORIFICE CALIBRATION FACTOR dH@ Value (in H2O)		ORIFICE CALIBRATION FACTOR Variation (in H2O)	
6.163		6.097		6.173		0.989	-0.002		1.916		0.005	
6.150		6.103		6.167		0.992	0.001		1.910		0.000	
6.152		6.105		6.164		0.993	0.001		1.905		-0.005	

Average Y ⟶ 0.991

1.912 ⟵ Average dH@

SIGNED: [signature]

Date: 7-16-99

DGM Orifice Calibration Log Sheet

EPA Method 5
Meter Box Calibration
Pre/Post-Test Orifice Method

System I.D.: 3-WCS
Meter Serial#: Apex

Date: 8/4/99 (in. Hg)
Barometric Pressure: 29.74 (in. Hg)

DRY GAS METER READINGS											CRITICAL ORIFICE READINGS				
dH (in H2O)	Start Time hhmm:ss	Stop Time hhmm:ss	Elapsed Time mm.mm	Volume Initial (cu ft)	Volume Final (cu ft)	Volume Total (cu ft)	Initial Temps. Inlet (deg F)	Initial Temps. Outlet (deg F)	Final Temps. Inlet (deg F)	Final Temps. Outlet (deg F)	Orifice Serial# (number)	K' Orifice Coefficient	Actual Vacuum (in Hg)	Ambient Temperature Initial (deg F)	Ambient Temperature Final (deg F)
1.2	0	10	10	48.773	54.810	6.037	80	77	82	78	55	.459	21	81	81
1.2		20	10	54.810	61.040	6.230	82	78	84	79				81	82
1.2		30	10	61.040	67.183	6.143	84	79	86	81				82	82

RESULTS

DRY GAS METER VOLUME CORRECTED Vm(std) (cu ft)	ORIFICE VOLUME CORRECTED Vcr(std) (cu ft)	ORIFICE VOLUME NOMINAL Vcr (cu ft)	DRY GAS METER CALIBRATION FACTOR Y Value (number)	DRY GAS METER CALIBRATION FACTOR Variation (number)	ORIFICE CALIBRATION FACTOR dH@ Value (in H2O)	ORIFICE CALIBRATION FACTOR Variation (in H2O)
5.891	5.869	6.052	0.996	.014	1.913	0.002
6.062	5.866	6.055	0.968	-.015	1.912	.001
5.958	5.863	6.058	0.984	.001	1.908	-.003
					1.911	
		Average Y →	0.983		0.543	← Average dH@

SIGNED: [signature]

Date: 8/4/99

DGM Orifice Calibration Log Sheet

EPA Method 5

Meter Box Calibration

Pre/Post-Test Orifice Method

System I.D.: 3-WCS

Meter Serial #: APEX

Date: 10-11-99 (in. Hg)

Barometric Pressure: 29.92 (in. Hg)

DRY GAS METER READINGS											CRITICAL ORIFICE READINGS				
							Initial Temps.		Final Temps.					Ambient Temperature	
dH (in H2O)	Start Time hh:mm:ss	Stop Time hh:mm:ss	Elapsed Time mm.mm	Volume Initial (cu ft)	Volume Final (cu ft)	Volume Total (cu ft)	Inlet (deg F)	Outlet (deg F)	Inlet (deg F)	Outlet (deg F)	Orifice Serial# (number)	K' Orifice Coefficient	Actual Vacuum (in Hg)	Initial (deg F)	Final (deg F)
0.32	0947	1003	16:00	971.53	976.739	5.209	77	73	76	74	40	0.239	21	60	60
0.62	1006	1017	11:00	977.0	982.133	5.133	72	72	73	72	48	0.347	21	60	60
1.20	1019	1028	9:00	982.290	987.87	5.580	72	72	73	72	55	0.459	17	60	60
1.90	1030	1037	7:00	988.3	993.846	5.546	73	72	76	73	63	0.589	18	61	61
3.00	1039	1044	5:00	994.8	1000.265	5.465	76	73	73	73	73	0.820	15	61	61

RESULTS

DRY GAS METER					ORIFICE				DRY GAS METER			ORIFICE			
									CALIBRATION FACTOR			CALIBRATION FACTOR			
VOLUME CORRECTED Vm(std) (cu ft)					VOLUME CORRECTED Vcr(std) (cu ft)		VOLUME NOMINAL Vcr (cu ft)		Y Value (number)	Variation (number)		dH@ Value (in H2O)		Variation (in H2O)	
5.143					5.017		4.943		0.976	-0.005		1.812		0.101	
5.098					5.008		4.934		0.982	0.002		1.670		-0.041	
5.550					5.420		5.340		0.977	-0.004		1.847		0.136	
5.512					5.405		5.335		0.980	0.000		1.778		0.067	
5.444					5.374		5.305		0.987	0.007		1.447		-0.264	

Average Y ⟶ 0.980

1.711 ⟵ Average dH@

SIGNED: Tina Rodregon

Date: 10-11-99

DGM Orifice Calibration Log Sheet

TEMPERATURE SYSTEM CALIBRATION

T_1 Reference Thermometer I.D.: F95-195
T_1 Reference Thermometer I.D.: F95-195
T_1 Reference Thermometer I.D.: F95-195

T/C I.D. #2	Readout I.D.	T/C - Readout °F				Reference Thermometer °F				Difference	
		Reading 1	Reading 2	Reading 3	Average	Reading 1	Reading 2	Reading 3	Average	°F	%, (°R)
T_1	3-WCS	32	32	32	32	32	32	32	32	0	0.0%
T_2	3-WCS	213	213	212	213	212	212	212	212	1	0.1%
T_3	3-WCS	385	387	386	386	390	390	390	390	-4	-0.5%
T_1	6-WCS	33	32	33	33	32	32	32	32	1	0.1%
T_2	6-WCS	214	214	213	214	212	212	212	212	2	0.2%
T_3	6-WCS	387	387	387	387	390	390	390	390	-3	-0.4%
T_1	CC-1	33	33	33	33	32	32	32	32	1	0.2%
T_2	CC-1	216	215	215	215	212	212	212	212	3	0.5%
T_3	CC-1	387	388	387	387	390	390	390	390	-3	-0.3%
T_1	2-WCS	33	33	33	33	32	32	32	32	1	0.2%
T_2	2-WCS	214	214	214	214	212	212	212	212	2	0.3%
T_3	2-WCS	385	384	386	385	390	390	390	390	-5	-0.6%
T_1	5-WCS	33	33	33	33	32	32	32	32	1	0.2%
T_2	5-WCS	213	213	213	213	212	212	212	212	1	0.1%
T_3	5-WCS	382	383	383	383	390	390	390	390	-7	-0.9%
T_1	8-WCS	35	34	34	34	32	32	32	32	2	0.5%
T_2	8-WCS	217	216	216	216	212	212	212	212	4	0.6%
T_3	8-WCS	388	388	387	388	390	390	390	390	-2	-0.3%
T_1	PTC-6	33	32	32	32	32	32	32	32	0	0.1%
T_2	PTC-6	212	212	212	212	212	212	212	212	0	0.0%
T_3	PTC-6	380	381	381	381	390	390	390	390	-9	-1.1%
T_1	PTC-2	35	35	35	35	32	32	32	32	3	0.6%
T_2	PTC-2	213	213	213	213	212	212	212	212	1	0.1%
T_3	PTC-2	384	384	384	384	390	390	390	390	-6	-0.7%
T_1	PTC-1	33	33	33	33	32	32	32	32	1	0.2%
T_2	PTC-1	214	213	214	214	212	212	212	212	2	0.2%
T_3	PTC-1	386	387	387	387	390	390	390	390	-3	-0.4%
T_1	7-WCS	33	33	33	33	32	32	32	32	1	0.2%
T_2	7-WCS	212	212	212	212	212	212	212	212	0	0.0%
T_3	7-WCS	388	388	389	388	390	390	390	390	-2	-0.2%

Notes: Performed on 4-27-99 by D. Wonderly, M. McCune, and L. Pedregon

APEX INSTRUMENTS
EPA Method 5
522 Series Meter Box Calibration
Pre-Test Orifice Method
English Meter Box Units, English K' Factor

Filename: C:\meter cal\Apex\[FERCO BOX 7 -99.xls]scenorth
Revised: 7/25/95 Version: 2.2

Model #: FERCO BOX
Serial #: 1-FERCO

Date: ----------> 07/19/99
Barometric Pressure: ---------> 29.95 (in. Hg)
Theoretical Critical Vacuum:---> 14.13 (in. Hg)

!!!!!!!!
IMPORTAN For valid test results, the Actual Vacuum should be 1 to 2 in. Hg greater than the Theoretical Critical Vacuum shown above.
IMPORTAN The Critical Orifice Coefficient, K', must be entered in English units, (ft)^3*(deg R)^0.5/((in.Hg)*(min)).
!!!!!!!!

---------- DRY GAS METER READINGS ----------									-CRITICAL ORIFICE READINGS-					
dH (in H2O)	Time (min)	Volume Initial (cu ft)	Volume Final (cu ft)	Volume Total (cu ft)	Initial Temps. Inlet (deg F)	Initial Temps. Outlet (deg F)	Final Temps. Inlet (deg F)	Final Temps. Outlet (deg F)	Orifice Serial# (number)	K' Orifice Coefficient (see above)	Actual Vacuum (in Hg)	-- Ambient Temperature -- Initial (deg F)	Final (deg F)	Average (deg F)
0.32	17.00	660.110	665.510	5.400	89.0	86.0	89.0	86.0	40	0.239	19.0	88.0	89.0	88.5
0.71	11.00	665.510	670.552	5.042	88.0	87.0	90.0	87.0	48	0.347	19.0	90.0	90.0	90.0
1.30	11.00	653.403	660.110	6.707	86.0	87.0	89.0	86.0	55	0.459	17.0	85.0	87.0	86.0
2.15	8.00	670.552	676.750	6.198	90.0	87.0	94.0	88.0	63	0.589	15.0	91.0	90.0	90.5
4.20	6.00	647.000	653.403	6.403	86.0	85.0	85.0	87.0	73	0.820	17.0	84.0	84.0	84.0

********** RESULTS **********

--- DRY GAS METER ---		-------- ORIFICE --------			-- DRY GAS METER --		-------- ORIFICE --------		
VOLUME ORRECTE Vm(std) (cu ft)	VOLUME RRECTED Vm(std) (liters)	VOLUME CORRECTE Vcr(std) (cu ft)	VOLUME ORRECTE Vcr(std) (liters)	VOLUME NOMINAL Vcr (cu ft)	CALIBRATION FACTOR Y Value (number)	CALIBRATION FACTOR Y Variation (number)	CALIBRATION FACTOR dH@ Value (in H2O)	Value (mm H2O)	Variation (in H2O)
5.215	147.7	5.196	147.1	5.394	0.996	-0.005	1.865	47.38	-0.135
4.869	137.9	4.875	138.0	5.075	1.001	0.000	1.965	49.91	-0.035
6.499	184.0	6.472	183.3	6.688	0.996	-0.005	2.043	51.90	0.043
5.988	169.6	6.015	170.3	6.267	1.005	0.003	2.065	52.46	0.065
6.262	177.4	6.318	178.9	6.505	1.009	0.008	2.063	52.39	0.062
			Average Y ------->		1.001		2.000	50.81	<------ Average dH@
							d	0.530	

Note: For Calibration Factor Y, the ratio of the reading of the calibration meter to the dry gas meter, acceptable tolerance of individual values from the average is +-0.02.

For Orifice Calibration Factor dH@, the orifice differential pressure in inches of H20 that equates to 0.75 cfm of air at 68 F and 29.92 inches of Hg, acceptable tolerance of individual values from the average is +-0.2.

SIGNED: [signature] Date: 7-19-99

Post test Meter Cal
For Fesco meter

APEX INSTRUMENTS
EPA Method 5
522 Series Meter Box Calibration
Pre-Test Orifice Method
English Meter Box Units, English K' Factor

Filename: C:\My Documents\[posthgferco.xls]sceneorth
Revised: 7/25/95 Version: 2.2

Model #:
Serial #:

Date: ——————> 10-29-99
Barometric Pressure: ———> 29.90 (in. Hg)
Theoretical Critical Vacuum:—> 14.10 (in. Hg)

!!!!!!
IMPORTAN For valid test results, the Actual Vacuum should be 1 to 2 in. Hg greater than the Theoretical Critical Vacuum shown above.
IMPORTAN The Critical Orifice Coefficient, K', must be entered in English units, (ft)^3*(deg R)^0.5/((in.Hg)*(min)).
!!!!!!

——— DRY GAS METER READINGS ——— -CRITICAL ORIFICE READINGS-

dH (in H2O)	Time (min)	Volume Initial (cu ft)	Volume Final (cu ft)	Volume Total (cu ft)	Initial Temps. Inlet (deg F)	Initial Temps. Outlet (deg F)	Final Temps. Inlet (deg F)	Final Temps. Outlet (deg F)	Orifice Serial# (number)	K' Orifice Coefficient (see above)	Actual Vacuum (in Hg)	Ambient Temperature Initial (deg F)	Ambient Temperature Final (deg F)	Ambient Temperature Average (deg F)
1.28	11.00	747.000	753.463	6.463	78.0	71.0	80.0	72.0	53	0.459	17.0	78.0	78.0	78.0
1.28	11.00	754.000	760.491	6.491	79.0	73.0	81.0	75.0	48	0.459	17.0	78.0	78.0	78.0
1.28	11.00	761.000	767.505	6.505	81.0	75.0	81.0	76.0	48	0.459	17.0	78.0	78.0	78.0

********** RESULTS **********

— DRY GAS METER — VOLUME CORRECTE Vm(std) (cu ft)	VOLUME RRECTED Vm(std) (liters)	——— ORIFICE ——— VOLUME CORRECTE Vcr(std) (cu ft)	VOLUME ORRECTE Vcr(std) (liters)	VOLUME NOMINAL Vcr (cu ft)	– DRY GAS METER – CALIBRATION FACTOR Y Value (number)	Variation (number)	——— ORIFICE ——— CALIBRATION FACTOR dH@ Value (in H2O)	Value (mm H2O)	Variation (in H2O)
6.389	180.9	6.509	184.3	6.639	1.019	0.001	2.042	51.86	0.008
6.385	181.1	6.509	184.3	6.639	1.018	0.000	2.032	51.62	-0.001
6.394	181.1	6.509	184.3	6.639	1.018	0.000	2.026	51.47	-0.007
			Average Y ——>		1.018		2.033	51.65	<—— Average dH@
							CFM @ dH=	0.526	

Note: For Calibration Factor Y, the ratio of the reading of the calibration meter to the dry gas meter, acceptable tolerance of individual values from the average is +-0.02.

For Orifice Calibration Factor dH@, the orifice differential pressure in inches of H20 that equates to 0.75 cfm of air at 68 F and 29.92 inches of Hg, acceptable tolerance of individual values from the average is +-0.2.

SIGNED: _____ Date: 10-29-99

FOSSIL ENERGY RESEARCH CORP

PITOT TUBE DIMENSIONAL CALIBRATION

Pitot tube ID	Coronado, San Juan, Navajo ~~Stack~~ Inlet	Tube diameter (D_t)	.375
Date	10/25/99	P_A	.5
Data by	PA/JTB	P_B	.5

(a) Face opening plane angle = 90 deg (Y/N)?	A	Y
	B	Y
(b) Face opening planes parallell to longitudinal axis (Y/N)?	A	Y
	B	Y
(c) Both legs equal length and centerline coincident?	A	Y
	B	Y
(d) $P_A = P_B$ (Y/N)?		Y
(e) $1.05\ D_t \leq P \leq 1.50\ D_t$ (Y/N)?		Y

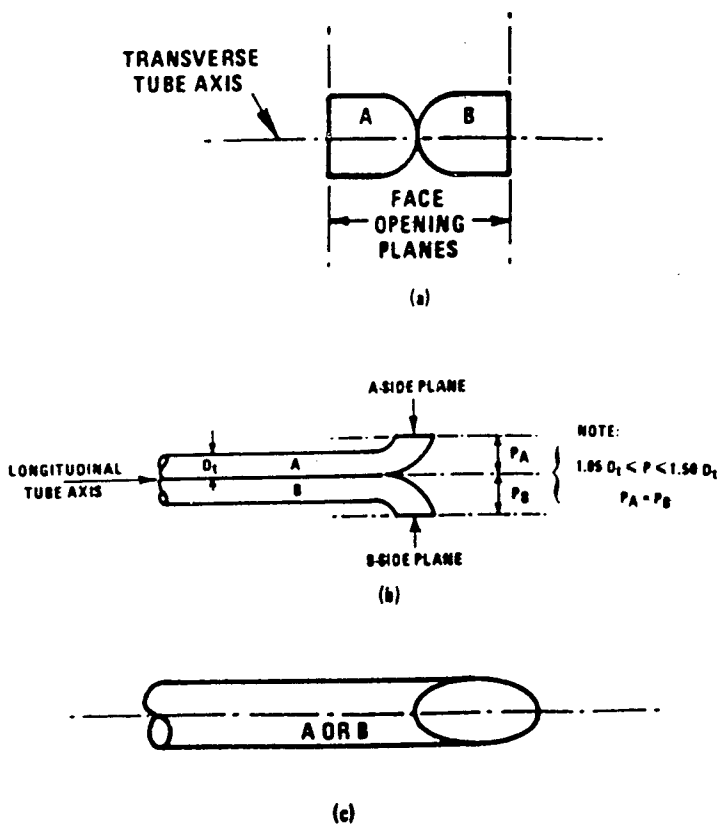

Figure 2-2. Properly constructed Type S pitot tube, shown in: (a) end view; face opening planes perpendicular to transverse axis; (b) top view; face opening planes parallel to longitudinal axis; (c) side view; both legs of equal length and centerlines coincident, when viewed from both sides. Baseline coefficient values of 0.84 may be assigned to pitot tubes constructed this way.

Navajo Stack

FOSSIL ENERGY RESEARCH CORP
PITOT TUBE DIMENSIONAL CALIBRATION

Pitot tube ID	#6 - Stainless	Tube diameter (D_t)	.375
Date	10-25-99	P_A	.465
Data by	D.C.	P_B	.467

(a) Face opening plane angle = 90 deg (Y/N)?	A	Y
	B	Y
(b) Face opening planes parallell to longitudinal axis (Y/N)?	A	Y
	B	Y
(c) Both legs equal length and centerline coincident?	A	Y
	B	Y
(d) $P_A = P_B$ (Y/N)?		
(e) $1.05\ D_t \leq P \leq 1.50\ D_t$ (Y/N)?		Y

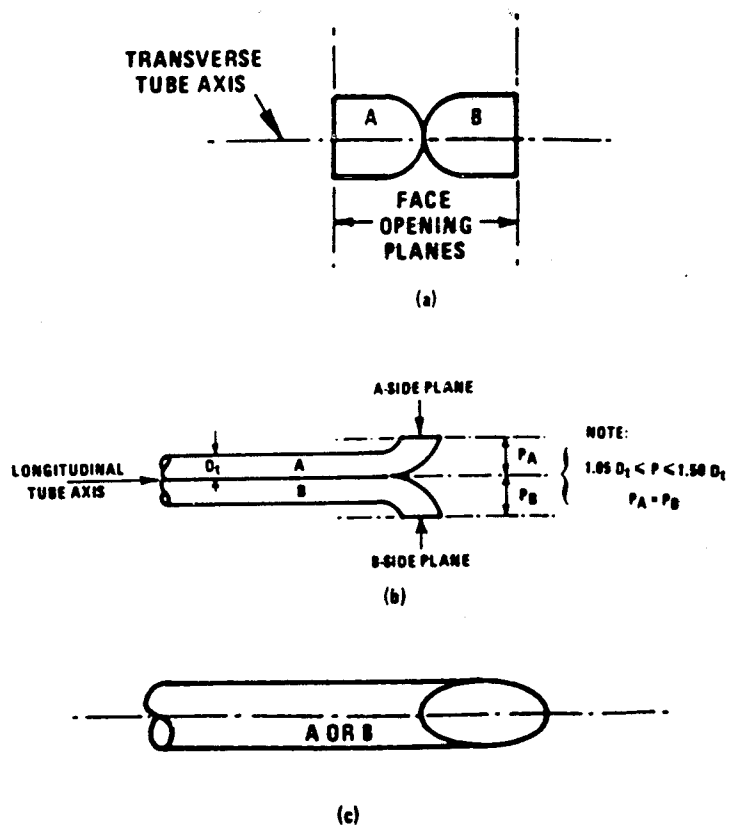

Figure 2-2. Properly constructed Type S pitot tube, shown in: (a) end view; face opening planes perpendicular to transverse axis; (b) top view; face opening planes parallel to longitudinal axis; (c) side view; both legs of equal length and centerlines coincident, when viewed from both sides. Baseline coefficient values of 0.84 may be assigned to pitot tubes constructed this way.

Appendix C. Chain-of-Custody Records

Chain-of-Custody Records

CHAIN OF CUSTODY

CLIENT: Coronado Unit 1, San Juan, Navajo

TEST DATE(S): 10/19/99

LOCATION: —

SAMPLER(S): JB

SAMPLE LOCATION: —

PROJECT MANAGER: Mark McDonald

TEST METHOD(S): Ontario Hydro Mercury

DATE DUE: 45 days

OUTSIDE LAB REQUIRED?: Yes - Philip Analytical

COMPLIANCE TEST? Yes - EPA

DATE	TIME	TEST #	SAMPLE DESCRIPTION	CONTAINERS	SAMPLER	COMMENTS
10/19/99	1200	Reagent Blank	3 quartz thimbles	3	JB	
			0.1 N HNO_3	1		50 ml
			1 N KCl	1		50 ml
			5% HNO_3 / 10% H_2O_2	1		50 ml
			H_2SO_4 / $KMnO_4$ Soln	1		50 ml
			10% HAS / 10% NaCl	1		100 ml

RELEASED BY	DATE/TIME	RECEIVED BY	DATE/TIME
[signature]	10/19/99 1200		

ANALYSIS REQUIRED:

Delta

CHAIN OF CUSTODY FORM

CLIENT: Navajo Generating Station

TEST DATE(S): 10/25/99, 10/26/99

LOCATION: Unit 3

SAMPLER(S): DW / PA

SAMPLE LOCATION: Scrubber Inlet and Stack

PROJECT MANAGER: Mark McDonnell

TEST METHOD(S): Ontario Hydro Mercury

DATE DUE: 45 days

OUTSIDE LAB REQUIRED: Yes - Philip Analytical

COMPLIANCE TEST: Yes - EPA

DATE	TIME	TEST #	SAMPLE DESCRIPTION	CONTAINERS	SAMPLER	COMMENTS
10/25/99	1500	Stack Field Blank	Probe Wash & F 1/2	1	DW	
			KCl imp	1		
			HNO_3/H_2O_2	1		
			$KMnO_4$ imp	1		
			Filter # 83UP-116	1		
10/26/99	1500	Inlet Field Blank	Thimble QT-63	1	PA	
			Front 1/2	1		
			KCl imp	1		
			HNO_3/H_2O_2 imp	1		
			$KMnO_4$ imp	1		

RELEASED BY	DATE/TIME	RECEIVED BY	DATE/TIME
[signature]	10/26/99 1545		

ANALYSIS REQUIRED:

CHAIN OF CUSTODY FORM

CLIENT: Navajo Generating Station

LOCATION: Unit 3

SAMPLE LOCATION: Scrubber Inlet and Stack

TEST METHOD(S): Ontario Hydro Mercury

OUTSIDE LAB REQUIRED: Philip Analytical

TEST DATE(S): 10/25/99

SAMPLER(S): DW/PA

PROJECT MANAGER: Mark McDannel

DATE DUE: 45 days

COMPLIANCE TEST: Yes - EPA

Sample DATE	TIME	TEST #	SAMPLE DESCRIPTION	CONTAINERS	SAMPLER	COMMENTS
10/25/99	1830	1-Inlet	Thimble OT-60	1	PA	
			Fraud 1/2	1	↓	
			KCl imp	2	↓	
			HNO_3/H_2O_2 imp	1	↓	
			$KMnO_4$ imp	1	↓	
10/25/99	1830	1-Stack	Filter 83VP-117	1	DW	
			Probe Wash & F 1/2	1	↓	
			KCl imp	2	↓	
			HNO_3/H_2O_2 imp	1	↓	
			$KMnO_4$ imp	1	↓	

RELEASED BY	DATE/TIME	RECEIVED BY	DATE/TIME
[signature]	10/26/99 1000		

ANALYSIS REQUIRED: Mercury by OT Method

CHAIN OF CUSTODY FORM

CLIENT: Navajo Unit 3

LOCATION: Scrubber Inlet and Stack

SAMPLE LOCATION: "

TEST METHOD(S): Ontario Hydro Mercury

OUTSIDE LAB REQUIRED: Yes - Philip Analytical

TEST DATE(S): 10/26/99

SAMPLER(S): DW/PA

PROJECT MANAGER: Mark McDannel

DATE DUE: 45 days

COMPLIANCE TEST: Yes - EPA

Sample DATE	TIME	TEST #	SAMPLE DESCRIPTION	CONTAINERS	SAMPLER	COMMENTS
10/26/99	1200	2-Inlet-Hg	Thimble QT-61	1	PA	
			Front 1/2	1		
			KCl imp	2		
			HNO_3/H_2O_2 imp	1		
			$KMnO_4$ imp	1		
10/26/99	1200	2-Stack-Hg	Filter 83UP-118	1	DW	
			Probe Wash + F 1/2	1		
			KCl imp	2		
			HNO_3/H_2O_2 imp	1		
			$KMnO_4$ imp	1		

RELEASED BY	DATE/TIME	RECEIVED BY	DATE/TIME
[signature]	10/26/99 1200		

ANALYSIS REQUIRED: Speciated Hg by OH method

CHAIN OF CUSTODY FORM

CLIENT: Navajo Generating Station

TEST DATE(S): 10/26/99

LOCATION: Unit 3

SAMPLER(S): DW/PA

SAMPLE LOCATION: Scrubber Inlet and Stack

PROJECT MANAGER: Mark McDonnel

TEST METHOD(S): Ontario Hydro Mercury

DATE DUE: 45 days

OUTSIDE LAB REQUIRED: Yes - Philip Analytical

COMPLIANCE TEST: Yes - EPA

Sample DATE	TIME	TEST #	SAMPLE DESCRIPTION	CONTAINERS	SAMPLER	COMMENTS
10/26/99	1500	3-Stack-Hg	Filter 83UP-119	1	DW	
			KCl imp	2	↓	
			Probe Wash & F½	1		
			HNO_3/H_2O_2 imp	1		
			$KMnO_4$ imp	1		
10/26/99	1500	3-Inlet-Hg	Thimble QT-62	1	PA	
			Front ½	1	↓	
			KCl imp	2		
			HNO_3/H_2O_2 imp	1		
			$KMnO_4$ imp	1		

RELEASED BY	DATE/TIME	RECEIVED BY	DATE/TIME
[signature]	10/26/99 1545		

ANALYSIS REQUIRED: Speciated mercury by OH method

List of FERCo Samples Shipped to Philip, October 27, 1999							
Ontario Hydro Samples							
Plant	Description	Test Date	Due Date	Comments			
Craig 1, Craig 3	Reagent Blanks	27-Sep	11-Nov				
Craig 1	Inlet Field Blank	27-Sep	11-Nov				
Craig 1	Stack Field Blank	27-Sep	11-Nov				
Craig 1	1-Inlet	28-Sep	12-Nov				
Craig 1	1-Stack	28-Sep	12-Nov				
Craig 1	2-Inlet	28-Sep	12-Nov				
Craig 1	2-Stack	28-Sep	12-Nov				
Craig 1	3-Inlet	29-Sep	13-Nov				
Craig 1	3-Stack	29-Sep	13-Nov				
Craig 3	Inlet Field Blank	2-Oct	16-Nov				
Craig 3	Stack Field Blank	2-Oct	16-Nov				
Craig 3	1-Inlet	4-Oct	18-Nov				
Craig 3	1-Stack	4-Oct	18-Nov				
Craig 3	2-Inlet	4-Oct	18-Nov				
Craig 3	2-Stack	4-Oct	18-Nov				
Craig 3	3-Inlet	4-Oct	18-Nov				
Craig 3	3-Stack	4-Oct	18-Nov				
Coronado 1, San Juan 2, Navajo 3	Reagent Blanks	19-Oct	3-Dec				
Coronado 1	Inlet Field Blank	19-Oct	3-Dec				
Coronado 1	Outlet Field Blank	19-Oct	3-Dec				
Coronado 1	1-Inlet	18-Oct	2-Dec				
Coronado 1	1-Outlet	18-Oct	2-Dec				
Coronado 1	2-Inlet	19-Oct	3-Dec				
Coronado 1	2-Outlet	19-Oct	3-Dec				
Coronado 1	3-Inlet	19-Oct	3-Dec				
Coronado 1	3-Outlet	19-Oct	3-Dec				
San Juan 2	Inlet Field Blank	22-Oct	6-Dec				
San Juan 2	Outlet Field Blank	22-Oct	6-Dec				
San Juan 2	2-Inlet	21-Oct	5-Dec				
San Juan 2	2-Outlet	21-Oct	5-Dec				
San Juan 2	3-Inlet	22-Oct	6-Dec	Has two filters. Analyze filters separately.			
San Juan 2	3-Outlet	22-Oct	6-Dec	↓			
San Juan 2	4-Inlet	22-Oct	6-Dec				
San Juan 2	4-Outlet	22-Oct	6-Dec				
Navajo 3	Inlet Field Blank	26-Oct	10-Dec				
Navajo 3	Outlet Field Blank	26-Oct	10-Dec				
Navajo 3	1-Inlet	25-Oct	9-Dec				
Navajo 3	1-Outlet	25-Oct	9-Dec				
Navajo 3	2-Inlet	26-Oct	10-Dec				
Navajo 3	2-Outlet	26-Oct	10-Dec				
Navajo 3	3-Inlet	26-Oct	10-Dec				
Navajo 3	3-Outlet	26-Oct	10-Dec				
Total number of samples		42					

List of FERCo Samples Shipped to Philip, October 27, 1999			
Coal Samples, analyze for Hg, Cl			
Plant	Description	Test Date	Target Date
Craig 1	Run 1	28-Sep	12-Nov
Craig 1	Run 2	28-Sep	12-Nov
Craig 1	Run 3	29-Sep	13-Nov
Craig 3	Run 1	4-Oct	18-Nov
Craig 3	Run 2	4-Oct	18-Nov
Craig 3	Run 3	4-Oct	18-Nov
Coronado 1	Run 1	18-Oct	2-Dec
Coronado 1	Run 2	19-Oct	3-Dec
Coronado 1	Run 3	19-Oct	3-Dec
San Juan 2	Run 2	21-Oct	5-Dec
San Juan 2	Run 3	22-Oct	6-Dec
San Juan 2	Run 4	22-Oct	6-Dec
Navajo 3	Run 1	25-Oct	9-Dec
Navajo 3	Run 2	26-Oct	10-Dec
Navajo 3	Run 3	26-Oct	10-Dec
Total number of samples		15	

NOTICE OF SAMPLE RECEIPT-PHILIP ANALYTICAL SERVICES

Attention: Mark McDaniel
Client: Fossil Energy Research Corp.
Re Client Project: Craig
FAX #: 949-859-7916
Phone #: 949-859-4466

Samples for: 'OH' Hg Trains
were received in good condition unless
indicated below.

SAMPLE LISTING

Philip ID #	Sample ID	Date Sampled	Date Received
065693	Reagent Blank	99/09/27	99/10/29
065701	Unit 1 Stack-FB	99/09/27	99/10/29
065702	Unit 1 Stack-R1	99/09/28	99/10/29
065703	Unit 1 Stack-R2	99/09/28	99/10/29
065704	Unit 1 Stack-R3	99/09/29	99/10/29
065705	Unit 1 Inlet-FB	99/09/27	99/10/29
065706	Unit 1 Inlet-R1	99/09/28	99/10/29
065707	Unit 1 Inlet-R2	99/09/28	99/10/29
065708	Unit 1 Inlet-R3	99/09/29	99/10/29
065709	Unit 3 Stack-FB	99/10/02	99/10/29
065710	Unit 3 Stack-R1	99/10/04	99/10/29
065711	Unit 3 Stack-R2	99/10/04	99/10/29
065712	Unit 3 Stack-R3	99/10/05	99/10/29
065713	Unit 3 Inlet-FB	99/10/02	99/10/29
065714	Unit 3 Inlet-R1	99/10/04	99/10/29
065715	Unit 3 Inlet-R2	99/10/04	99/10/29
065716	Unit 3 Inlet-R3	99/10/05	99/10/29
065764	Reagent Blank QT40	99/10/19	99/10/29
065766	Unit 1 Stack-FB	99/10/19	99/10/29
065767	Unit 1 Stack-R1	99/10/18	99/10/29
065768	Unit 1 Stack-R2	99/10/19	99/10/29
065769	Unit 1 Stack-R3	99/10/19	99/10/29
065770	Unit 1 Inlet-FB	99/10/19	99/10/29
065771	Unit 1 Inlet-R1	99/10/18	99/10/29
065772	Unit 1 Inlet-R2	99/10/19	99/10/29
065773	Unit 1 Inlet-R3	99/10/19	99/10/29
065782	Unit 2 Stack-FB	99/10/22	99/10/29
065783	Unit 2 Stack-R2	99/10/21	99/10/29
065784	Unit 2 Stack-R3	99/10/22	99/10/29
065786	Unit 2 Stack-R4	99/10/22	99/10/29
065787	Unit 2 Inlet-FB	99/10/22	99/10/29
065788	Unit 2 Inlet-R2	99/10/21	99/10/29
065789	Unit 2 Inlet-R3	99/10/22	99/10/29
065790	Unit 2 Inlet-R4	99/10/22	99/10/29
065831	Unit 3 Stack-FB	99/10/25	99/10/29
065832	Unit 3 Stack-R11	99/10/25	99/10/29

Comments:

Date 99/11/08

NOTICE OF SAMPLE RECEIPT-PHILIP ANALYTICAL SERVICES

Attention: Mark McDaniel
Client: Fossil Energy Research Corp.
Re Client Project: Navajo
FAX #: 949-859-7916
Phone #: 949-859-4466

Samples for: 'DH' Hg Trains
were received in good condition unless
indicated below.

SAMPLE LISTING

Philip ID #	Sample ID	Date Sampled	Date Received
065833	Unit 3 Stack-R2	99/10/26	99/10/29
065834	Unit 3 Stack-R3	99/10/26	99/10/29
065835	Unit 3 Inlet-FB	99/10/26	99/10/29
065836	Unit 3 Inlet-R1	99/10/25	99/10/29
065837	Unit 3 Inlet-R2	99/10/26	99/10/29
065838	Unit 3 Inlet-R3	99/10/26	99/10/29

Comments:

Date 99/11/08

NOTICE OF SAMPLE RECEIPT-PHILIP ANALYTICAL SERVICES

Attention: Mark McDanel
Client: Fossil Energy Research Corp.
Re Client Project: Craig
FAX #: 949-859-7916
Phone #: 949-859-4466

Samples for: Hg via 7471 and Cl (coal) via Bomb/IC.
were received in good condition unless indicated below.

SAMPLE LISTING

Philip ID #	Sample ID	Date Sampled	Date Received
065718	Unit 1 Coal-R1	99/10/05	99/10/29
065719	Unit 1 Coal-R2	99/10/05	99/10/29
065720	Unit 1 Coal-R3	99/10/05	99/10/29
065721	Unit 3 Coal-R1	99/10/04	99/10/29
065722	Unit 3 Coal-R2	99/10/04	99/10/29
065723	Unit 3 Coal-R3	99/10/04	99/10/29
065724	Unit 1 Ash-R1	99/09/28	99/10/29
065725	Unit 1 Ash-R2	99/09/28	99/10/29
065726	Unit 1 Ash-R3	99/09/28	99/10/29
065727	Unit 3 Ash-R1	99/10/04	99/10/29
065728	Unit 3 Ash-R2	99/10/04	99/10/29
065729	Unit 3 Ash-R3	99/10/04	99/10/29
065775	Unit 1 Coal-R1	99/10/18	99/10/29
065776	Unit 1 Coal-R2	99/10/19	99/10/29
065777	Unit 1 Coal-R3	99/10/19	99/10/29
065778	Unit 1 Ash-R1	99/10/18	99/10/29
065779	Unit 1 Ash-R2	99/10/18	99/10/29
065780	Unit 1 Ash-R3	99/10/19	99/10/29
065792	Unit 2 Coal-R2	99/10/22	99/10/29
065793	Unit 2 Coal-R3	99/10/22	99/10/29
065794	Unit 2 Coal-R4	99/10/22	99/10/29
065828	Unit 2 Ash-R2	99/10/21	99/10/29
065829	Unit 2 Ash-R3/4	99/10/22	99/10/29
065840	Unit 3 Coal-R1	99/10/25	99/10/29
065841	Unit 3 Coal-R2	99/10/26	99/10/29
065842	Unit 3 Coal-R3	99/10/26	99/10/29
065843	Unit 3 Ash-R1	99/10/25	99/10/29
065844	Unit 3 Ash-R2	99/10/26	99/10/29
065845	Unit 3 Ash-R3	99/10/26	99/10/29

Comments: _____

Date 99/11/08

Coronado, San Juan, Navajo

Mercury ICR Program

Consumables Record Form and Tracking Log

Reagent	Supplier	Lot Number	Date rec'd	Date opened	Opened by	Meets inspection criteria	Date blank taken	Tests used
Quartz Kimbler	Aqueous	NA	7/1/99	7/1/99	JB	Yes	10/19/99	
DI H_2O	Arrowhead/Pelton	NA	9/1/99	10/14/99	JB	Yes cond = 0.8 µmhos	w/ reagents	
30% H_2O_2	Fischer	992088	7/1/99	10/18/99	JB	Yes	w/ HNO_3/H_2O_2 reagent	10/19/99
conc HCl	Fischer	418110	7/1/99	10/14/99	JB	Yes	for cleaning no blank	
Nitric Acid	Fischer	118100	7/1/99	10/14/99	JB	Yes	10/19/99	
NaCl	Fischer	986410	7/20/99	7/20/99	JB	Yes	w/ hydroxylamine	10/19/99
Sulfuric acid	Fischer	318061	7/1/99	10/14/99	JB	Yes	w/ $KMnO_4$/H_2SO_4	10/19/99
Potassium Chloride	Fischer	986514	7/1/99	10/14/99	JB	Yes	10/19/99	
Hydroxylamine Sulfate	Fischer	991665	7/1/99	7/1/99	JB	Yes	10/19/99	
Potassium Permanganate	Fischer	987715	7/1/99	10/14/99	JB	Yes	w/ $KMnO_4$/H_2SO_4	10/19/99

Appendix D. Analytical Lab Reports

Gas Samples

Coal Samples

Certificate of Analysis

CLIENT INFORMATION

Attention: Mark McDaniel
Client Name: Fossil Energy Research Corp.
Project: Navajo
Project Desc: Navajo Unit 3

Address: 23342 C South Pointe
Laguna Hills, CA
CA 92653
Fax Number: 949-859-7916
Phone Number: 949-859-4466

LABORATORY INFORMATION

Contact: Ron McLeod
Project: AN991389
Date Received: 99/10/29
Date Reported: 00/01/04

Submission No.: 9K0075
Sample No.: 065830-065838

NOTES: ***'-' = not analysed '<' = less than Method Detection Limit (MDL) 'NA' = no data available***
LOQ can by determined for all analytes by multiplying the appropriate MDL X 3.33
Solids data is based on dry weight except for biota analyses.
Organic analyses are not corrected for extraction recovery standards except for isotope dilution methods, (i.e. CARB 429 PAH, all PCDD/F and DBD/DBF analyses)

Methods used by PASC are based upon those found in 'Standard Methods for the Examination of Water and Wastewater', Nineteenth Edition. Other methods are based on the principles of MISA or EPA methodologies. New York State: ELAP Identification Number 10756.

All work recorded herein has been done in accordance with normal professional standards using accepted testing methodologies, quality assurance and quality control procedures except where otherwise agreed to by the client and testing company in writing. Any and all use of these test results shall be limited to the actual cost of the pertinent analysis done. There is no other warranty expressed or implied. Your samples will be retained at PASC for a period of three weeks from receipt of data or as per contract.

COMMENTS: **Revised Report: Jan 28th 2000**

Certified by: _____

PASC - Certificate of Analysis

	Client ID:		Method Blank	Blank Spike #1	Blank Spike #1	Blank Spike #2	Blank Spike #2	Unit 3 Stack-FB	Unit 3 Stack-R11	Unit 3 Stack-R11
	Lab No.:		065830 99	065830 99	065830 99	065830 99	065830 99	065831 99	065832 99	065832 99
	Date Sampled:		-	-	-	-	-	99/10/25	99/10/25	99/10/25
Component	**MDL**	**Units**			% Recoveries		% Recoveries			Duplicate
Mercury - filter	0.010	ug	0.067	-	-	-	-	0.094	0.078	-
Mercury - filter - bulk	0.010	"	0.067	-	-	-	-	-	-	-
Mercury - hydroxylamine	0.010	"	<	0.096	96	0.094	94	-	-	-
Mercury - KCl	0.030	"	<	0.28	95	0.29	97	<0.10	<0.10	<0.10
Mercury - KMnO4	0.030	"	<	0.31	100	0.31	100	<0.05	5.3	5.3
Mercury - H202	0.010	"	<	0.086	86	0.10	100	<0.25	<0.25	<0.25

PASC - Certificate of Analysis

	Client ID:		Unit 3 Stack-R11	Unit 3 Stack-R11	Unit 3 Stack-R11	Unit 3 Stack-R11	Unit 3 Stack-R2	Unit 3 Stack-R3	Unit 3 Inlet-FB	Unit 3 Inlet-R1	Unit 3 Inlet-R1
	Lab No.:		065832 99	065832 99	065832 99	065832 99	065833 99	065834 99	065835 99	065836 99	065836 99
	Date Sampled:		99/10/25	99/10/25	99/10/25	99/10/25	99/10/26	99/10/26	99/10/26	99/10/25	99/10/25
Component	**MDL**	**Units**	M. Spike	MS % Rec.	MS Dup	MSD % Rec.					Duplicate
Mercury - filter	0.010	ug	-	-	-	-	0.034	0.019	-	-	-
Mercury - filter - bulk	0.010	"	-	-	-	-	-	-	<0.080	<0.080	<0.080
Mercury - hydroxylamine	0.010	"	-	-	-	-	-	-	-	-	-
Mercury - KCl	0.030	"	1.1	100	1.1	110	<0.10	<0.10	<0.10	4.0	3.9
Mercury - KMnO4	0.030	"	10	94	10	100	5.6	5.7	0.12	4.8	-
Mercury - H202	0.010	"	2.6	110	2.6	110	<0.25	<0.25	<0.25	<0.25	-

PASC - Certificate of Analysis

	Client ID:		Unit 3 Inlet-R1	Unit 3 Inlet-R1	Unit 3 Inlet-R1	Unit 3 Inlet-R1	Unit 3 Inlet-R2	Unit 3 Inlet-R3
	Lab No.:		065836 99	065836 99	065836 99	065836 99	065837 99	065838 99
	Date Sampled:		99/10/25	99/10/25	99/10/25	99/10/25	99/10/26	99/10/26
Component	**MDL**	**Units**	M. Spike	MS % Rec.	MS Dup	MSD % Rec.		
Mercury - filter	0.010	ug	-	-	-	-	-	-
Mercury - filter - bulk	0.010	"	1.7	110	1.7	110	<0.080	<0.080
Mercury - hydroxylamine	0.010	"	-	-	-	-	-	-
Mercury - KCl	0.030	"	5.0	107	5.1	110	0.63	0.93
Mercury - KMnO4	0.030	"	-	-	-	-	5.5	5.2
Mercury - H202	0.010	"	-	-	-	-	<0.25	<0.25

Batch Code:	**11253NFT**	
Mercury - filter	065830 99	
	065831 99	
	065832 99	
	065833 99	
	065834 99	
Run Date:	99/11/25	
Date of Sample Prep:	99/11/25	

Batch Code:	**11253NFT**	**11253NFT**
Mercury - filter - bulk	065830 99	065835 99
		065836 99
		065837 99
		065838 99
Run Date:	99/11/25	99/11/25
Date of Sample Prep:	99/11/25	99/11/25

Batch Code:	**11181BHY**
Mercury - hydroxylamine	065830 99
Run Date:	99/11/18
Date of Sample Prep:	99/11/18

Batch Code:	**11251NKC**	**01071NKC**
Mercury - KCl	065830 99	065836 99
	065831 99	065837 99
	065832 99	065838 99
	065833 99	
	065834 99	
	065835 99	
Run Date:	99/11/25	00/01/07
Date of Sample Prep:	99/11/25	00/01/07

Batch Code:	**11252NM4**
Mercury - KMnO4	065830 99
	065831 99
	065832 99
	065833 99
	065834 99
	065835 99
	065836 99
	065837 99
	065838 99
Run Date:	99/11/25
Date of Sample Prep:	99/11/25

Batch Code:	**11231NPO**
Mercury - H202	065830 99
	065831 99
	065832 99
	065833 99

	065834 99
	065835 99
	065836 99
	065837 99
	065838 99
Run Date:	99/11/23
Date of Sample Prep:	99/11/23

PHILIPS ANALYTICAL SERVICES--MERCURY SAMPLES

PROJECT DESCRIPTION: Navajo Unit 3

ZENON ID#	SAMPLE ID	SAMPLE TYPE	VOLUME, ml	CONCENTRATION, ug/L			STANDARD DEVIATION
65831	Unit 3 Stack Field Blank	KCL	1000	<0.03	<0.03		NA
		KMNO4	500	<0.03	<0.03		NA
65832	Unit 3 Stack R1	KCL	1000	0.116	0.091	0.098	0.018
		KMNO4	500	10.1	10.2	10.4	0.153
65833	Unit 3 Stack R2	KCL	1000	0.07	0.07		0.000
		KMNO4	500	11.3	11.3		0.000
65834	Unit 3 Stack R3	KCL	1000	0.073	0.08		0.005
		KMNO4	500	11	10.9		0.071
65835	Unit 3 Inlet Field Blank	KCL	1000	0.057	0.067		0.007
		KMNO4	500	<0.03	<0.03		NA
65836	Unit 3 Inlet R1	KCL	1000	4.494	4.312		0.129
		KMNO4	500	8.98	8.97		0.007
65837	Unit 3 Inlet R2	KCL	1000	0.657	0.678		0.015
		KMNO4	500	10.5	10.4		0.071
65838	Unit 3 Inlet R3	KCL	1000	1	0.962		0.027
		KMNO4	500	9.67	9.66		0.007

data received from EERC via e-mail

CALIBRATION CURVE, QC, CHECK STANDARD AND LAB SPIKING INFORMATION								
DATE:	02/22/2000							
	Calibration Standards:		0, 1, 5, 10, 20 ppb			R=0.9999		QC= 3.97 (4.00)
	Check Standard:(5.00)	Avg.=	5.10	Standard Deviation =		5± 0.110		
ZENON ID#	SAMPLE ID	SAMPLE TYPE	SPIKE AMOUNT (ppb)	SAMPLE READING(ug/L)		SPIKE READING(ug/L)		SPIKE RECOVERY%
65832	Unit 3 Stack R1	KCL	5	0.102		5.222		**102.40**
65832	Unit 3 Stack R1	KCL	10	0.102		10.696		**105.94**
65832	Unit 3 Stack R1	KMNO4	5	10.23		16		**115.40**
65832	Unit 3 Stack R1	KMNO4	10	10.23		20.3		**100.70**

PHILIP SERVICES

Certificate of Analysis

CLIENT INFORMATION

Attention: Mark McDaniel
Client Name: Fossil Energy Research Corp.
Project: Navajo
Project Desc: Navajo Unit 3

Address: 23342 C South Pointe
Laguna Hills, CA
CA 92653
Fax Number: 949-859-7916
Phone Number: 949-859-4466

LABORATORY INFORMATION

Contact: Ron McLeod
Project: AN991389
Date Received: 99/10/29
Date Reported: 99/12/16

Submission No.: 9K0075
Sample No.: 065839-065845

NOTES: ***'-' = not analysed '<' – less than Method Detection Limit (MDL) 'NA' = no data available***
LOQ can by determined for all analytes by multiplying the appropriate MDL X 3.33
Solids data is based on dry weight except for biota analyses.
Organic analyses are not corrected for extraction recovery standards except for isotope dilution methods, (i.e. CARB 429 PAH, all PCDD/F and DBD/DBF analyses)

Methods used by PASC are based upon those found in 'Standard Methods for the Examination of Water and Wastewater', Nineteenth Edition. Other methods are based on the principles of MISA or EPA methodologies. New York State: ELAP Identification Number 10756.

All work recorded herein has been done in accordance with normal professional standards using accepted testing methodologies, quality assurance and quality control procedures except where otherwise agreed to by the client and testing company in writing. Any and all use of these test results shall be limited to the actual cost of the pertinent analysis done. There is no other warranty expressed or implied. Your samples will be retained at PASC for a period of three weeks from receipt of data or as per contract.

COMMENTS:

Certified by: _____

PHILIP ANALYTICAL SERVICES CORPORATION
5555 North Service Road, Burlington, Ontario, Canada L7L 5H7 Tel: (905) 332-8788 Fax: (905) 332-9169

Certificate of Analysis

CLIENT INFORMATION		LABORATORY INFORMATION	
Attention:	Mark McDaniel	**Contact:**	Ron McLeod
Client Name:	Fossil Energy Research Corp.	**Project:**	AN991389
Project:	Navajo	**Date Received:**	99/10/29
Project Desc:	Navajo Unit 3	**Date Reported:**	99/12/16
Address:	23342 C South Pointe Laguna Hills, CA CA 92653	**Submission No.:**	9K0075
		Sample No.:	065839-065845
Fax Number:	949-859-7916		
Phone Number:	949-859-4466		

NOTES: *"-' = not analysed '<' = less than Method Detection Limit (MDL) 'NA' = no data available*
LOQ can by determined for all analytes by multiplying the appropriate MDL X 3.33
Solids data is based on dry weight except for biota analyses.
Organic analyses are not corrected for extraction recovery standards except for isotope dilution methods, (i.e. CARB 429 PAH, all PCDD/F and DBD/DBF analyses)

Methods used by PASC are based upon those found in 'Standard Methods for the Examination of Water and Wastewater', Nineteenth Edition. Other methods are based on the principles of MISA or EPA methodologies. New York State: ELAP Identification Number 10756.

All work recorded herein has been done in accordance with normal professional standards using accepted testing methodologies, quality assurance and quality control procedures except where otherwise agreed to by the client and testing company in writing. Any and all use of these test results shall be limited to the actual cost of the pertinent analysis done. There is no other warranty expressed or implied. Your samples will be retained at PASC for a period of three weeks from receipt of data or as per contract.

COMMENTS:

Certified by: _____

PASC - Certificate of Analysis

			Method Blank	Blank Spike	Blank Spike	Unit 3 Coal-R1	Unit 3 Coal-R2	Unit 3 Coal-R3	Unit 3 Ash-R1	Unit 3 Ash-R2	Unit 3 Ash-R3
	Client ID:		Method Blank	Blank Spike	Blank Spike	Unit 3 Coal-R1	Unit 3 Coal-R2	Unit 3 Coal-R3	Unit 3 Ash-R1	Unit 3 Ash-R2	Unit 3 Ash-R3
	Lab No.:		065839 99	065839 99	065839 99	065840 99	065841 99	065842 99	065843 99	065844 99	065845 99
	Date Sampled:		-	-	-	99/10/25	99/10/26	99/10/26	99/10/25	99/10/26	99/10/26
Component	**MDL**	**Units**			% Recoveries						
Total Chlorine (as Cl)	0.0005	(%)	-	-	-	0.020	0.020	<0.010	-	-	-
Mercury	0.04	mg/kg	<	1.0	100	0.040	<	<	<	<	<

Batch Code:	**1111LTA3**
Mercury	065839 99
	065840 99
	065841 99
	065842 99
	065843 99
	065844 99
	065845 99
Run Date:	99/11/12
Date of Sample Prep:	99/11/11

FRONTIER GEOSCIENCES INC.
ENVIRONMENTAL RESEARCH & SPECIALTY ANALYTICAL LABORATORY
(206) 622-6960 • FAX: (206) 622-6870
E-MAIL: INFO@FRONTIER.WA.COM
414 PONTIUS NORTH • SEATTLE, WA 98109

January 11, 2000

Mark McDannel
Fossil Energy Research Corp.
23342C South Pointe
Laguna Hills, CA 92653

SUBJECT: RESULTS FOR RUSH COAL SAMPLES

Dear Mr. McDannel,

Attached please find results for your rush samples. There are no analytical issues associated with these results and all of the associated quality control results look good.

Please call or e-mail (jamesk@frontier.wa.com) me if you have any questions or concerns.

Sincerely,

James Keithly

Frontier Geosciences Inc
Quality Assurance Data Tables

QA Table 1: Data Set Matrix Duplicate Analysis

Lab Sample ID	Lab Data Set	Rep 1 ng Hg/gram	Rep 2 ng Hg/gram	Average Result ng Hg/gram	Matrix Duplicate RPD
another client	990107	18.98 ng/g	17.35 ng/g	18.16	8.9%

QA Table 2: Data Set Matrix Spike Recovery (100ng Hg/sample Matrix Spike)

Lab Sample ID	Lab Data Set	Amt Spiked Per Gram ng Hg/gram	Spike Result ng Hg/gram	Amount Recovered ng Hg/gram	Matrix Spike Rec. %
another client	990107	193.87	229.57	211.41	109.0%
another client	990107	198.14	208.16	190.00	95.9%

Average Matrix Spike Recovery = 102.5%

QA Table 3: Standard Reference Material Recovery

IMPORTANT NOTE: SRM 1630a
Note the certified value for this SRM is being revised as a result of a recent round-robin study. Frontier was informed that the new certified value will be 85 ng/g. Therefore, we are altering the true value for this report.

Results: SRM 1630a Trace Mercury in Coal					
Lab Sample ID	Lab Data Set	Reference Value ng Hg/gram	Measured Value ng Hg/gram	Excepted Recovery Range (%)	Actual Recovery %
NIST 1630a	991217	85	97.2	75-125	114.3%

CONFIDENTIAL DATA

Table 1: Results of Mercury Analysis - Fossil Energy Research Corp.
Frontier Geosciences Inc

Sample ID	Lab Data Set	Total Hg ng Hg/gram	Reagent and System Blank Corrected: Matrix Duplicate ng Hg/gram	Matrix Duplicate RPD	Matrix Dup Average ng Hg/gram	As Received ppm Hg (ug Hg/gram)
Navajo 3, Run 1, 10/25/99	THg51-990107	35.01 ng/g				0.035
Navajo 3, Run 2, 10/26/99	THg51-990107	21.00 ng/g				0.021
Navajo 3, Run 3, 10/26/99	THg51-990107	24.03 ng/g				0.024

Estimated MDL - 990107	**0.002 ug Hg/g**

$$Hg_{dry} = Hg_{as\ received} / \left(1 - \frac{moisture}{100}\right)$$

Run	Hg_{dry}	$Hg_{as\ found}$	Coal moisture, %
1	.040	.035	11.53
2	.024	.021	12.13
3	.027	.024	12.35

COMMERCIAL TESTING & ENGINEERING CO.

GENERAL OFFICES: 1919 SOUTH HIGHLAND AVE., SUITE 210-B, LOMBARD, ILLINOIS 60148 • TEL: 630-953-9300 FAX: 630-953-9306

SINCE 1908®

SGS Member of the SGS Group (Société Générale de Surveillance)

ADDRESS ALL CORRESPONDENCE TO:
4665 PARIS STREET
SUITE B-200
DENVER, CO 80239
TEL: (303) 373-4772
FAX: (303) 373-4791

November 16, 1999

FOSSIL ENERGY RESEARCH
23342 C South Pointe
Laguna Hills CA 92653

Sample identification by
FOSSIL ENERGY RESEARCH CORP.

SAMPLE ID: NAVAJO 3
TEST 1
REQUISITION NO: 99-6693-1463

Kind of sample COAL

Sample taken by FOSSIL ENERGY RESEARCH CORP.

Date sampled October 25, 1999

Date received November 11, 1999

Analysis report no. 72-417095

SHORT PROXIMATE ANALYSIS

	As Received	Dry Basis
% Moisture	11.53	xxxxx
%Ash	6.90	7.80
Btu/lb	11299	12771
% Sulfur	0.47	0.53

MAF BTU/lb	13851		
lb SO_2/mm Btu	0.83	lb Sulfur/mm Btu	0.42
% Air Dry Loss	6.77	As Received Net Sample Wt.	339.40 g

Respectfully submitted,
COMMERCIAL TESTING & ENGINEERING CO.

Denver Laboratory

MEMBER ACIL

COMMERCIAL TESTING & ENGINEERING CO.

GENERAL OFFICES: 1919 SOUTH HIGHLAND AVE., SUITE 210-B, LOMBARD, ILLINOIS 60148 • TEL: 630-953-9300 FAX: 630-953-9306

SINCE 1908®

SGS Member of the SGS Group (Société Générale de Surveillance)

ADDRESS ALL CORRESPONDENCE TO:
4665 PARIS STREET
SUITE B-200
DENVER, CO 80239
TEL: (303) 373-4772
FAX: (303) 373-4791

November 16, 1999

FOSSIL ENERGY RESEARCH
23342 C South Pointe
Laguna Hills CA 92653

Sample identification by
FOSSIL ENERGY RESEARCH CORP.

SAMPLE ID: NAVAJO 3
TEST 2
REQUISITION NO: 99-6693-1463

Kind of sample COAL

Sample taken by FOSSIL ENERGY RESEARCH CORP.

Date sampled October 26, 1999

Date received November 11, 1999

Analysis report no. 72-417096

SHORT PROXIMATE ANALYSIS

	As Received	Dry Basis
% Moisture	12.13	xxxxx
%Ash	6.80	7.74
Btu/lb	11159	12700
% Sulfur	0.50	0.57

MAF BTU/lb	13765		
lb SO_2/mm Btu	0.90	lb Sulfur/mm Btu	0.45
% Air Dry Loss	6.30	As Received Net Sample Wt.	879.00 g

Respectfully submitted,
COMMERCIAL TESTING & ENGINEERING CO.

Denver Laboratory

MEMBER ACIL

COMMERCIAL TESTING & ENGINEERING CO.

GENERAL OFFICES: 1919 SOUTH HIGHLAND AVE., SUITE 210-B, LOMBARD, ILLINOIS 60148 • TEL: 630-953-9300 FAX: 630-953-9306

SINCE 1908®

SGS Member of the SGS Group (Société Générale de Surveillance)

ADDRESS ALL CORRESPONDENCE TO:
4665 PARIS STREET
SUITE B-200
DENVER, CO 80239
TEL: (303) 373-4772
FAX: (303) 373-4791

November 16, 1999

FOSSIL ENERGY RESEARCH
23342 C South Pointe
Laguna Hills CA 92653

Sample identification by
FOSSIL ENERGY RESEARCH CORP.

SAMPLE ID: NAVAJO 3
TEST 3
REQUISITION NO: 99-6693-1463

Kind of sample COAL

Sample taken by FOSSIL ENERGY RESEARCH CORP.

Date sampled October 26, 1999

Date received November 11, 1999

Analysis report no. 72-417097

SHORT PROXIMATE ANALYSIS

	As Received	Dry Basis
% Moisture	12.35	xxxxx
%Ash	6.23	7.11
Btu/lb	11263	12850
% Sulfur	0.49	0.56

MAF BTU/lb	13834		
lb SO_2/mm Btu	0.87	lb Sulfur/mm Btu	0.44
% Air Dry Loss	6.42	As Received Net Sample Wt.	848.60 g

Respectfully submitted,
COMMERCIAL TESTING & ENGINEERING CO.

Denver Laboratory

MEMBER ACIL

Appendix E. Audit Data Sheets

(no audits performed)

Appendix F. List of Participants

List of Participants		
Navajo Unit 3 Mercury ICR Testing		
Name	*Position on Test Team*	*Affiliation*
Mark McDannel	Team Leader, Data Reduction	Fossil Energy Research Corp.
Arlene Bell	Project Chemist, Sample Recovery and Custody	Delta Air Quality Services
Dave Wonderly	Outlet Sampling Leader	Delta Air Quality Services
Lawrence Pedregon	Outlet Assistant	Delta Air Quality Services
Paul Anderson	Inlet Sampling Leader	Fossil Energy Research Corp.
Jerry Bovee	Inlet Assistant	Fossil Energy Research Corp.
Ron McLeod	Laboratory Analyses	Philip Analytical Services
Paul Ostapuk	Site Contact, Unit Monitoring, and Coal Sampling	Salt River Project
Dan Casiraro	Corporate Environmental contact	Salt River Project
Abra Bennett	Observer, process monitoring and fuel sampling	Battelle, under contract to EPA
Tony Underwood	Observer, gas sampling and sample recovery	ETS, under subcontract to Battelle

Appendix G. Additional Information

CEMS Data

Boiler, CEMS, and Scrubber Data

ESP Data

CEM Date			
Navajo Generating Station			
Mercury Source Testing			
	Begin	Stack Flow	Stack Temp
Date	Hour	kcfh	deg F
10/25/1999	0:00	121758	113.3
10/25/1999	1:00	122724	113.6
10/25/1999	2:00	122999	114.4
10/25/1999	3:00	123413	114.8
10/25/1999	4:00	123652	112.7
10/25/1999	5:00	123352	111.2
10/25/1999	6:00	123780	109.9
10/25/1999	7:00	124100	111.6
10/25/1999	8:00	124876	112.2
10/25/1999	9:00	124636	112.1
10/25/1999	10:00	124560	112.8
10/25/1999	11:00	123701	113.2
10/25/1999	12:00	122868	114.5
10/25/1999	13:00	119049	116.2
10/25/1999	14:00	118283	112.8
10/25/1999	15:00	117533	112.4
10/25/1999	16:00	120729	112.5
10/25/1999	17:00	120960	115.9
10/25/1999	18:00	121029	115.2
10/25/1999	19:00	120446	113.3
10/25/1999	20:00	120178	113.3
10/25/1999	21:00	120124	113.3
10/25/1999	22:00	120345	114.9
10/25/1999	23:00	120820	114.1
10/26/1999	0:00	121330	112.9
10/26/1999	1:00	121027	112.5
10/26/1999	2:00	121736	112.3
10/26/1999	3:00	121608	114.3
10/26/1999	4:00	121421	111.8
10/26/1999	5:00	120752	110.5
10/26/1999	6:00	121306	109.8
10/26/1999	7:00	121874	111
10/26/1999	8:00	122080	112
10/26/1999	9:00	122286	111.4
10/26/1999	10:00	122459	112.2
10/26/1999	11:00	122097	113.1
10/26/1999	12:00	122574	114.5
10/26/1999	13:00	122577	116.3
10/26/1999	14:00	122330	115.8
10/26/1999	15:00	121761	114.5
10/26/1999	16:00	121160	114.4
10/26/1999	17:00	120797	114.7
10/26/1999	18:00	120132	115.1
10/26/1999	19:00	120471	114.2
10/26/1999	20:00	120716	114.5
10/26/1999	21:00	120500	114.3
10/26/1999	22:00	120593	115.1
10/26/1999	23:00	121222	115.5

Run 1
Avg flow 120,062
Avg T 114

Run 2
Avg flow 122,183
Avg T 112

Run 3
Avg flow 122,416
Avg T 115

Navajo Generating Station

Plant Operational Data during Mercury Testing

DATE	TIME	GROSS MW	SO2 lb/mmBTU	NOx lb/mmBTU	CO2 %	3PrHtInlet degF	3PrHtOutlet degF	Coal Flow [kpph]	Main Stm Flow [kpph]	Main Stm Temp [deg F]	Main Stm Press [psig]	Econ Out O2 'A' [%]	Econ Out O2 'B' [%]	Number of Mills	A Limestone Feed (kpph)	B Limestone Feed (kpph)	A DP ["H2O]	B DP ["H2O]	LS Feed Density [% Solids]	A pH	B pH
Run 1																					
10/25/1999	15:00	779.8	0.039	0.32	11.82	154.9	274.1	654.2	5463.3	997.7	3543.2	3.2	3.4	5	22.6	32.4	2.2	2.4	24.8	5.6	5.6
10/25/1999	15:01	780	0.039	0.31	11.81	154.9	274.1	661.7	5472.1	996.4	3560.8	3.1	3.3	5	24.4	32.3	2.3	2.4	24.8	5.6	5.6
10/25/1999	15:02	782.7	0.038	0.31	11.83	154.9	274.1	661.1	5482.7	996.4	3561.5	3.3	3.4	5	20.3	32.2	2.3	2.5	24.7	5.6	5.6
10/25/1999	15:03	783.1	0.039	0.31	11.85	154.9	274.1	657.2	5470.1	997.0	3556.5	3.3	3.5	5	22.0	32.1	2.3	2.5	24.8	5.6	5.6
10/25/1999	15:04	782.5	0.040	0.31	11.91	154.9	274.1	657.9	5481.4	997.3	3556.4	3.4	3.4	5	30.7	32.0	2.3	2.4	24.7	5.6	5.6
10/25/1999	15:05	781.7	0.039	0.32	11.9	154.9	274.1	659.0	5482.3	996.8	3549.3	3.5	3.5	5	17.1	31.9	2.3	2.4	24.7	5.6	5.6
10/25/1999	15:06	780.1	0.040	0.32	11.81	154.9	274.1	661.6	5468.9	995.5	3545.8	3.4	3.4	5	18.6	31.8	2.3	2.4	24.7	5.6	5.6
10/25/1999	15:07	779.3	0.039	0.33	11.78	154.9	274.1	662.3	5456.2	994.4	3542.6	3.3	3.4	5	21.1	31.7	2.3	2.4	24.8	5.6	5.6
10/25/1999	15:08	778.8	0.038	0.33	11.77	154.9	274.1	665.5	5492.5	993.9	3548.6	3.4	3.5	5	19.5	31.7	2.3	2.4	24.8	5.6	5.6
10/25/1999	15:09	779.1	0.040	0.32	11.8	154.9	274.1	664.9	5469.4	993.6	3542.5	3.5	3.6	5	14.7	31.6	2.3	2.4	24.8	5.6	5.6
10/25/1999	15:10	778.2	0.039	0.32	11.85	154.9	274.1	668.0	5479.2	993.7	3539.5	3.6	3.8	5	18.7	31.5	2.3	2.5	24.8	5.6	5.6
10/25/1999	15:11	778.7	0.039	0.32	11.82	154.9	274.1	666.5	5490.6	993.1	3546.5	3.5	3.8	5	21.1	31.5	2.3	2.5	24.8	5.6	5.6
10/25/1999	15:12	780.1	0.041	0.32	11.77	154.9	274.1	668.0	5473.0	991.6	3555.8	3.4	3.4	5	23.9	31.4	2.3	2.4	24.8	5.6	5.6
10/25/1999	15:13	782.1	0.040	0.33	11.67	154.9	274.1	669.0	5481.5	990.3	3554.2	3.2	3.4	5	20.6	31.3	2.3	2.5	24.7	5.6	5.6
10/25/1999	15:14	781.7	0.039	0.33	11.65	154.9	274.1	669.7	5481.0	990.4	3548.3	3.3	3.3	5	26.0	31.3	2.3	2.4	24.8	5.6	5.6
10/25/1999	15:15	780.9	0.040	0.32	11.75	154.9	274.1	668.2	5484.1	992.7	3550.5	3.2	3.2	5	23.1	31.2	2.3	2.4	24.9	5.6	5.6
10/25/1999	15:16	781.6	0.039	0.31	11.92	154.9	274.1	666.7	5481.5	995.8	3551.9	3.4	3.3	5	20.1	31.2	2.3	2.4	24.8	5.6	5.6
10/25/1999	15:17	781.4	0.039	0.30	11.96	154.9	274.1	663.5	5481.6	997.9	3552.3	3.5	3.4	5	21.9	31.1	2.3	2.4	24.7	5.6	5.6
10/25/1999	15:18	781.3	0.040	0.31	11.95	154.9	274.1	666.3	5493.4	997.6	3552.3	3.6	3.5	5	26.5	31.1	2.3	2.5	24.8	5.6	5.6
10/25/1999	15:19	782	0.040	0.31	11.93	154.9	274.1	667.0	5468.0	995.3	3554.0	3.4	3.4	5	11.7	31.0	2.3	2.5	24.7	5.6	5.6
10/25/1999	15:20	781.9	0.040	0.32	11.8	154.9	274.1	668.7	5491.4	993.2	3556.7	3.3	3.4	5	24.1	31.0	2.3	2.5	24.8	5.6	5.6
10/25/1999	15:21	779.4	0.039	0.32	11.72	154.9	274.1	670.0	5474.8	992.2	3542.8	3.4	3.6	5	28.8	30.9	2.3	2.5	24.8	5.6	5.6
10/25/1999	15:22	779.1	0.040	0.31	11.78	154.9	274.1	670.2	5467.8	992.3	3549.7	3.2	3.5	5	29.6	30.9	2.3	2.4	24.7	5.6	5.6
10/25/1999	15:23	779.6	0.040	0.31	11.81	154.9	274.1	671.0	5471.0	993.2	3551.0	3.2	3.5	5	28.1	30.9	2.3	2.4	24.7	5.6	5.6
10/25/1999	15:24	780.8	0.040	0.32	11.78	154.9	274.1	669.6	5483.6	994.3	3559.9	3.2	3.3	5	27.2	30.8	2.3	2.4	24.8	5.6	5.6
10/25/1999	15:25	783.1	0.041	0.31	11.85	154.9	274.1	665.4	5472.9	996.3	3564.1	3.1	3.3	5	24.0	30.8	2.3	2.5	24.7	5.6	5.6
10/25/1999	15:26	784	0.041	0.31	11.89	154.9	274.1	661.1	5457.6	998.3	3564.1	3.2	3.4	5	27.8	30.8	2.3	2.5	24.8	5.6	5.6
10/25/1999	15:27	785.1	0.040	0.31	11.95	154.9	274.1	656.0	5418.8	999.7	3569.6	3.2	3.4	5	22.4	30.8	2.3	2.5	24.8	5.6	5.6
10/25/1999	15:28	785.1	0.040	0.31	11.96	154.9	274.1	656.8	5428.3	1000.1	3567.1	3.0	3.5	5	24.9	30.8	2.3	2.4	24.8	5.6	5.6
10/25/1999	15:29	784.6	0.041	0.32	11.91	154.9	274.1	652.7	5440.7	1000.1	3560.9	3.0	3.4	5	31.7	30.8	2.3	2.4	24.8	5.6	5.6
10/25/1999	15:30	783.5	0.040	0.32	11.89	154.9	274.1	652.1	5453.1	1000.6	3556.4	3.1	3.3	5	28.2	30.7	2.3	2.4	24.9	5.6	5.6
10/25/1999	15:31	782.1	0.039	0.31	11.92	154.9	274.1	650.4	5456.6	1001.0	3546.1	3.1	3.4	5	20.8	30.7	2.3	2.4	24.8	5.6	5.6
10/25/1999	15:32	779.1	0.040	0.31	11.97	154.9	274.1	652.4	5460.9	1000.6	3539.4	3.2	3.5	5	25.9	30.6	2.3	2.4	24.9	5.6	5.6
10/25/1999	15:33	778.3	0.039	0.30	11.97	154.9	274.1	657.5	5441.4	999.4	3541.4	3.3	3.6	5	30.2	30.6	2.3	2.4	24.8	5.6	5.6
10/25/1999	15:34	776.9	0.039	0.31	11.94	154.9	274.1	669.6	5466.1	997.2	3532.7	3.5	3.7	5	22.4	30.6	2.3	2.5	24.8	5.6	5.6
10/25/1999	15:35	776.7	0.038	0.32	11.84	154.9	274.1	672.5	5476.4	994.6	3543.8	3.6	3.8	5	33.8	30.6	2.4	2.5	24.8	5.6	5.6
10/25/1999	15:36	778.6	0.039	0.32	11.78	154.9	274.1	667.1	5429.8	992.7	3541.5	3.6	3.7	5	33.4	30.5	2.4	2.6	24.8	5.6	5.6
10/25/1999	15:37	778.9	0.040	0.33	11.72	154.9	274.1	672.6	5459.0	990.6	3543.8	3.4	3.6	5	35.4	30.5	2.3	2.5	24.8	5.6	5.6
10/25/1999	15:38	779.1	0.040	0.34	11.66	154.9	274.1	673.1	5449.1	988.5	3537.3	3.4	3.6	5	35.2	30.4	2.3	2.5	24.8	5.6	5.6
10/25/1999	15:39	777.9	0.040	0.34	11.64	154.9	274.1	680.1	5475.8	987.8	3538.6	3.5	3.6	5	41.4	30.6	2.3	2.5	24.7	5.6	5.6
10/25/1999	15:40	778.4	0.040	0.33	11.68	154.9	274.1	676.4	5480.4	988.8	3543.6	3.3	3.5	5	27.7	30.8	2.3	2.5	24.7	5.6	5.6
10/25/1999	15:41	778.5	0.039	0.33	11.78	154.9	274.1	678.4	5457.8	990.4	3548.1	3.4	3.6	5	26.5	30.8	2.3	2.5	24.8	5.6	5.6

Navajo Generating Station

Plant Operational Data during Mercury Testing

DATE	TIME	GROSS MW	SO2 lb/mmBTU	NOx lb/mmBTU	CO2 %	3PrHtInlet degF	3PrHtOutlet degF	Coal Flow [kpph]	Main Stm Flow [kpph]	Main Stm Temp [deg F]	Main Stm Press [psig]	Econ Out O2 'A' [%]	Econ Out O2 'B' [%]	Number of Mills	A Limestone Feed (kpph)	B Limestone Feed (kpph)	A DP ["H2O]	B DP ["H2O]	LS Feed Density [% Solids]	A pH	B pH
10/25/1999	15:42	780	0.039	0.33	11.81	154.9	274.1	676.0	5445.3	991.6	3553.9	3.2	3.6	5	30.7	30.8	2.4	2.5	24.7	5.6	5.6
10/25/1999	15:43	781.8	0.039	0.32	11.87	154.9	274.1	676.9	5502.2	992.3	3563.5	3.3	3.6	5	21.5	30.7	2.3	2.5	24.8	5.6	5.6
10/25/1999	15:44	783.7	0.040	0.32	11.85	154.9	274.1	675.5	5492.4	993.0	3565.3	3.4	3.7	5	32.1	30.7	2.3	2.5	24.8	5.6	5.6
10/25/1999	15:45	784.4	0.041	0.32	11.85	154.9	274.1	674.7	5493.5	993.7	3575.3	3.3	3.6	5	32.8	30.8	2.3	2.5	24.8	5.6	5.6
10/25/1999	15:46	785.4	0.041	0.32	11.84	154.9	274.1	670.6	5466.1	994.4	3576.7	2.9	3.4	5	29.9	30.8	2.3	2.5	24.8	5.6	5.6
10/25/1999	15:47	785.8	0.041	0.32	11.79	154.9	274.1	661.3	5455.5	995.7	3571.7	2.9	3.4	5	30.8	30.7	2.3	2.5	24.8	5.6	5.6
10/25/1999	15:48	785	0.041	0.32	11.83	154.9	274.1	657.1	5449.1	998.3	3572.8	2.9	3.4	5	26.0	30.7	2.3	2.4	24.8	5.6	5.6
10/25/1999	15:49	784.5	0.040	0.31	11.94	154.9	274.1	651.3	5444.3	1000.7	3563.8	2.9	3.3	5	37.2	30.6	2.2	2.4	24.7	5.6	5.6
10/25/1999	15:50	782.5	0.039	0.31	12.03	154.9	274.1	652.1	5485.6	1001.9	3558.7	2.9	3.3	5	37.1	30.6	2.2	2.4	24.8	5.6	5.6
10/25/1999	15:51	780.8	0.039	0.31	12.04	154.9	274.1	650.4	5474.7	1001.5	3544.5	3.1	3.4	5	28.4	30.6	2.2	2.4	24.7	5.6	5.6
10/25/1999	15:52	777.7	0.039	0.31	12.01	154.9	274.1	655.3	5513.6	1000.1	3539.8	3.2	3.5	5	26.7	36.2	2.3	2.4	24.8	5.6	5.6
10/25/1999	15:53	777.2	0.038	0.30	11.97	154.9	274.1	665.2	5504.5	997.7	3539.8	3.3	3.6	5	27.6	35.3	2.3	2.5	24.8	5.6	5.6
10/25/1999	15:54	777	0.038	0.31	11.92	154.9	274.1	674.0	5501.8	995.2	3543.2	3.5	3.7	5	25.0	34.1	2.3	2.5	24.8	5.6	5.6
10/25/1999	15:55	776.4	0.039	0.31	11.8	154.9	274.1	673.6	5515.0	992.2	3523.1	3.7	4.1	5	29.3	33.5	2.3	2.5	24.8	5.6	5.6
10/25/1999	15:56	778	0.039	0.32	11.76	154.9	274.1	680.2	5496.4	988.6	3584.6	3.3	3.4	5	27.3	33.1	2.3	2.5	24.9	5.6	5.6
10/25/1999	15:57	788.2	0.041	0.33	11.63	154.9	274.1	662.5	5379.6	987.0	3590.9	2.7	2.7	5	20.9	32.8	2.3	2.5	24.8	5.6	5.6
10/25/1999	15:58	789.7	0.040	0.34	11.52	154.9	274.1	629.4	5390.0	989.3	3568.5	2.4	2.5	5	29.9	32.7	2.2	2.4	24.9	5.6	5.6
10/25/1999	15:59	784.7	0.040	0.31	11.66	154.9	274.1	611.5	5490.8	998.4	3537.3	2.8	2.8	5	36.2	32.5	2.2	2.4	24.8	5.6	5.6
10/25/1999	16:00	775.6	0.040	0.28	12.22	154.9	274.1	612.2	5558.8	1004.9	3513.9	3.3	3.1	5	28.5	32.5	2.2	2.3	24.8	5.6	5.6
10/25/1999	16:01	769.4	0.039	0.28	12.48	154.9	274.1	618.2	5554.5	1002.5	3507.9	3.3	3.2	5	30.5	32.8	2.2	2.3	24.8	5.6	5.6
10/25/1999	16:02	764.6	0.037	0.29	12.26	154.9	274.1	647.8	5600.9	995.1	3510.0	3.7	3.8	5	31.6	33.0	2.3	2.4	24.7	5.6	5.6
10/25/1999	16:03	766.6	0.036	0.31	11.91	154.9	275.3	676.0	5652.6	986.9	3520.9	4.1	4.0	6	34.4	33.0	2.4	2.5	24.8	5.6	5.6
10/25/1999	16:04	775.7	0.037	0.32	11.77	154.9	276.4	702.1	5700.7	975.2	3538.1	4.3	4.3	6	26.6	32.9	2.5	2.6	24.8	5.6	5.6
10/25/1999	16:05	786.2	0.039	0.35	11.55	154.9	276.4	733.8	5744.3	959.0	3560.9	4.4	4.2	6	27.6	32.8	2.6	2.8	24.8	5.6	5.6
10/25/1999	16:06	795.8	0.040	0.38	11.31	154.9	276.4	737.5	5728.2	946.1	3586.8	4.1	4.2	6	30.7	32.7	2.6	2.8	24.9	5.6	5.6
10/25/1999	16:07	803.3	0.041	0.41	11.2	154.9	276.4	730.6	5733.8	942.3	3602.2	3.9	4.1	6	24.1	32.6	2.7	2.8	24.8	5.6	5.6
10/25/1999	16:08	807.2	0.043	0.43	11.28	154.9	276.4	719.1	5714.0	945.8	3602.5	3.4	3.4	6	30.1	32.5	2.5	2.7	24.8	5.6	5.6
10/25/1999	16:09	804.7	0.045	0.43	11.43	154.9	276.4	723.8	5787.3	953.9	3602.5	3.2	3.2	6	28.8	32.5	2.4	2.5	24.8	5.6	5.6
10/25/1999	16:10	801.4	0.045	0.42	11.56	154.9	276.4	720.5	5801.4	963.8	3582.2	3.1	3.1	6	35.6	32.4	2.4	2.5	24.8	5.6	5.6
10/25/1999	16:11	803.6	0.043	0.38	11.87	154.9	276.4	730.3	5907.7	974.2	3629.1	3.3	3.4	6	34.4	32.3	2.4	2.6	24.8	5.6	5.6
10/25/1999	16:12	810.9	0.042	0.37	12.09	154.9	276.4	709.2	5761.2	981.6	3638.9	3.2	3.5	6	29.0	32.2	2.5	2.6	24.8	5.6	5.6
10/25/1999	16:13	814.4	0.042	0.37	12.2	154.9	276.4	708.3	5737.1	984.3	3635.5	3.2	3.2	6	35.4	32.2	2.4	2.6	24.8	5.6	5.6
10/25/1999	16:14	815.1	0.043	0.38	12.11	154.9	276.4	705.4	5718.1	984.2	3621.3	3.0	3.0	6	37.3	32.2	2.3	2.5	24.8	5.6	5.6
10/25/1999	16:15	812.4	0.043	0.37	12.07	154.9	276.4	710.7	5769.0	985.6	3621.3	3.1	3.2	6	27.4	32.2	2.3	2.5	24.7	5.6	5.6
10/25/1999	16:16	809.8	0.042	0.36	12.09	154.9	276.4	710.9	5781.8	988.2	3602.9	3.2	3.2	6	26.4	32.2	2.4	2.5	24.8	5.6	5.6
10/25/1999	16:17	812.2	0.042	0.34	12.21	154.9	276.4	712.2	5764.5	990.0	3624.9	3.5	3.4	6	40.9	32.9	2.5	2.6	24.8	5.6	5.6
10/25/1999	16:18	813.4	0.041	0.35	12.18	154.9	276.4	706.9	5733.9	989.6	3609.0	3.7	3.5	6	43.7	33.0	2.5	2.6	24.9	5.6	5.6
10/25/1999	16:19	811.9	0.043	0.36	12.07	154.9	276.4	719.7	5773.5	987.5	3623.5	3.6	3.4	6	12.7	33.5	2.4	2.6	24.9	5.6	5.6
10/25/1999	16:20	813.9	0.043	0.37	12.01	154.9	276.4	707.4	5682.0	985.3	3607.0	3.5	3.3	6	22.3	34.0	2.4	2.5	25.0	5.6	5.6
10/25/1999	16:21	811	0.043	0.38	11.92	154.9	276.4	721.8	5747.5	984.2	3602.7	3.4	3.4	6	25.1	34.6	2.4	2.5	24.9	5.6	5.6
10/25/1999	16:22	811.6	0.043	0.38	11.89	154.9	276.4	719.5	5742.1	984.8	3612.3	3.4	3.3	6	23.3	35.1	2.4	2.5	24.9	5.6	5.6
10/25/1999	16:23	812.7	0.042	0.37	12.01	154.9	276.4	716.0	5721.0	986.4	3615.2	3.5	3.5	6	24.0	35.1	2.5	2.5	24.8	5.6	5.6
10/25/1999	16:24	813.3	0.042	0.37	11.96	154.9	276.4	714.9	5703.5	987.5	3614.5	3.3	3.4	6	24.2	35.1	2.4	2.5	24.9	5.6	5.6

Navajo Generating Station

Plant Operational Data during Mercury Testing

DATE	TIME	GROSS MW	SO2 lb/mmBTU	NOx lb/mmBTU	CO2 %	3PrHtInlet degF	3PrHtOutlet degF	Coal Flow [kpph]	Main Stm Flow [kpph]	Main Stm Temp [deg F]	Main Stm Press [psig]	Econ Out O2 'A' [%]	Econ Out O2 'B' [%]	Number of Mills	A Limestone Feed (kpph)	B Limestone Feed (kpph)	A DP ["H2O]	B DP ["H2O]	LS Feed Density [% Solids]	A pH	B pH
10/25/1999	16:25	813	0.042	0.37	12.03	154.9	276.4	716.7	5706.4	988.6	3614.5	3.5	3.4	6	42.1	35.1	2.4	2.5	25.0	5.6	5.6
10/25/1999	16:26	812.8	0.043	0.37	12.05	154.9	276.4	716.1	5689.2	989.7	3607.8	3.5	3.4	6	30.4	35.1	2.4	2.5	24.9	5.6	5.6
10/25/1999	16:27	811.5	0.042	0.37	12.06	154.9	276.4	719.7	5724.4	990.5	3605.2	3.5	3.5	6	24.6	35.7	2.5	2.5	24.9	5.6	5.6
10/25/1999	16:28	812	0.043	0.37	12.03	154.9	276.4	719.2	5703.6	990.4	3615.1	3.3	3.4	6	28.4	35.6	2.4	2.5	24.9	5.6	5.6
10/25/1999	16:29	812.5	0.043	0.38	12.02	154.9	277.5	717.1	5698.9	990.0	3608.9	3.4	3.4	6	29.0	35.6	2.4	2.5	24.8	5.6	5.6
10/25/1999	16:30	813	0.042	0.38	11.94	154.9	278.6	718.5	5677.3	990.4	3620.4	3.1	3.3	6	26.7	35.5	2.4	2.5	24.8	5.6	5.6
10/25/1999	16:31	813.4	0.042	0.37	12.01	154.9	278.6	713.5	5641.6	992.5	3615.4	3.1	3.3	6	38.3	35.6	2.4	2.5	25.0	5.6	5.6
10/25/1999	16:32	813	0.041	0.37	12.04	154.9	278.6	712.1	5643.6	995.0	3613.6	3.2	3.2	6	35.9	35.5	2.4	2.5	24.9	5.6	5.6
10/25/1999	16:33	812.2	0.042	0.36	12.12	154.9	278.6	709.4	5656.6	997.1	3603.2	3.2	3.3	6	32.1	35.4	2.4	2.5	24.9	5.6	5.6
10/25/1999	16:34	811.4	0.042	0.36	12.17	154.9	278.6	711.3	5672.3	997.7	3607.7	3.3	3.3	6	36.0	35.4	2.4	2.5	24.9	5.6	5.6
10/25/1999	16:35	811.6	0.041	0.37	12.15	154.9	278.6	709.4	5647.2	997.2	3603.4	3.3	3.3	6	37.6	35.4	2.4	2.5	24.8	5.6	5.6
10/25/1999	16:36	809.9	0.042	0.37	12.07	154.9	278.6	711.2	5663.7	996.6	3595.8	3.4	3.5	6	28.2	35.3	2.4	2.5	24.8	5.6	5.6
10/25/1999	16:37	809.4	0.041	0.37	12.02	154.9	278.6	714.3	5680.6	995.5	3599.5	3.4	3.4	6	34.4	35.7	2.4	2.5	24.8	5.6	5.6
10/25/1999	16:38	810.1	0.041	0.37	12.05	154.9	278.6	715.1	5687.9	994.3	3599.5	3.3	3.5	6	33.9	35.8	2.4	2.6	24.8	5.6	5.6
10/25/1999	16:39	811.2	0.042	0.37	11.97	154.9	278.6	715.3	5669.7	993.4	3604.8	3.4	3.4	6	35.8	35.7	2.4	2.5	24.8	5.6	5.6
10/25/1999	16:40	811.6	0.042	0.37	11.97	154.9	278.6	714.8	5643.2	993.6	3610.1	3.4	3.5	6	23.7	35.6	2.4	2.5	24.9	5.6	5.6
10/25/1999	16:41	812.1	0.041	0.37	11.99	154.9	278.6	711.7	5627.7	994.0	3614.5	3.3	3.4	6	18.7	35.6	2.4	2.5	24.8	5.6	5.6
10/25/1999	16:42	811.8	0.042	0.37	12.01	154.9	278.6	711.7	5640.5	994.8	3609.9	3.3	3.3	6	26.4	35.6	2.4	2.5	24.9	5.6	5.6
10/25/1999	16:43	811.9	0.042	0.37	12.02	154.9	278.6	706.5	5630.8	996.8	3620.9	3.3	3.1	6	31.2	35.6	2.4	2.6	24.9	5.6	5.6
10/25/1999	16:44	811.8	0.042	0.37	12.03	154.9	278.6	701.9	5620.7	998.2	3610.8	3.3	3.1	6	28.1	35.5	2.4	2.5	24.9	5.6	5.6
10/25/1999	16:45	810.8	0.042	0.37	12.08	154.9	278.6	704.7	5654.3	998.9	3601.7	3.2	3.2	6	23.6	35.5	2.4	2.5	24.8	5.6	5.6
10/25/1999	16:46	808.2	0.042	0.36	12.13	154.9	278.6	702.2	5650.1	999.6	3601.7	3.4	3.2	6	29.2	35.5	2.4	2.5	24.8	5.6	5.6
10/25/1999	16:47	807.4	0.042	0.36	12.14	154.9	278.6	703.8	5648.8	999.6	3609.7	3.3	3.1	6	34.7	35.5	2.4	2.5	24.9	5.6	5.6
10/25/1999	16:48	809.3	0.041	0.37	12.14	154.9	278.6	702.0	5642.7	999.8	3599.6	3.3	3.2	6	41.6	35.4	2.4	2.5	24.9	5.6	5.6
10/25/1999	16:49	806.6	0.041	0.37	12.05	154.9	278.6	702.0	5617.8	1000.0	3594.8	3.5	3.2	6	23.4	35.4	2.4	2.6	24.8	5.6	5.6
10/25/1999	16:50	806.4	0.042	0.36	12.1	154.9	278.6	702.3	5625.4	999.9	3590.5	3.5	3.4	6	28.1	35.4	2.4	2.5	24.8	5.6	5.6
10/25/1999	16:51	805.6	0.042	0.36	12.13	154.9	278.6	703.8	5636.2	998.3	3583.9	3.5	3.5	6	34.6	35.4	2.4	2.5	24.8	5.6	5.6
10/25/1999	16:52	805.1	0.041	0.37	12.02	154.9	278.6	708.4	5645.7	996.2	3582.4	3.5	3.4	6	33.5	42.4	2.4	2.6	24.8	5.6	5.6
10/25/1999	16:53	805.1	0.041	0.37	12.01	154.9	278.6	711.6	5663.9	994.9	3588.2	3.5	3.3	6	33.4	41.6	2.4	2.6	24.8	5.6	5.6
10/25/1999	16:54	805.7	0.041	0.37	11.94	154.9	278.6	708.9	5645.2	993.9	3586.7	3.6	3.5	6	30.1	40.5	2.5	2.6	24.8	5.6	5.6
10/25/1999	16:55	805.8	0.041	0.37	11.93	154.9	278.6	711.6	5685.7	993.4	3594.1	3.7	3.5	6	33.3	39.8	2.5	2.6	24.8	5.6	5.6
10/25/1999	16:56	806.5	0.042	0.37	11.93	154.9	278.6	708.4	5633.6	992.9	3589.1	3.4	3.5	6	36.1	39.3	2.4	2.6	24.9	5.6	5.6
10/25/1999	16:57	805.7	0.042	0.38	11.91	154.9	278.6	712.8	5656.8	992.0	3588.6	3.5	3.5	6	40.0	39.0	2.4	2.6	24.7	5.6	5.6
10/25/1999	16:58	807	0.041	0.38	11.9	154.9	278.6	711.2	5721.1	991.5	3608.0	3.4	3.3	6	31.3	38.9	2.4	2.6	24.8	5.6	5.6
10/25/1999	16:59	808.1	0.041	0.38	11.9	154.9	278.6	709.6	5691.9	991.9	3600.3	3.5	3.5	6	37.5	38.9	2.4	2.6	24.8	5.6	5.6
10/25/1999	17:00	807	0.041	0.38	11.94	154.9	278.6	710.9	5710.2	991.6	3608.7	3.4	3.3	6	36.3	38.8	2.4	2.6	24.8	5.6	5.6
10/25/1999	17:01	807.8	0.041	0.37	12	154.9	278.6	710.5	5689.3	992.0	3604.2	3.4	3.4	6	28.8	38.7	2.4	2.5	24.8	5.6	5.6
10/25/1999	17:02	807	0.041	0.37	11.97	154.9	278.6	710.6	5704.3	992.5	3606.4	3.3	3.3	6	34.9	38.5	2.4	2.5	24.8	5.6	5.6
10/25/1999	17:03	806.9	0.041	0.37	11.96	154.9	278.6	710.7	5679.4	992.8	3606.1	3.4	3.4	6	32.7	38.4	2.4	2.5	24.8	5.6	5.6
10/25/1999	17:04	806.6	0.041	0.36	12.02	154.9	278.6	710.8	5701.0	992.9	3605.5	3.4	3.3	6	24.3	38.2	2.4	2.6	24.7	5.6	5.6
10/25/1999	17:05	806.5	0.041	0.36	12.02	154.9	278.6	710.6	5693.8	992.9	3600.9	3.4	3.3	6	39.4	38.1	2.4	2.5	24.6	5.6	5.6
10/25/1999	17:06	806.2	0.040	0.36	12.01	154.9	278.6	712.2	5692.3	992.8	3606.9	3.4	3.3	6	31.4	38.1	2.4	2.5	24.8	5.6	5.6
10/25/1999	17:07	807.3	0.040	0.36	12.03	154.9	278.6	710.0	5692.3	992.8	3605.5	3.4	3.3	6	27.5	38.0	2.4	2.5	24.6	5.6	5.6

Navajo Generating Station

Plant Operational Data during Mercury Testing

DATE	TIME	GROSS MW	SO2 lb/mmBTU	NOx lb/mmBTU	CO2 %	3PrHtInlet degF	3PrHtOutlet degF	Coal Flow [kpph]	Main Stm Flow [kpph]	Main Stm Temp [deg F]	Main Stm Press [psig]	Econ Out O2 'A' [%]	Econ Out O2 'B' [%]	Number of Mills	A Limestone Feed (kpph)	B Limestone Feed (kpph)	A DP ["H2O]	B DP ["H2O]	LS Feed Density [% Solids]	A pH	B pH
10/25/1999	17:08	808.2	0.041	0.36	12.01	154.9	278.6	710.9	5683.3	992.5	3605.5	3.5	3.4	6	26.6	37.9	2.4	2.6	24.7	5.6	5.6
10/25/1999	17:09	808.6	0.040	0.36	12.03	154.9	278.6	711.1	5671.7	992.3	3607.0	3.4	3.4	6	38.8	37.8	2.4	2.6	24.7	5.6	5.6
10/25/1999	17:10	809.1	0.040	0.37	12.02	154.9	278.6	711.9	5687.1	991.5	3607.2	3.5	3.4	6	34.9	37.8	2.4	2.6	24.7	5.6	5.6
10/25/1999	17:11	809.8	0.041	0.37	11.96	154.9	278.6	712.1	5681.5	991.2	3608.4	3.3	3.3	6	37.3	37.9	2.4	2.6	24.7	5.6	5.6
10/25/1999	17:12	810.6	0.041	0.37	11.95	154.9	278.6	712.3	5688.2	992.1	3614.3	3.4	3.2	6	45.1	37.9	2.4	2.6	24.8	5.6	5.6
10/25/1999	17:13	811.2	0.041	0.37	11.95	154.9	278.6	710.0	5656.8	994.0	3615.3	3.3	3.3	6	40.9	38.1	2.4	2.5	24.7	5.6	5.6
10/25/1999	17:14	811.5	0.042	0.37	11.99	154.9	278.6	707.1	5662.4	996.2	3615.3	3.3	3.2	6	42.7	38.0	2.4	2.5	24.6	5.6	5.6
10/25/1999	17:15	809.9	0.042	0.36	12.05	154.9	278.6	707.1	5664.1	998.0	3609.0	3.5	3.3	6	32.1	37.9	2.4	2.6	24.7	5.6	5.6
10/25/1999	17:16	808	0.042	0.36	12.07	154.9	278.6	706.1	5671.9	998.6	3600.9	3.4	3.3	6	34.9	37.9	2.4	2.6	24.7	5.6	5.6
10/25/1999	17:17	808.8	0.042	0.36	12.09	154.9	278.6	706.3	5686.9	998.2	3601.0	3.4	3.2	6	42.4	37.8	2.4	2.5	24.6	5.6	5.6
10/25/1999	17:18	808.2	0.042	0.37	12	154.9	278.6	705.6	5665.6	996.9	3594.6	3.4	3.3	6	60.2	37.7	2.4	2.5	24.6	5.6	5.6
10/25/1999	17:19	806.5	0.042	0.37	11.95	154.9	278.6	706.4	5677.3	995.2	3586.4	3.4	3.3	6	17.5	37.7	2.3	2.6	24.6	5.6	5.6
10/25/1999	17:20	805.7	0.042	0.37	11.97	154.9	278.6	710.7	5695.5	993.7	3594.7	3.4	3.4	6	20.5	37.7	2.4	2.6	24.6	5.6	5.6
10/25/1999	17:21	806.1	0.042	0.37	11.96	154.9	278.6	709.9	5661.3	992.3	3595.1	3.2	3.3	6	33.9	37.6	2.4	2.6	24.5	5.6	5.6
10/25/1999	17:22	806.9	0.041	0.37	11.92	154.9	278.6	710.3	5691.6	991.2	3603.9	3.1	3.2	6	26.4	37.5	2.4	2.6	24.5	5.6	5.6
10/25/1999	17:23	808.1	0.042	0.37	11.92	154.9	278.6	709.4	5673.2	992.0	3605.5	3.2	3.4	6	36.5	37.5	2.4	2.6	24.5	5.6	5.6
10/25/1999	17:24	807.9	0.042	0.36	11.98	154.9	278.6	708.8	5684.1	993.5	3600.1	3.4	3.4	6	26.2	37.5	2.4	2.6	24.5	5.6	5.6
10/25/1999	17:25	806.9	0.043	0.36	12.02	154.9	278.6	708.6	5660.1	993.7	3600.4	3.4	3.4	6	26.7	37.4	2.4	2.6	24.6	5.6	5.6
10/25/1999	17:26	807.2	0.042	0.36	11.98	154.9	278.6	708.9	5675.3	993.4	3602.4	3.6	3.4	6	34.6	37.4	2.4	2.6	24.4	5.6	5.6
10/25/1999	17:27	808	0.042	0.37	11.91	154.9	278.6	709.0	5688.6	992.8	3602.4	3.4	3.2	6	24.6	37.3	2.4	2.6	24.4	5.6	5.6
Run 1 Averages		**796.3**	**0.041**	**0.35**	**11.92**	**154.9**	**276.3**	**690.3**	**5598.1**	**991.9**	**3581.0**	**3.4**	**3.4**	**5.6**	**29.5**	**34.1**	**2.4**	**2.5**	**24.8**	**5.6**	**5.6**

Run 2

DATE	TIME	GROSS MW	SO2 lb/mmBTU	NOx lb/mmBTU	CO2 %	3PrHtInlet degF	3PrHtOutlet degF	Coal Flow [kpph]	Main Stm Flow [kpph]	Main Stm Temp [deg F]	Main Stm Press [psig]	Econ Out O2 'A' [%]	Econ Out O2 'B' [%]	Number of Mills	A Limestone Feed (kpph)	B Limestone Feed (kpph)	A DP ["H2O]	B DP ["H2O]	LS Feed Density [% Solids]	A pH	B pH
10/26/1999	7:55	807.1	0.044	0.38	11.95	154.9	267.3	695.0	5607.7	992.1	3587.2	3.2	3.4	6	39.4	35.1	2.3	2.4	25.8	5.6	5.6
10/26/1999	7:56	806.7	0.044	0.38	11.91	154.9	267.3	694.4	5609.6	992.1	3602.6	3.3	3.6	6	40.7	34.5	2.3	2.5	25.8	5.6	5.6
10/26/1999	7:57	807.6	0.045	0.37	12.01	154.9	267.3	694.5	5617.9	992.3	3600.2	3.5	3.5	6	40.3	34.1	2.3	2.5	25.9	5.6	5.6
10/26/1999	7:58	810.4	0.044	0.38	12	154.9	267.3	694.5	5605.9	992.4	3600.0	3.3	3.3	6	42.2	33.9	2.3	2.5	25.8	5.6	5.6
10/26/1999	7:59	809.7	0.044	0.38	11.94	154.9	267.3	693.1	5586.3	992.9	3611.7	3.3	3.2	6	37.2	33.7	2.3	2.4	25.7	5.6	5.6
10/26/1999	8:00	806.8	0.044	0.38	11.99	154.9	267.3	693.0	5625.3	994.0	3611.8	3.3	3.3	6	40.1	33.6	2.3	2.4	25.7	5.6	5.6
10/26/1999	8:01	805.9	0.045	0.37	12.12	154.9	267.3	689.8	5616.1	996.2	3595.3	3.3	3.4	6	34.0	33.3	2.3	2.4	25.7	5.6	5.6
10/26/1999	8:02	806.1	0.043	0.37	12.11	154.9	267.3	692.2	5607.9	997.6	3591.7	3.4	3.5	6	39.2	33.3	2.3	2.4	25.8	5.6	5.6
10/26/1999	8:03	805.8	0.044	0.38	11.99	154.9	267.3	691.9	5597.8	996.8	3593.8	3.4	3.4	6	41.8	33.2	2.3	2.4	25.8	5.6	5.6
10/26/1999	8:04	805.9	0.044	0.38	11.93	154.9	267.3	693.0	5619.8	994.6	3593.0	3.3	3.4	6	39.7	33.0	2.3	2.4	25.8	5.6	5.6
10/26/1999	8:05	806.8	0.044	0.38	11.95	154.9	267.3	694.3	5611.5	992.5	3589.0	3.4	3.3	6	38.6	33.0	2.3	2.4	25.7	5.6	5.6
10/26/1999	8:06	807.1	0.043	0.38	11.94	154.9	267.3	694.5	5616.1	991.5	3594.6	3.3	3.3	6	40.8	32.9	2.3	2.4	25.8	5.6	5.6
10/26/1999	8:07	807.2	0.044	0.38	11.98	154.9	267.3	695.1	5616.7	991.4	3598.9	3.2	3.3	6	42.7	32.8	2.3	2.4	25.8	5.6	5.6
10/26/1999	8:08	807.2	0.044	0.37	12.06	154.9	267.3	695.1	5602.9	992.4	3599.1	3.4	3.3	6	41.5	32.7	2.3	2.4	25.7	5.6	5.6
10/26/1999	8:09	807.3	0.043	0.37	12.06	154.9	267.3	695.1	5612.4	993.8	3599.1	3.5	3.5	6	37.9	32.6	2.3	2.5	25.7	5.6	5.6

Navajo Generating Station

Plant Operational Data during Mercury Testing

DATE	TIME	GROSS MW	SO2 lb/mmBTU	NOx lb/mmBTU	CO2 %	3PrHtInlet degF	3PrHtOutlt degF	Coal Flow [kpph]	Main Stm Flow [kpph]	Main Stm Temp [deg F]	Main Stm Press [psig]	Econ Out O2 'A' [%]	Econ Out O2 'B' [%]	Number of Mills	A Limestone Feed (kpph)	B Limestone Feed (kpph)	A DP ["H2O]	B DP ["H2O]	LS Feed Density [% Solids]	A pH	B pH
10/26/1999	8:10	807.5	0.045	0.37	12.04	154.9	267.3	694.3	5616.6	994.6	3601.5	3.5	3.5	6	38.1	32.6	2.3	2.5	25.8	5.6	5.6
10/26/1999	8:11	809.3	0.045	0.38	11.98	154.9	267.3	694.3	5599.3	994.7	3601.9	3.6	3.5	6	39.4	32.5	2.3	2.4	25.7	5.6	5.6
10/26/1999	8:12	808.1	0.044	0.38	11.93	154.9	267.3	694.1	5603.0	994.1	3607.9	3.4	3.3	6	40.8	32.4	2.3	2.4	25.8	5.6	5.6
10/26/1999	8:13	806.5	0.044	0.39	11.92	154.9	267.3	694.4	5611.8	993.7	3605.3	3.4	3.3	6	38.7	32.3	2.3	2.4	25.8	5.6	5.6
10/26/1999	8:14	805.9	0.044	0.38	12.01	154.9	267.3	694.5	5612.1	993.8	3595.9	3.4	3.3	6	40.5	32.3	2.3	2.4	25.8	5.6	5.6
10/26/1999	8:15	807.3	0.044	0.37	12.01	154.9	267.3	694.4	5607.6	994.8	3590.1	3.3	3.3	6	36.8	32.2	2.3	2.4	25.8	5.6	5.6
10/26/1999	8:16	809.1	0.043	0.37	12.03	154.9	267.3	693.5	5596.6	995.9	3599.8	3.3	3.3	6	38.3	31.9	2.3	2.4	25.8	5.6	5.6
10/26/1999	8:17	809.7	0.044	0.37	12.06	154.9	267.3	692.8	5602.5	996.5	3605.2	3.3	3.2	6	38.0	31.7	2.3	2.4	25.7	5.6	5.6
10/26/1999	8:18	807.6	0.044	0.37	12.11	154.9	267.3	690.5	5610.9	996.9	3608.5	3.4	3.4	6	38.5	31.7	2.3	2.4	25.8	5.6	5.6
10/26/1999	8:19	806.1	0.044	0.36	12.11	154.9	267.3	690.6	5609.4	996.9	3600.2	3.6	3.5	6	46.9	31.6	2.3	2.4	25.8	5.6	5.6
10/26/1999	8:20	805.9	0.044	0.37	12.06	154.9	267.3	692.4	5604.9	996.3	3592.4	3.6	3.6	6	23.9	31.6	2.3	2.4	25.7	5.6	5.6
10/26/1999	8:21	805.8	0.044	0.38	11.94	154.9	267.3	693.6	5611.8	994.1	3589.7	3.7	3.5	6	35.3	31.5	2.3	2.4	25.8	5.6	5.6
10/26/1999	8:22	805.6	0.044	0.39	11.85	154.9	267.3	697.4	5610.6	991.1	3587.3	3.5	3.4	6	34.5	31.5	2.3	2.4	25.8	5.6	5.6
10/26/1999	8:23	805.6	0.044	0.39	11.85	154.9	267.3	700.4	5623.4	989.0	3584.9	3.4	3.4	6	34.9	31.4	2.3	2.4	25.8	5.6	5.6
10/26/1999	8:24	806.7	0.044	0.38	11.9	154.9	267.3	702.0	5613.7	988.7	3581.2	3.3	3.5	6	32.7	31.4	2.3	2.4	25.7	5.6	5.6
10/26/1999	8:25	808.6	0.043	0.38	11.97	154.9	267.3	699.8	5598.7	989.9	3590.2	3.3	3.2	6	36.1	31.3	2.3	2.4	25.8	5.6	5.6
10/26/1999	8:26	809.9	0.044	0.37	12.02	154.9	267.3	699.5	5613.0	992.3	3602.9	3.3	3.3	6	37.0	31.3	2.3	2.4	25.8	5.6	5.6
10/26/1999	8:27	810.5	0.044	0.37	12.11	154.9	267.3	698.2	5611.2	994.4	3605.6	3.4	3.3	6	31.5	31.2	2.3	2.5	25.8	5.6	5.6
10/26/1999	8:28	809.3	0.044	0.37	12.12	154.9	267.3	694.9	5603.5	995.8	3613.8	3.4	3.3	6	33.2	31.2	2.3	2.4	25.8	5.6	5.6
10/26/1999	8:29	808.9	0.045	0.38	12.09	154.9	267.3	695.5	5599.7	996.2	3603.5	3.4	3.4	6	34.4	31.2	2.3	2.4	25.8	5.6	5.6
10/26/1999	8:30	808.7	0.045	0.38	12.06	154.9	267.3	696.6	5595.0	995.8	3600.3	3.5	3.5	6	37.5	31.2	2.3	2.4	25.8	5.6	5.6
10/26/1999	8:31	809.7	0.043	0.39	11.97	154.9	267.3	696.7	5585.8	995.1	3596.4	3.4	3.3	6	38.6	31.1	2.3	2.4	25.8	5.6	5.6
10/26/1999	8:32	808.6	0.043	0.39	11.96	154.9	267.3	695.5	5611.1	994.9	3601.3	3.3	3.3	6	38.5	31.1	2.3	2.4	25.8	5.6	5.6
10/26/1999	8:33	808.1	0.043	0.38	12.02	154.9	267.3	692.5	5595.8	995.7	3597.8	3.5	3.3	6	36.3	31.1	2.3	2.4	25.8	5.6	5.6
10/26/1999	8:34	809.3	0.043	0.37	12.11	154.9	267.3	692.3	5585.7	996.9	3593.3	3.3	3.2	6	37.5	31.0	2.3	2.4	25.8	5.6	5.6
10/26/1999	8:35	809.2	0.043	0.37	12.07	154.9	267.3	693.3	5612.9	998.0	3600.5	3.2	3.2	6	38.6	31.0	2.3	2.4	25.8	5.6	5.6
10/26/1999	8:36	806.7	0.043	0.37	12.09	154.9	267.7	690.0	5616.6	998.5	3604.1	3.4	3.3	6	38.4	30.9	2.3	2.4	25.7	5.6	5.6
10/26/1999	8:37	805.8	0.044	0.37	12.13	154.9	269.6	691.5	5622.5	998.0	3592.2	3.4	3.5	6	36.7	30.8	2.3	2.4	25.8	5.6	5.6
10/26/1999	8:38	805.7	0.043	0.37	12.09	154.9	269.6	694.8	5608.4	996.9	3591.7	3.7	3.5	6	37.7	30.9	2.3	2.4	25.7	5.6	5.6
10/26/1999	8:39	805.9	0.042	0.38	11.96	154.9	269.6	698.4	5637.2	994.2	3583.7	3.6	3.6	6	36.8	30.7	2.3	2.4	25.8	5.6	5.6
10/26/1999	8:40	805.9	0.042	0.39	11.9	154.9	269.6	698.2	5600.1	991.5	3589.3	3.6	3.6	6	39.1	30.7	2.4	2.4	25.7	5.6	5.6
10/26/1999	8:41	806.1	0.043	0.39	11.9	154.9	269.6	701.9	5624.8	989.3	3588.2	3.7	3.6	6	39.0	30.7	2.3	2.5	25.8	5.6	5.6
10/26/1999	8:42	806.6	0.043	0.39	11.9	154.9	269.6	701.6	5592.0	988.2	3591.4	3.6	3.4	6	38.2	30.7	2.3	2.5	25.8	5.6	5.6
10/26/1999	8:43	807.3	0.043	0.40	11.89	154.9	269.6	703.1	5586.6	988.0	3591.4	3.3	3.3	6	36.7	30.7	2.3	2.4	25.9	5.6	5.6
10/26/1999	8:44	807.7	0.043	0.39	11.94	154.9	269.6	702.9	5613.9	989.1	3597.8	3.3	3.2	6	38.0	30.6	2.3	2.4	25.9	5.6	5.6
10/26/1999	8:45	808.3	0.043	0.38	12.06	154.9	269.6	702.9	5607.7	991.3	3597.1	3.2	3.3	6	37.6	30.4	2.3	2.4	25.8	5.6	5.6
10/26/1999	8:46	808.6	0.043	0.37	12.12	154.9	269.6	702.3	5612.5	994.4	3600.0	3.2	3.2	6	38.1	30.4	2.3	2.4	25.8	5.6	5.6
10/26/1999	8:47	810.1	0.043	0.37	12.17	154.9	269.6	698.2	5632.4	997.2	3601.9	3.3	3.3	6	33.8	30.4	2.3	2.4	25.7	5.6	5.6
10/26/1999	8:48	810.6	0.043	0.37	12.18	154.9	269.6	697.3	5624.5	998.6	3605.4	3.3	3.3	6	38.4	30.4	2.3	2.4	25.8	5.6	5.6
10/26/1999	8:49	810.9	0.044	0.37	12.14	154.9	269.6	697.2	5611.0	998.5	3613.9	3.3	3.4	6	35.8	30.3	2.3	2.4	25.8	5.6	5.6
10/26/1999	8:50	812.2	0.043	0.38	12.11	154.9	269.6	698.4	5607.6	997.8	3608.1	3.4	3.3	6	32.5	30.1	2.3	2.5	25.8	5.6	5.6
10/26/1999	8:51	811.4	0.042	0.38	12.08	154.9	269.6	691.8	5587.3	997.6	3617.4	3.4	3.3	6	30.8	29.7	2.4	2.5	25.8	5.6	5.6
10/26/1999	8:52	810	0.042	0.38	12.07	154.9	269.6	691.2	5609.9	998.4	3614.5	3.6	3.4	6	27.6	29.6	2.3	2.5	25.8	5.6	5.6

Navajo Generating Station

Plant Operational Data during Mercury Testing

DATE	TIME	GROSS MW	SO2 lb/mmBTU	NOx lb/mmBTU	CO2 %	3PrHtInlet degF	3PrHtOutlet degF	Coal Flow [kpph]	Main Stm Flow [kpph]	Main Stm Temp [deg F]	Main Stm Press [psig]	Econ Out O2 'A' [%]	Econ Out O2 'B' [%]	Number of Mills	A Limestone Feed (kpph)	B Limestone Feed (kpph)	A DP ["H2O]	B DP ["H2O]	LS Feed Density [% Solids]	A pH	B pH
10/26/1999	8:53	809.5	0.042	0.38	12.1	154.9	269.6	693.5	5609.7	999.1	3604.3	3.5	3.4	6	23.4	35.2	2.3	2.5	25.8	5.6	5.6
10/26/1999	8:54	809.9	0.043	0.39	12	154.9	269.6	694.1	5592.5	998.6	3603.5	3.3	3.3	6	29.7	34.3	2.3	2.4	25.7	5.6	5.6
10/26/1999	8:55	809.6	0.042	0.39	11.94	154.9	269.6	693.8	5599.8	997.5	3607.5	3.3	3.3	6	31.6	33.5	2.3	2.5	25.7	5.6	5.6
10/26/1999	8:56	806.8	0.042	0.38	12.01	154.9	269.6	691.4	5603.4	997.1	3607.7	3.2	3.2	6	38.2	33.0	2.3	2.4	25.7	5.6	5.6
10/26/1999	8:57	805.7	0.043	0.37	12.12	154.9	269.6	690.7	5601.4	998.0	3600.8	3.4	3.4	6	37.0	32.6	2.3	2.5	25.8	5.6	5.6
10/26/1999	8:58	805.7	0.042	0.37	12.16	154.9	269.6	694.6	5582.0	998.6	3591.7	3.3	3.4	6	37.2	31.7	2.3	2.4	25.8	5.6	5.6
10/26/1999	8:59	805.6	0.042	0.38	12.06	154.9	269.6	694.7	5604.5	997.9	3595.9	3.4	3.4	6	36.0	30.8	2.3	2.5	25.8	5.6	5.6
10/26/1999	9:00	806	0.043	0.38	12.01	154.9	269.6	696.2	5607.9	995.7	3589.5	3.4	3.4	6	32.6	30.4	2.3	2.5	25.8	5.6	5.6
10/26/1999	9:01	805.8	0.043	0.38	11.99	154.9	269.6	696.7	5604.8	993.5	3594.4	3.5	3.6	6	34.3	30.3	2.3	2.5	25.8	5.6	5.6
10/26/1999	9:02	806.1	0.043	0.39	11.94	154.9	269.6	698.7	5604.9	991.4	3592.8	3.5	3.5	6	36.4	30.2	2.3	2.5	25.8	5.6	5.6
10/26/1999	9:03	807.5	0.043	0.38	11.94	154.9	269.6	699.3	5596.5	990.6	3591.8	3.5	3.3	6	27.2	30.2	2.3	2.5	25.8	5.6	5.6
10/26/1999	9:04	807.9	0.043	0.38	11.95	154.9	269.6	698.9	5596.2	991.4	3599.7	3.4	3.3	6	29.0	30.0	2.3	2.5	25.8	5.6	5.6
10/26/1999	9:05	807.9	0.043	0.38	12.01	154.9	271.8	698.8	5615.7	992.6	3603.1	3.4	3.2	6	34.0	30.0	2.3	2.5	25.7	5.6	5.6
10/26/1999	9:06	809.9	0.043	0.38	12.08	154.9	271.8	698.7	5599.2	994.1	3600.9	3.2	3.3	6	28.9	29.9	2.3	2.5	25.8	5.6	5.6
10/26/1999	9:07	809.1	0.042	0.37	12.1	154.9	271.8	697.5	5615.8	995.6	3606.9	3.3	3.2	6	28.8	29.8	2.3	2.5	25.8	5.6	5.6
10/26/1999	9:08	808.1	0.042	0.37	12.12	154.9	271.8	695.7	5589.9	997.0	3608.0	3.3	3.4	6	29.7	29.8	2.3	2.4	25.8	5.6	5.6
10/26/1999	9:09	807.7	0.043	0.37	12.18	154.9	271.8	695.0	5611.8	998.2	3599.3	3.5	3.4	6	37.6	29.7	2.3	2.5	25.8	5.6	5.6
10/26/1999	9:10	808.5	0.043	0.38	12.11	154.9	271.8	696.0	5588.4	998.2	3597.0	3.5	3.4	6	37.1	29.6	2.3	2.5	25.7	5.6	5.6
10/26/1999	9:11	808.9	0.042	0.39	12.03	154.9	271.8	696.1	5599.7	996.9	3598.9	3.4	3.3	6	34.3	29.5	2.3	2.5	25.8	5.6	5.6
10/26/1999	9:12	807.6	0.042	0.39	11.99	154.9	271.8	696.0	5600.2	995.0	3603.7	3.4	3.3	6	34.2	29.5	2.3	2.5	25.7	5.6	5.6
10/26/1999	9:13	808.8	0.043	0.39	12	154.9	271.8	696.9	5610.5	993.5	3594.7	3.4	3.4	6	36.7	29.4	2.3	2.5	25.8	5.6	5.6
10/26/1999	9:14	808.9	0.043	0.38	12	154.9	271.8	697.0	5596.4	993.3	3600.3	3.3	3.2	6	38.7	29.3	2.3	2.5	25.8	5.6	5.6
10/26/1999	9:15	809.5	0.042	0.38	12	154.9	271.8	696.9	5607.8	993.5	3604.0	3.2	3.3	6	34.4	29.3	2.3	2.5	25.8	5.6	5.6
10/26/1999	9:16	809.1	0.042	0.37	12.09	154.9	271.8	697.0	5620.0	994.4	3604.0	3.1	3.3	6	33.9	29.2	2.3	2.4	25.8	5.6	5.6
10/26/1999	9:17	807.9	0.042	0.37	12.15	154.9	271.8	694.9	5608.4	995.9	3604.9	3.2	3.3	6	35.8	29.1	2.3	2.5	25.7	5.6	5.6
10/26/1999	9:18	807.1	0.043	0.36	12.2	154.9	271.8	694.0	5619.2	997.7	3602.8	3.5	3.5	6	34.2	29.1	2.3	2.5	25.9	5.6	5.6
10/26/1999	9:19	807.8	0.043	0.37	12.16	154.9	271.8	695.2	5601.4	997.8	3598.3	3.5	3.5	6	54.4	29.0	2.4	2.5	25.8	5.6	5.6
10/26/1999	9:20	807.2	0.043	0.38	12.03	154.9	271.8	695.2	5608.6	996.4	3600.8	3.5	3.6	6	16.5	29.0	2.3	2.5	25.7	5.6	5.6
10/26/1999	9:21	806.3	0.044	0.39	11.93	154.9	271.8	695.8	5616.8	994.1	3598.9	3.5	3.5	6	34.2	29.0	2.3	2.5	25.8	5.6	5.6
10/26/1999	9:22	805.8	0.043	0.38	11.93	154.9	271.8	697.7	5596.3	991.7	3594.1	3.4	3.5	6	27.3	29.0	2.3	2.5	25.8	5.6	5.6
10/26/1999	9:23	807.7	0.041	0.39	11.89	154.9	271.8	700.6	5622.1	990.2	3590.2	3.4	3.5	6	31.2	29.0	2.3	2.5	25.7	5.6	5.6
10/26/1999	9:24	806.8	0.042	0.38	11.98	154.9	271.8	699.6	5588.0	990.4	3592.0	3.2	3.3	6	31.5	28.9	2.3	2.4	25.8	5.6	5.6
10/26/1999	9:25	806.5	0.042	0.38	12.04	154.9	271.8	699.4	5595.8	992.1	3598.2	3.4	3.4	6	30.9	28.8	2.4	2.5	25.8	5.6	5.6
10/26/1999	9:26	807	0.043	0.36	12.18	154.9	271.8	699.7	5578.1	994.2	3589.9	3.3	3.4	6	29.4	28.8	2.4	2.5	25.8	5.6	5.6
10/26/1999	9:27	809	0.043	0.37	12.13	154.9	271.8	699.3	5594.7	995.5	3597.8	3.2	3.4	6	26.7	28.8	2.4	2.5	25.8	5.6	5.6
10/26/1999	9:28	810.4	0.044	0.38	12.08	154.9	271.8	698.4	5586.0	995.7	3600.3	3.3	3.3	6	34.0	28.7	2.4	2.5	25.8	5.6	5.6
10/26/1999	9:29	810.2	0.044	0.39	12.08	154.9	271.8	696.9	5582.5	996.1	3610.1	3.3	3.4	6	24.7	28.7	2.4	2.5	25.7	5.6	5.6
10/26/1999	9:30	809.8	0.044	0.38	12.11	154.9	271.8	697.6	5576.0	997.2	3606.3	3.3	3.2	6	27.2	28.1	2.4	2.5	25.8	5.6	5.6
10/26/1999	9:31	809.6	0.043	0.38	12.1	154.9	271.8	696.3	5592.9	999.0	3606.3	3.4	3.3	6	23.3	27.9	2.4	2.5	25.8	5.6	5.6
10/26/1999	9:32	808.3	0.044	0.38	12.1	154.9	271.8	694.9	5575.9	1000.3	3606.6	3.5	3.3	6	28.1	27.8	2.4	2.5	25.8	5.6	5.6
10/26/1999	9:33	807.6	0.044	0.39	12.06	154.9	271.8	691.0	5583.9	1000.6	3602.9	3.4	3.4	6	38.5	27.8	2.4	2.5	25.8	5.6	5.6
10/26/1999	9:34	806.2	0.043	0.38	12.06	154.9	271.8	690.2	5580.3	999.7	3604.5	3.4	3.3	6	31.3	27.8	2.4	2.5	25.8	5.6	5.6
10/26/1999	9:35	806.1	0.043	0.38	12	154.9	271.8	690.2	5587.6	999.3	3597.1	3.3	3.3	6	37.8	27.7	2.4	2.4	25.8	5.6	5.6

Navajo Generating Station

Plant Operational Data during Mercury Testing

DATE	TIME	GROSS MW	SO2 lb/mmBTU	NOx lb/mmBTU	CO2 %	3PrHtInlet degF	3PrHtOutlet degF	Coal Flow [kpph]	Main Stm Flow [kpph]	Main Stm Temp [deg F]	Main Stm Press [psig]	Econ Out O2 'A' [%]	Econ Out O2 'B' [%]	Number of Mills	A Limestone Feed (kpph)	B Limestone Feed (kpph)	A DP ["H2O]	B DP ["H2O]	LS Feed Density [% Solids]	A pH	B pH
10/26/1999	9:36	805.9	0.043	0.38	12.04	154.9	271.8	689.7	5582.2	999.1	3596.1	3.4	3.3	6	29.7	27.7	2.3	2.4	25.7	5.6	5.6
10/26/1999	9:37	806.5	0.043	0.37	12.06	154.9	271.8	690.0	5598.1	999.1	3594.7	3.3	3.1	6	39.3	27.7	2.3	2.5	25.8	5.6	5.6
10/26/1999	9:38	806.5	0.042	0.37	12.08	154.9	271.8	688.2	5580.2	999.3	3599.9	3.2	3.2	6	35.4	27.6	2.4	2.5	25.7	5.6	5.6
10/26/1999	9:39	806.1	0.042	0.36	12.15	154.9	271.8	684.2	5578.9	999.9	3603.1	3.2	3.3	6	40.1	27.6	2.3	2.5	25.8	5.6	5.6
10/26/1999	9:40	805.2	0.043	0.36	12.15	154.9	271.8	682.6	5603.7	999.9	3604.7	3.3	3.4	6	39.9	27.6	2.3	2.5	25.7	5.6	5.6
10/26/1999	9:41	804.1	0.043	0.36	12.12	154.9	271.8	682.5	5579.5	999.2	3593.3	3.4	3.5	6	38.4	27.6	2.4	2.5	25.8	5.6	5.6
10/26/1999	9:42	803.2	0.043	0.37	12.06	154.9	271.8	691.1	5635.6	998.0	3581.7	3.5	3.7	6	38.7	27.6	2.3	2.5	25.8	5.6	5.6
10/26/1999	9:43	802.6	0.042	0.38	11.97	154.9	271.8	695.8	5679.4	996.4	3570.5	3.5	3.8	6	32.5	27.5	2.4	2.5	25.8	5.6	5.6
10/26/1999	9:44	804.8	0.043	0.38	11.88	154.9	271.8	699.9	5694.7	994.8	3571.7	3.8	3.7	6	36.2	27.5	2.4	2.5	25.8	5.6	5.6
10/26/1999	9:45	807.1	0.043	0.39	11.84	154.9	271.8	694.0	5634.5	992.5	3580.4	3.5	3.6	6	36.5	27.5	2.4	2.5	25.8	5.6	5.6
10/26/1999	9:46	807.9	0.043	0.40	11.78	154.9	271.8	693.6	5627.0	990.8	3594.0	3.4	3.5	6	33.9	27.4	2.4	2.5	25.8	5.6	5.6
10/26/1999	9:47	806.5	0.044	0.39	11.88	154.9	271.8	694.8	5654.2	989.3	3599.5	3.4	3.3	6	38.0	27.4	2.3	2.5	25.7	5.6	5.6
10/26/1999	9:48	805.7	0.044	0.38	11.95	154.9	271.8	696.6	5641.1	988.4	3592.6	3.2	3.5	6	40.0	27.4	2.3	2.4	25.8	5.6	5.6
10/26/1999	9:49	805.5	0.042	0.38	12.01	154.9	271.8	698.6	5657.8	988.9	3588.5	3.2	3.2	6	34.4	27.4	2.3	2.4	25.7	5.6	5.6
10/26/1999	9:50	806	0.042	0.37	12.06	154.9	271.8	696.9	5647.0	990.5	3588.2	3.3	3.3	6	32.0	27.3	2.4	2.4	25.7	5.6	5.6
10/26/1999	9:51	807.5	0.043	0.36	12.13	154.9	271.8	697.6	5647.0	992.5	3585.4	3.3	3.5	6	39.3	27.3	2.4	2.5	25.7	5.6	5.6
10/26/1999	9:52	810	0.042	0.36	12.14	154.9	271.8	695.8	5652.3	993.6	3594.6	3.4	3.6	6	31.7	27.3	2.4	2.5	25.7	5.6	5.6
10/26/1999	9:53	811.2	0.043	0.37	12.07	154.9	271.8	695.9	5645.7	993.3	3599.9	3.4	3.5	6	36.4	32.3	2.4	2.5	25.7	5.6	5.6
10/26/1999	9:54	811	0.043	0.38	11.97	154.9	271.8	695.5	5643.7	991.8	3610.2	3.4	3.4	6	30.8	31.3	2.4	2.5	25.6	5.6	5.6
10/26/1999	9:55	811.3	0.043	0.38	11.97	154.9	271.8	697.3	5667.8	990.3	3606.7	3.3	3.3	6	34.6	30.6	2.4	2.5	25.8	5.6	5.6
10/26/1999	9:56	810.3	0.043	0.38	12.04	154.9	271.8	695.0	5639.5	990.9	3611.2	3.3	3.3	6	36.0	30.2	2.3	2.5	25.7	5.6	5.6
10/26/1999	9:57	809.7	0.043	0.37	12.09	154.9	271.8	697.4	5649.3	993.1	3607.9	3.3	3.3	6	36.4	29.9	2.3	2.5	25.8	5.6	5.6
10/26/1999	9:58	809	0.043	0.37	12.19	154.9	271.8	697.2	5665.4	994.5	3597.6	3.3	3.4	6	37.2	29.7	2.4	2.5	25.8	5.6	5.6
10/26/1999	9:59	810.2	0.043	0.38	12.1	154.9	271.8	696.2	5647.2	994.8	3598.6	3.5	3.4	6	38.6	29.5	2.4	2.5	25.8	5.6	5.6
10/26/1999	10:00	810.6	0.043	0.38	12.09	154.9	271.8	696.3	5647.0	994.0	3600.7	3.4	3.4	6	34.4	29.3	2.4	2.5	25.8	5.6	5.6
10/26/1999	10:01	810.7	0.044	0.38	12.03	154.9	271.8	695.7	5644.2	993.3	3607.0	3.5	3.5	6	38.9	29.2	2.4	2.5	25.7	5.6	5.6
10/26/1999	10:02	811	0.044	0.38	12.06	154.9	271.8	696.7	5659.3	992.8	3602.3	3.4	3.5	6	41.3	29.1	2.4	2.5	25.8	5.6	5.6
10/26/1999	10:03	809.6	0.043	0.39	11.99	154.9	271.8	694.1	5628.0	992.3	3614.1	3.4	3.4	6	37.9	29.0	2.4	2.5	25.8	5.6	5.6
10/26/1999	10:04	808.3	0.043	0.38	12	154.9	271.8	698.6	5644.2	991.5	3604.8	3.4	3.4	6	37.7	28.9	2.4	2.5	25.8	5.6	5.6
10/26/1999	10:05	807.6	0.043	0.38	12.03	154.9	271.8	698.4	5646.5	990.9	3595.4	3.3	3.4	6	30.3	28.8	2.4	2.5	25.7	5.6	5.6
10/26/1999	10:06	809.1	0.043	0.38	12.01	154.9	271.8	698.3	5636.3	991.2	3597.9	3.3	3.4	6	36.3	28.8	2.4	2.5	25.8	5.6	5.6
10/26/1999	10:07	810.1	0.042	0.38	12.06	154.9	271.8	699.2	5645.3	992.0	3599.9	3.2	3.3	6	40.9	28.8	2.4	2.5	25.8	5.6	5.6
10/26/1999	10:08	810.3	0.042	0.37	12.09	154.9	271.8	699.1	5646.2	992.5	3606.4	3.3	3.5	6	31.2	28.6	2.4	2.5	25.7	5.6	5.6
10/26/1999	10:09	809.9	0.042	0.37	12.12	154.9	271.8	698.2	5647.2	993.4	3608.4	3.4	3.5	6	33.6	28.8	2.4	2.5	25.8	5.6	5.6
10/26/1999	10:10	809.7	0.044	0.37	12.08	154.9	271.8	698.8	5636.4	993.7	3603.1	3.4	3.5	6	33.5	28.8	2.4	2.5	25.7	5.6	5.6
10/26/1999	10:11	810.3	N/A	N/A	N/A	154.9	271.8	698.9	5647.7	993.1	3600.0	3.6	3.5	6	40.0	28.8	2.4	2.5	25.9	5.6	5.6
10/26/1999	10:12	810.1	N/A	N/A	N/A	154.9	271.8	699.5	5617.1	991.9	3602.9	3.4	3.4	6	29.6	28.8	2.4	2.5	25.8	5.6	5.6
10/26/1999	10:13	810.5	N/A	N/A	N/A	154.9	271.8	700.9	5649.9	990.9	3601.4	3.4	3.3	6	31.9	28.8	2.4	2.5	25.8	5.6	5.6
10/26/1999	10:14	810.4	N/A	N/A	N/A	154.9	271.8	701.2	5620.6	990.2	3607.8	3.3	3.3	6	29.4	28.7	2.3	2.5	25.9	5.6	5.6
10/26/1999	10:15	810.6	N/A	N/A	N/A	154.9	271.8	702.0	5619.5	991.0	3602.3	3.2	3.2	6	31.5	28.7	2.3	2.5	25.7	5.6	5.6
Run 2 Averages		**808.0**	**0.043**	**0.38**	**12.0**	**154.9**	**270.0**	**695.7**	**5613.7**	**994.4**	**3598.9**	**3.4**	**3.4**	**6.0**	**35.4**	**30.2**	**2.3**	**2.5**	**25.8**	**5.6**	**5.6**

Navajo Generating Station

Plant Operational Data during Mercury Testing

DATE	TIME	GROSS MW	SO2 lb/mmBTU	NOx lb/mmBTU	CO2 %	3PrHtInlet degF	3PrHtOutlet degF	Coal Flow [kpph]	Main Stm Flow [kpph]	Main Stm Temp [deg F]	Main Stm Press [psig]	Econ Out O2 'A' [%]	Econ Out O2 'B' [%]	Number of Mills	A Limestone Feed (kpph)	B Limestone Feed (kpph)	A DP ["H2O]	B DP ["H2O]	LS Feed Density [% Solids]	A pH	B pH
Run 3																					
		GROSS	SO2	NOx	CO2	3PrHtInlet	3PrHtOutlt	Coal Flo	ain Stm Fl	ain Stm Te	in Stm Pr	on Out O2	n Out O2	umber	Limesto	Limesto	A DP	B DP	S Feed Density		
DATE	TIME	MW	lb/mmBTU	lb/mmBTU	%	degF	degF	[kpph]	[kpph]	[deg F]	[psig]	[%]	[%]	Mills	eed (kpp	eed (kpp	["H2O]	["H2O]	[% Solids]	A pH	B pH
10/26/1999	11:30	805.5	0.043	0.374	11.96	154.9	274.1	695.7	5618.5	993.8	3599.3	3.60	3.46	6	31.7	33.0	2.4	2.5	25.8	5.6	5.6
10/26/1999	11:31	805.6	0.043	0.377	11.88	154.9	274.1	697.4	5640.6	992.0	3606.4	3.46	3.43	6	28.8	32.9	2.4	2.5	25.8	5.6	5.6
10/26/1999	11:32	805.2	0.041	0.376	11.89	154.9	274.1	698.2	5597.3	991.0	3596.8	3.45	3.45	6	29.4	32.8	2.4	2.5	25.7	5.6	5.6
10/26/1999	11:33	805.6	0.041	0.371	11.95	154.9	274.1	700.3	5637.2	990.1	3585.1	3.38	3.42	6	36.3	32.7	2.4	2.5	25.8	5.6	5.6
10/26/1999	11:34	806	0.041	0.364	12.06	154.9	274.1	703.3	5623.2	990.7	3595.1	3.29	3.38	6	40.4	32.6	2.4	2.5	25.8	5.6	5.6
10/26/1999	11:35	805.4	0.042	0.362	12.09	154.9	274.1	699.4	5629.4	992.3	3595.4	3.50	3.46	6	34.9	32.5	2.4	2.5	25.7	5.6	5.6
10/26/1999	11:36	806.6	0.043	0.366	12.06	154.9	274.1	700.5	5622.8	992.5	3592.5	3.47	3.46	6	39.8	32.4	2.4	2.5	25.8	5.6	5.6
10/26/1999	11:37	808.5	0.043	0.385	11.97	154.9	274.1	701.5	5605.3	991.9	3600.3	3.54	3.41	6	37.4	32.3	2.4	2.5	25.8	5.6	5.6
10/26/1999	11:38	809	0.043	0.391	11.89	154.9	274.1	702.3	5614.9	991.3	3605.1	3.40	3.41	6	39.1	32.3	2.4	2.5	25.8	5.6	5.6
10/26/1999	11:39	808.1	0.043	0.383	11.96	154.9	274.1	702.2	5607.1	991.4	3601.7	3.38	3.36	6	29.8	32.2	2.4	2.6	25.8	5.6	5.6
10/26/1999	11:40	807.9	0.043	0.373	12.06	154.9	274.1	702.2	5614.4	991.9	3598.6	3.46	3.36	6	21.8	32.1	2.4	2.5	25.8	5.6	5.6
10/26/1999	11:41	808	0.042	0.370	12.06	154.9	274.1	702.5	5605.7	992.8	3602.9	3.37	3.19	6	31.4	32.0	2.4	2.5	25.7	5.6	5.6
10/26/1999	11:42	809.8	0.042	0.373	12.04	154.9	274.1	701.9	5609.4	994.0	3608.2	3.30	3.10	6	32.2	31.9	2.4	2.5	25.8	5.6	5.6
10/26/1999	11:43	810.4	0.042	0.374	12.03	154.9	274.1	701.5	5608.7	995.5	3609.9	3.18	3.23	6	29.2	31.9	2.4	2.5	25.7	5.6	5.6
10/26/1999	11:44	808.9	0.043	0.368	12.05	154.9	274.1	699.4	5583.6	997.5	3618.8	3.28	3.13	6	39.6	32.6	2.4	2.5	25.8	5.6	5.6
10/26/1999	11:45	806.8	0.043	0.368	12.06	154.9	274.1	695.1	5596.0	999.5	3603.8	3.45	3.16	6	39.0	32.5	2.4	2.5	25.8	5.6	5.6
10/26/1999	11:46	806	0.043	0.358	12.01	154.9	274.1	698.5	5608.0	999.6	3604.8	3.40	3.17	6	34.5	32.6	2.4	2.5	25.8	5.6	5.6
10/26/1999	11:47	806	0.042	0.362	11.85	154.9	274.1	696.7	5609.7	1000.3	3602.4	3.48	3.38	6	34.3	33.5	2.4	2.5	25.8	5.6	5.6
10/26/1999	11:48	805.5	0.042	0.361	11.84	154.9	274.1	696.1	5601.5	1000.8	3600.6	3.64	3.30	6	40.0	33.5	2.4	2.5	25.8	5.6	5.6
10/26/1999	11:49	805.4	0.043	0.357	11.91	154.9	274.1	695.4	5608.2	1000.9	3602.3	3.65	3.47	6	20.4	33.4	2.4	2.5	25.8	5.6	5.6
10/26/1999	11:50	808.1	0.043	0.351	12	154.9	274.1	694.5	5587.0	1000.5	3605.6	3.49	3.31	6	27.7	33.3	2.4	2.5	25.7	5.6	5.6
10/26/1999	11:51	808.3	0.042	0.352	11.98	154.9	274.1	693.8	5584.0	999.1	3603.4	3.52	3.23	6	33.6	33.3	2.4	2.5	25.7	5.6	5.6
10/26/1999	11:52	808.2	0.043	0.345	12.01	154.9	274.1	693.1	5621.2	998.0	3606.1	3.34	3.23	6	18.4	33.2	2.3	2.5	25.7	5.6	5.6
10/26/1999	11:53	810.3	0.043	0.343	12.07	154.9	274.1	691.4	5617.3	998.4	3600.8	3.26	3.25	6	31.3	33.1	2.3	2.5	25.7	5.6	5.6
10/26/1999	11:54	810.2	0.043	0.352	12.01	154.9	274.1	689.5	5616.9	999.6	3593.8	3.39	3.34	6	21.0	33.1	2.3	2.5	25.8	5.6	5.6
10/26/1999	11:55	809.8	0.044	0.356	11.98	154.9	274.1	690.2	5621.3	1000.0	3585.4	3.36	3.29	6	19.3	33.1	2.4	2.5	25.8	5.6	5.6
10/26/1999	11:56	809.7	0.044	0.357	12.02	154.9	274.1	693.5	5632.5	999.0	3581.5	3.31	3.47	6	31.9	33.0	2.4	2.5	25.8	5.6	5.6
10/26/1999	11:57	807.1	0.042	0.360	11.97	154.9	274.1	695.3	5640.0	997.6	3587.9	3.44	3.48	6	32.0	33.0	2.4	2.5	25.8	5.6	5.6
10/26/1999	11:58	806.7	0.042	0.358	11.97	154.9	274.1	691.6	5660.7	996.4	3584.0	3.61	3.52	6	27.2	32.9	2.4	2.5	25.8	5.6	5.6
10/26/1999	11:59	808.6	0.042	0.355	11.97	154.9	274.1	692.8	5629.0	994.5	3588.7	3.55	3.49	6	32.8	33.0	2.4	2.5	25.8	5.6	5.6
10/26/1999	12:00	809.1	0.042	0.357	11.92	154.9	274.1	693.8	5640.7	992.7	3588.5	3.35	3.27	6	32.6	33.0	2.4	2.5	25.8	5.6	5.6
10/26/1999	12:01	808.1	0.043	0.349	11.95	154.9	274.1	696.3	5636.6	990.5	3590.8	3.35	3.29	6	30.4	33.0	2.3	2.5	25.8	5.6	5.6
10/26/1999	12:02	807.2	0.043	0.346	12.05	154.9	274.1	696.4	5656.8	990.4	3584.4	3.30	3.40	6	33.0	33.0	2.3	2.5	25.8	5.6	5.6
10/26/1999	12:03	805.7	0.042	0.350	12.03	154.9	274.1	698.3	5632.8	991.6	3590.5	3.28	3.47	6	30.8	32.9	2.4	2.5	25.8	5.6	5.6
10/26/1999	12:04	804.4	0.042	0.354	11.94	154.9	274.1	695.3	5661.8	993.1	3589.2	3.54	3.58	6	32.0	32.9	2.4	2.5	25.8	5.6	5.6
10/26/1999	12:05	803.9	0.041	0.358	11.87	154.9	274.1	697.7	5662.4	993.5	3587.7	3.43	3.51	6	33.7	32.9	2.4	2.5	25.8	5.6	5.6
10/26/1999	12:06	804.6	0.041	0.361	11.78	154.9	274.1	696.9	5656.7	992.1	3596.2	3.49	3.43	6	33.7	32.8	2.4	2.5	25.8	5.6	5.6
10/26/1999	12:07	803.9	0.042	0.359	11.79	154.9	274.1	698.1	5633.4	990.3	3597.5	3.35	3.21	6	24.9	32.7	2.4	2.5	25.7	5.6	5.6
10/26/1999	12:08	806.5	0.043	0.358	11.85	154.9	274.1	699.3	5667.9	989.6	3595.2	3.36	3.32	6	34.4	32.7	2.3	2.5	25.8	5.6	5.6

Navajo Generating Station

Plant Operational Data during Mercury Testing

DATE	TIME	GROSS MW	SO2 lb/mmBTU	NOx lb/mmBTU	CO2 %	3PrHtInlet degF	3PrHtOutlet degF	Coal Flow [kpph]	Main Stm Flow [kpph]	Main Stm Temp [deg F]	Main Stm Press [psig]	Econ Out O2 'A' [%]	Econ Out O2 'B' [%]	Number of Mills	A Limestone Feed (kpph)	B Limestone Feed (kpph)	A DP ["H2O]	B DP ["H2O]	LS Feed Density [% Solids]	A pH	B pH
10/26/1999	12:09	809.6	0.042	0.364	11.88	154.9	274.1	699.9	5650.3	989.9	3590.9	3.28	3.35	6	34.9	32.7	2.4	2.5	25.8	5.6	5.6
10/26/1999	12:10	810.8	0.042	0.371	11.82	154.9	274.1	700.0	5662.4	990.6	3589.9	3.38	3.25	6	35.9	32.6	2.4	2.5	25.8	5.6	5.6
10/26/1999	12:11	811.1	0.042	0.363	11.94	154.9	274.1	700.5	5658.3	991.1	3598.7	3.32	3.29	6	36.8	32.6	2.4	2.5	25.8	5.6	5.6
10/26/1999	12:12	810.7	0.043	0.353	12.06	154.9	274.1	700.8	5660.5	991.4	3602.6	3.34	3.36	6	35.7	32.5	2.4	2.5	25.7	5.6	5.6
10/26/1999	12:13	810.8	0.043	0.347	12.07	154.9	274.1	700.5	5647.5	991.4	3606.2	3.53	3.37	6	37.8	32.5	2.4	2.5	25.8	5.6	5.6
10/26/1999	12:14	810.9	0.043	0.349	12.05	154.9	274.1	700.6	5637.2	991.9	3598.0	3.47	3.50	6	38.7	32.4	2.4	2.6	25.7	5.6	5.6
10/26/1999	12:15	811.1	0.043	0.351	12.04	154.9	274.1	701.8	5651.4	991.0	3593.0	3.41	3.56	6	37.4	32.4	2.4	2.6	25.8	5.6	5.6
10/26/1999	12:16	810.6	0.043	0.354	11.99	154.9	274.1	703.8	5656.7	988.9	3595.5	3.27	3.37	6	39.6	32.5	2.4	2.6	25.8	5.6	5.6
10/26/1999	12:17	809.6	0.044	0.355	11.99	154.9	274.1	705.7	5656.1	988.2	3596.8	3.21	3.30	6	35.6	32.4	2.4	2.5	25.8	5.6	5.6
10/26/1999	12:18	810.1	0.042	0.356	11.97	154.9	274.1	705.5	5650.8	989.5	3591.5	3.19	3.43	6	19.5	31.6	2.4	2.5	25.8	5.6	5.6
10/26/1999	12:19	811.1	0.042	0.362	11.9	154.9	274.1	707.3	5652.0	991.7	3599.2	3.14	3.41	6	31.4	31.3	2.4	2.5	25.8	5.6	5.6
10/26/1999	12:20	811	0.042	0.364	11.86	154.9	274.1	703.0	5666.9	993.8	3610.3	3.15	3.33	6	36.1	31.2	2.4	2.5	25.8	5.6	5.6
10/26/1999	12:21	810.2	0.043	0.357	11.92	154.9	274.1	701.9	5653.8	995.2	3603.7	3.24	3.50	6	25.9	31.3	2.4	2.6	25.9	5.6	5.6
10/26/1999	12:22	809.6	0.043	0.352	12.02	154.9	274.1	700.7	5646.0	995.7	3607.5	3.13	3.39	6	24.4	36.7	2.4	2.6	25.7	5.6	5.6
10/26/1999	12:23	808	0.043	0.356	12	154.9	274.1	699.3	5633.9	996.0	3611.6	3.21	3.38	6	34.8	35.6	2.4	2.6	25.8	5.6	5.6
10/26/1999	12:24	808.2	0.042	0.358	11.97	154.9	274.1	697.9	5645.7	996.2	3604.2	3.25	3.48	6	42.8	34.7	2.4	2.5	25.7	5.6	5.6
10/26/1999	12:25	809.8	0.042	0.357	11.98	154.9	274.1	697.1	5630.0	996.3	3601.2	3.30	3.45	6	37.8	34.1	2.4	2.6	25.8	5.6	5.6
10/26/1999	12:26	809.4	0.043	0.361	11.93	154.9	274.1	696.2	5654.7	996.6	3599.1	3.30	3.41	6	30.8	33.6	2.4	2.5	25.8	5.6	5.6
10/26/1999	12:27	810	0.043	0.359	11.97	154.9	274.1	694.8	5648.6	996.3	3587.7	3.30	3.39	6	29.0	33.3	2.4	2.5	25.8	5.6	5.6
10/26/1999	12:28	810.4	0.043	0.357	12.02	154.9	274.1	696.8	5636.8	995.6	3595.3	3.28	3.34	6	32.6	33.0	2.4	2.5	25.8	5.6	5.6
10/26/1999	12:29	809.1	0.044	0.356	11.99	154.9	274.1	694.9	5658.9	995.1	3605.3	3.25	3.13	6	31.4	32.9	2.4	2.5	25.8	5.6	5.6
10/26/1999	12:30	808.7	0.043	0.355	12.02	154.9	274.1	694.9	5681.9	994.9	3599.3	3.22	3.45	6	28.8	32.8	2.4	2.6	25.8	5.6	5.6
10/26/1999	12:31	808.9	0.043	0.359	11.95	154.9	274.1	694.0	5658.7	995.1	3598.8	3.22	3.40	6	28.9	32.6	2.4	2.5	25.8	5.6	5.6
10/26/1999	12:32	807.1	0.043	0.365	11.88	154.9	274.1	693.2	5669.6	995.4	3594.3	3.41	3.67	6	34.6	32.4	2.5	2.6	25.7	5.6	5.6
10/26/1999	12:33	806.7	0.044	0.366	11.85	154.9	274.1	693.0	5666.7	994.8	3586.9	3.39	3.74	6	36.2	31.6	2.4	2.6	25.7	5.6	5.6
10/26/1999	12:34	807.8	0.044	0.369	11.85	154.9	274.1	698.6	5705.7	992.1	3583.7	3.28	3.67	6	33.2	30.9	2.4	2.5	25.8	5.6	5.6
10/26/1999	12:35	809.4	0.043	0.370	11.81	154.9	274.1	703.6	5716.0	988.6	3582.5	3.22	3.54	6	26.6	30.7	2.4	2.6	25.8	5.6	5.6
10/26/1999	12:36	810.2	0.043	0.367	11.83	154.9	274.1	706.0	5690.0	986.4	3587.7	3.39	3.62	6	39.0	30.6	2.5	2.6	25.7	5.6	5.6
10/26/1999	12:37	809.2	0.043	0.359	11.9	154.9	274.1	708.1	5710.3	985.7	3587.7	3.40	3.62	6	39.0	30.6	2.5	2.6	25.8	5.6	5.6
10/26/1999	12:38	810	0.044	0.353	11.98	154.9	274.1	707.8	5674.0	984.7	3603.3	3.23	3.55	6	34.5	30.5	2.5	2.6	25.7	5.6	5.6
10/26/1999	12:39	810.2	0.044	0.355	12	154.9	274.1	707.7	5677.7	983.9	3611.6	3.07	3.41	6	34.5	30.5	2.4	2.6	25.8	5.6	5.6
10/26/1999	12:40	810.1	0.044	0.363	11.92	154.9	274.1	708.0	5661.3	985.0	3613.2	3.13	3.33	6	33.7	30.4	2.4	2.6	25.7	5.6	5.6
10/26/1999	12:41	810.4	0.045	0.367	11.91	154.9	274.1	705.8	5677.8	987.2	3609.8	3.15	3.32	6	34.7	30.4	2.4	2.6	25.8	5.6	5.6
10/26/1999	12:42	810.6	0.044	0.368	11.9	154.9	274.1	707.1	5662.5	989.9	3606.8	3.21	3.46	6	32.7	30.3	2.4	2.6	25.8	5.6	5.6
10/26/1999	12:43	811	0.045	0.366	11.88	154.9	274.1	705.8	5680.4	992.6	3608.0	3.26	3.38	6	30.3	30.2	2.4	2.5	25.8	5.6	5.6
10/26/1999	12:44	810.1	0.043	0.361	11.96	154.9	274.1	703.6	5637.3	994.6	3607.3	3.29	3.29	6	26.8	30.1	2.4	2.5	25.8	5.6	5.6
10/26/1999	12:45	809	0.044	0.361	12	154.9	274.1	702.9	5665.6	995.3	3608.1	3.29	3.43	6	33.5	30.0	2.5	2.6	25.7	5.6	5.6
10/26/1999	12:46	809.9	0.044	0.362	12.02	154.9	274.1	702.9	5655.5	995.3	3600.5	3.37	3.59	6	38.4	30.0	2.4	2.6	25.8	5.6	5.6
10/26/1999	12:47	810.6	0.043	0.369	11.96	154.9	274.1	704.0	5654.4	995.1	3596.4	3.42	3.51	6	37.6	30.0	2.4	2.6	25.7	5.6	5.6
10/26/1999	12:48	810.5	0.044	0.372	11.87	154.9	274.1	704.6	5645.2	994.1	3603.1	3.30	3.48	6	41.0	30.0	2.4	2.6	25.8	5.6	5.6
10/26/1999	12:49	810.3	0.044	0.365	11.94	154.9	274.1	703.9	5644.5	993.0	3612.8	3.15	3.55	6	22.8	30.0	2.4	2.6	25.7	5.6	5.6
10/26/1999	12:50	810.3	0.043	0.361	11.98	154.9	274.5	702.2	5650.4	992.8	3610.1	3.27	3.48	6	19.5	30.0	2.5	2.6	25.8	5.6	5.6
10/26/1999	12:51	810.3	0.043	0.357	11.96	154.9	276.3	703.5	5652.9	993.5	3602.3	3.25	3.50	6	35.3	30.0	2.4	2.6	25.7	5.6	5.6

Navajo Generating Station

Plant Operational Data during Mercury Testing

DATE	TIME	GROSS MW	SO2 lb/mmBTU	NOx lb/mmBTU	CO2 %	3PrHtInlet degF	3PrHtOutlet degF	Coal Flow [kpph]	Main Stm Flow [kpph]	Main Stm Temp [deg F]	Main Stm Press [psig]	Econ Out O2 'A' [%]	Econ Out O2 'B' [%]	Number of Mills	A Limestone Feed (kpph)	B Limestone Feed (kpph)	A DP ["H2O]	B DP ["H2O]	LS Feed Density [% Solids]	A pH	B pH
10/26/1999	12:52	809.6	0.043	0.353	11.99	154.9	276.3	703.0	5649.8	994.7	3600.8	3.10	3.35	6	20.8	29.9	2.4	2.5	25.7	5.6	5.6
10/26/1999	12:53	808.9	0.044	0.355	11.99	154.9	276.3	701.6	5666.0	994.9	3596.9	3.33	3.45	6	27.1	29.9	2.4	2.5	25.7	5.6	5.6
10/26/1999	12:54	810	0.044	0.358	11.97	154.9	276.3	701.8	5663.6	994.7	3602.2	3.07	3.43	6	20.1	29.8	2.4	2.6	25.8	5.6	5.6
10/26/1999	12:55	809.6	0.043	0.365	11.87	154.9	276.3	701.9	5668.2	994.5	3606.1	3.17	3.39	6	20.7	29.8	2.4	2.5	25.8	5.6	5.6
10/26/1999	12:56	810.2	0.043	0.365	11.82	154.9	276.3	702.1	5658.3	994.0	3602.7	3.09	3.38	6	32.0	29.8	2.4	2.5	25.8	5.6	5.6
10/26/1999	12:57	809.2	0.044	0.363	11.89	154.9	276.3	702.2	5658.0	994.0	3606.2	3.17	3.39	6	28.1	29.8	2.4	2.6	25.9	5.6	5.6
10/26/1999	12:58	809.3	0.044	0.363	11.88	154.9	276.3	700.6	5642.6	994.6	3603.9	3.17	3.50	6	36.8	29.7	2.4	2.6	25.8	5.6	5.6
10/26/1999	12:59	809	0.043	0.357	11.95	154.9	276.3	701.1	5661.6	994.8	3596.4	3.44	3.46	6	35.5	29.7	2.4	2.6	25.7	5.6	5.6
10/26/1999	13:00	810.3	0.045	0.359	11.95	154.9	276.3	700.7	5660.9	994.1	3601.1	3.37	3.48	6	31.7	29.7	2.4	2.6	25.8	5.6	5.6
10/26/1999	13:01	810.2	0.044	0.362	11.98	154.9	276.3	700.7	5656.4	992.9	3594.5	3.46	3.54	6	40.3	29.7	2.4	2.6	25.7	5.6	5.6
10/26/1999	13:02	810	0.044	0.362	11.95	154.9	276.3	701.7	5659.3	991.4	3588.3	3.36	3.55	6	36.0	29.6	2.4	2.6	25.7	5.6	5.6
10/26/1999	13:03	809.6	0.044	0.361	11.99	154.9	276.3	704.3	5690.5	990.4	3593.3	3.49	3.53	6	44.2	29.6	2.4	2.5	25.8	5.6	5.6
10/26/1999	13:04	808.7	0.044	0.368	11.95	154.9	276.3	704.3	5678.2	989.9	3599.9	3.20	3.45	6	36.3	29.5	2.4	2.6	25.8	5.6	5.6
10/26/1999	13:05	808.4	0.044	0.374	11.91	154.9	276.3	705.5	5681.6	989.4	3608.4	3.22	3.44	6	40.0	29.5	2.4	2.5	25.8	5.6	5.6
10/26/1999	13:06	807.6	0.045	0.372	11.93	154.9	276.3	705.7	5676.8	989.7	3607.3	3.25	3.47	6	33.0	29.5	2.4	2.5	25.8	5.6	5.6
10/26/1999	13:07	805.9	0.045	0.368	11.94	154.9	276.3	706.5	5663.0	990.6	3605.1	3.28	3.61	6	38.5	29.4	2.4	2.6	25.8	5.6	5.6
10/26/1999	13:08	805.3	0.045	0.365	11.94	154.9	277.8	705.6	5661.4	991.9	3609.1	3.28	3.55	6	35.8	29.4	2.4	2.6	25.8	5.6	5.6
10/26/1999	13:09	803.8	0.044	0.366	11.9	154.9	278.6	704.5	5667.4	992.5	3608.0	3.36	3.45	6	30.8	29.1	2.5	2.6	25.8	5.6	5.6
10/26/1999	13:10	801.2	0.045	0.367	11.84	154.9	278.6	705.6	5665.4	991.9	3608.3	3.36	3.59	6	33.9	29.1	2.5	2.6	25.7	5.6	5.6
10/26/1999	13:11	803.4	0.044	0.366	11.8	154.9	278.6	705.8	5667.2	991.0	3606.7	3.34	3.53	6	33.2	29.0	2.4	2.6	25.8	5.6	5.6
10/26/1999	13:12	803.6	0.043	0.365	11.77	154.9	278.6	706.2	5663.9	991.2	3610.1	3.25	3.38	6	29.4	29.1	2.4	2.6	25.7	5.6	5.6
10/26/1999	13:13	806.1	0.043	0.353	11.78	154.9	278.6	705.0	5633.3	992.8	3613.3	3.14	3.36	6	34.4	28.9	2.4	2.6	25.8	5.6	5.6
10/26/1999	13:14	807.6	0.044	0.347	11.91	154.9	278.6	702.3	5651.0	994.9	3599.5	3.33	3.56	6	26.4	28.9	2.4	2.6	25.8	5.6	5.6
10/26/1999	13:15	804.8	0.044	0.349	11.92	154.9	278.6	703.8	5666.5	996.2	3598.2	3.25	3.63	6	38.0	28.8	2.4	2.5	25.8	5.6	5.6
10/26/1999	13:16	804.2	0.043	0.351	11.89	154.9	278.6	702.5	5645.7	996.3	3606.2	3.26	3.43	6	36.5	28.8	2.4	2.5	25.8	5.6	5.6
10/26/1999	13:17	806	0.043	0.357	11.86	154.9	278.6	702.4	5663.8	994.7	3610.6	3.24	3.52	6	42.3	28.8	2.4	2.5	25.8	5.6	5.6
10/26/1999	13:18	807.3	0.043	0.360	11.82	154.9	278.6	702.4	5655.2	993.4	3608.5	3.21	3.33	6	37.1	28.7	2.4	2.5	25.8	5.6	5.6
10/26/1999	13:19	806.6	0.043	0.351	11.91	154.9	278.6	702.8	5658.7	992.9	3606.3	3.16	3.34	6	31.1	28.7	2.4	2.5	25.8	5.6	5.6
10/26/1999	13:20	806.7	0.044	0.337	12.07	154.9	278.6	702.9	5676.9	993.2	3606.7	3.24	3.37	6	41.8	28.7	2.4	2.6	25.8	5.6	5.6
10/26/1999	13:21	806.2	0.044	0.341	12.05	154.9	278.6	702.1	5654.9	994.5	3608.0	3.28	3.48	6	36.5	29.1	2.4	2.6	25.7	5.6	5.6
10/26/1999	13:22	805.3	0.044	0.352	11.9	154.9	278.6	701.3	5662.6	995.5	3601.6	3.40	3.66	6	39.4	33.8	2.5	2.6	25.8	5.6	5.6
10/26/1999	13:23	804.9	0.043	0.356	11.82	154.9	278.6	701.0	5645.3	995.4	3605.0	3.37	3.50	6	32.7	32.7	2.5	2.6	25.8	5.6	5.6
10/26/1999	13:24	806	0.044	0.360	11.79	154.9	278.6	701.2	5655.9	994.0	3607.2	3.36	3.47	6	39.8	31.8	2.4	2.6	25.7	5.6	5.6
10/26/1999	13:25	806.2	0.044	0.356	11.83	154.9	278.6	703.1	5657.3	992.3	3604.1	3.32	3.41	6	36.6	31.3	2.4	2.6	25.8	5.6	5.6
10/26/1999	13:26	805.8	0.043	0.351	11.88	154.9	278.6	703.9	5645.2	991.3	3606.6	3.32	3.35	6	37.9	30.9	2.4	2.5	25.7	5.6	5.6
10/26/1999	13:27	806.7	0.044	0.353	11.93	154.9	278.6	704.0	5649.0	991.4	3601.9	3.25	3.36	6	40.5	30.6	2.4	2.5	25.8	5.6	5.6
10/26/1999	13:28	808.1	0.044	0.368	11.79	154.9	278.6	703.8	5653.1	991.8	3601.7	3.31	3.42	6	37.6	30.5	2.4	2.5	25.8	5.6	5.6
10/26/1999	13:29	808.4	0.044	0.371	11.74	154.9	278.6	703.9	5653.0	993.3	3602.7	3.34	3.42	6	39.0	30.3	2.4	2.6	25.8	5.6	5.6
10/26/1999	13:30	809	0.045	0.364	11.81	154.9	278.6	703.9	5673.9	994.1	3610.9	3.20	3.29	6	32.9	30.2	2.4	2.6	25.8	5.6	5.6
10/26/1999	13:31	810.2	0.045	0.352	11.96	154.9	278.6	702.9	5670.6	994.5	3607.7	3.51	3.29	6	30.4	30.1	2.4	2.5	25.8	5.6	5.6
10/26/1999	13:32	809.5	0.044	0.346	12.02	154.9	278.6	702.7	5643.4	994.6	3602.9	3.44	3.38	6	27.5	29.9	2.4	2.6	25.8	5.6	5.6
10/26/1999	13:33	807.8	0.045	0.340	12.05	154.9	278.6	703.1	5603.2	994.9	3601.4	3.29	3.33	6	39.9	29.9	2.4	2.6	25.7	5.6	5.6
10/26/1999	13:34	805.9	0.045	0.350	11.99	154.9	278.6	702.2	5605.1	995.0	3595.7	3.22	3.36	6	39.8	29.8	2.4	2.6	25.8	5.6	5.6

Navajo Generating Station

Plant Operational Data during Mercury Testing

DATE	TIME	GROSS MW	SO2 lb/mmBTU	NOx lb/mmBTU	CO2 %	3PrHtInlet degF	3PrHtOutlet degF	Coal Flow [kpph]	Main Stm Flow [kpph]	Main Stm Temp [deg F]	Main Stm Press [psig]	Econ Out O2 'A' [%]	Econ Out O2 'B' [%]	Number of Mills	A Limestone Feed (kpph)	B Limestone Feed (kpph)	A DP ["H2O]	B DP ["H2O]	LS Feed Density [% Solids]	A pH	B pH
10/26/1999	13:35	806	0.046	0.359	11.87	154.9	278.6	703.3	5621.9	994.6	3599.2	3.32	3.33	6	41.8	29.7	2.4	2.6	25.7	5.6	5.6
10/26/1999	13:36	804.4	0.045	0.369	11.73	154.9	278.6	703.2	5621.6	995.0	3594.4	3.36	3.42	6	41.5	29.6	2.4	2.6	25.8	5.6	5.6
10/26/1999	13:37	805.3	0.045	0.369	11.71	154.9	278.6	702.4	5637.4	995.9	3589.2	3.42	3.56	6	39.3	29.6	2.4	2.6	25.8	5.6	5.6
10/26/1999	13:38	807	0.045	0.360	11.79	154.9	278.6	698.9	5626.7	997.2	3594.1	3.41	3.48	6	39.0	29.5	2.4	2.6	25.8	5.6	5.6
10/26/1999	13:39	807.6	0.046	0.351	11.88	154.9	278.6	695.8	5694.3	997.5	3579.5	3.43	3.59	6	40.8	29.4	2.4	2.5	25.7	5.6	5.6
10/26/1999	13:40	809.5	0.047	0.351	11.91	154.9	278.6	706.7	5682.5	996.3	3582.6	3.36	3.50	6	35.8	29.4	2.4	2.6	25.7	5.6	5.6
10/26/1999	13:41	810	0.047	0.355	11.94	154.9	278.6	702.1	5660.0	994.6	3594.5	3.23	3.46	6	38.2	29.3	2.4	2.6	25.8	5.6	5.6
10/26/1999	13:42	807.6	0.046	0.356	11.94	154.9	278.6	701.5	5669.5	993.0	3589.0	3.20	3.49	6	40.9	29.2	2.4	2.5	25.8	5.6	5.6
10/26/1999	13:43	805.1	0.045	0.354	11.97	154.9	278.6	701.5	5703.3	992.4	3612.5	3.43	3.47	6	33.8	29.1	2.4	2.6	25.8	5.6	5.6
10/26/1999	13:44	803.2	0.044	0.353	11.95	154.9	278.6	692.3	5686.7	992.9	3604.5	3.36	3.53	6	36.2	29.1	2.4	2.6	25.8	5.6	5.6
10/26/1999	13:45	805.7	0.044	0.351	11.93	154.9	278.6	692.1	5713.9	992.1	3590.5	3.40	3.48	6	34.1	29.0	2.4	2.5	25.8	5.6	5.6
10/26/1999	13:46	806.8	0.043	0.350	11.9	154.9	278.6	699.0	5708.7	991.0	3595.3	3.20	3.15	6	36.2	29.0	2.4	2.5	25.8	5.6	5.6
10/26/1999	13:47	804.8	0.043	0.347	11.87	154.9	278.6	697.5	5679.4	990.1	3606.3	3.16	3.03	6	41.2	28.9	2.4	2.5	25.7	5.6	5.6
10/26/1999	13:48	805.8	0.043	0.344	11.9	154.9	278.6	695.4	5704.9	989.6	3604.7	3.30	3.34	6	43.7	28.9	2.4	2.5	25.8	5.6	5.6
10/26/1999	13:49	805.9	0.043	0.346	11.9	154.9	278.6	692.9	5679.4	990.6	3596.4	3.39	3.44	6	19.8	28.8	2.4	2.6	25.8	5.6	5.6
10/26/1999	13:50	806.1	0.043	0.350	11.84	154.9	278.6	692.8	5706.2	992.1	3603.6	3.45	3.37	6	39.5	28.9	2.4	2.6	25.8	5.6	5.6
10/26/1999	13:51	809	0.044	0.358	11.82	154.9	278.6	693.0	5696.4	991.9	3594.8	3.41	3.41	6	38.9	28.8	2.4	2.5	25.7	5.6	5.6
10/26/1999	13:52	808.9	0.045	0.366	11.75	154.9	278.6	696.2	5717.7	989.2	3588.5	3.52	3.36	6	32.8	28.8	2.4	2.5	25.7	5.6	5.6
10/26/1999	13:53	809.7	0.044	0.364	11.78	154.9	278.6	700.8	5690.8	987.0	3588.5	3.32	3.34	6	30.7	28.8	2.4	2.5	25.7	5.6	5.6
Run 3 averages		**808.0**	**0.043**	**0.36**	**11.9**	**154.9**	**275.8**	**700.4**	**5652.0**	**993.3**	**3599.7**	**3.3**	**3.4**	**6.0**	**33.7**	**31.1**	**2.4**	**2.5**	**25.8**	**5.6**	**5.6**

Note-

ESP data for Navajo Unit 3 was collected automatically every minute for the duration of each test run. For brevity, one one-minute data set from each test run is shown here. The full data sets are stored electronically by FERCo and SRP. The "average kw" values shown on the attached sheets are averages over the full test run.

Date Time	Device Name	Sparks/ Minute	Primary Amps	Primary Volts	Secondary Milliamps	Secondary Kilovolts	Kilowatt s	SCR Angle
10/25/1999 15:00	15&16G	7	136	222	969	29	27	122
10/25/1999 15:00	15&16F	41	92	169	556	23	14	86
10/25/1999 15:00	15&16E	32	119	176	744	24	19	95
10/25/1999 15:00	15&16D	2	255	188	1747	22	44	113
10/25/1999 15:00	15&16C	17	208	172	1358	20	34	111
10/25/1999 15:00	15&16H	53	73	204	420	29	13	92
10/25/1999 15:00	13&14H	13	32	182	176	30	4	59
10/25/1999 15:00	13&14G	7	31	175	187	27	4	59
10/25/1999 15:00	13&14F	5	51	155	283	21	6	60
10/25/1999 15:00	13&14E	26	75	162	450	19	11	54
10/25/1999 15:00	13&14D	1	62	140	326	17	7	60
10/25/1999 15:00	13&14C	1	78	138	403	15	9	60
10/25/1999 15:00	11&12C	1	259	190	1783	20	43	124
10/25/1999 15:00	9&10D	2	67	145	296	20	8	60
10/25/1999 15:00	9&10C	9	246	185	1672	22	42	120
10/25/1999 15:00	11&12H	37	117	220	723	28	24	122
10/25/1999 15:00	11&12G	2	145	220	997	27	28	126
10/25/1999 15:00	11&12F	2	181	201	1288	26	33	121
10/25/1999 15:00	11&12E	3	188	186	1274	23	33	119
10/25/1999 15:00	11&12D	1	257	194	1783	22	46	123
10/25/1999 15:00	9&10H	44	114	227	729	31	23	120
10/25/1999 15:00	9&10G	2	146	216	992	27	28	126
10/25/1999 15:00	9&10F	41	135	177	857	23	22	88
10/25/1999 15:00	9&10E	8	181	190	1248	20	32	119
10/25/1999 15:00	7&8D	16	208	184	1328	23	36	120
10/25/1999 15:00	7&8C	21	203	179	1318	22	34	110
10/25/1999 15:00	7&8H	57	56	201	323	32	9	90
10/25/1999 15:00	7&8G	9	139	221	960	25	27	128
10/25/1999 15:00	7&8F	22	159	193	1074	23	28	119
10/25/1999 15:00	7&8E	3	184	197	1272	24	34	121
10/25/1999 15:00	5&6G	9	123	224	837	29	25	128
10/25/1999 15:00	5&6F	3	171	214	1152	26	33	130
10/25/1999 15:00	5&6E	3	183	204	1286	24	34	105
10/25/1999 15:00	5&6D	1	260	195	1791	25	47	128
10/25/1999 15:00	5&6C	16	209	196	1395	21	38	121
10/25/1999 15:00	5&6H	54	73	222	452	32	14	99
10/25/1999 15:00	3&4H	45	89	244	584	34	18	113
10/25/1999 15:00	3&4G	15	125	223	841	29	25	121
10/25/1999 15:00	3&4F	9	178	212	1226	26	35	124
10/25/1999 15:00	3&4E	1	188	194	1296	24	34	119
10/25/1999 15:00	3&4D	5	238	190	1663	23	42	127
10/25/1999 15:00	3&4C	1	259	185	1795	21	43	125
10/25/1999 15:00	1&2D	23	186	187	1219	23	32	109
10/25/1999 15:00	1&2C	15	201	181	1408	21	34	117
10/25/1999 15:00	1&2H	31	105	245	729	34	23	124
10/25/1999 15:00	1&2G	1	128	206	887	25	24	130
10/25/1999 15:00	1&2F	22	165	185	1056	24	28	93
10/25/1999 15:00	1&2E	2	190	186	1277	23	32	120
						Avg kw	**1287**	

Date Time	Device Name	Sparks/ Minute	Primary Amps	Primary Volts	Secondary Milliamps	Secondary Kilovolts	Kilowatts	SCR Angle
10/26/1999 7:54	15&16G	1	138	228	992	30	28	127
10/26/1999 7:54	15&16F	5	178	209	1264	26	34	122
10/26/1999 7:54	15&16E	5	185	204	1283	27	34	122
10/26/1999 7:54	15&16D	3	259	191	1777	23	45	118
10/26/1999 7:54	15&16C	4	248	187	1705	22	43	125
10/26/1999 7:54	15&16H	52	91	224	543	31	18	108
10/26/1999 7:54	13&14H	55	61	216	362	33	11	90
10/26/1999 7:54	13&14G	37	106	225	719	31	21	118
10/26/1999 7:54	13&14F	9	179	211	1251	26	35	120
10/26/1999 7:54	13&14E	1	188	199	1298	24	34	95
10/26/1999 7:54	13&14D	1	262	208	1783	24	50	130
10/26/1999 7:54	13&14C	1	262	189	1707	23	45	115
10/26/1999 7:54	11&12D	6	238	193	1622	22	43	120
10/26/1999 7:54	11&12C	8	231	185	1554	20	39	118
10/26/1999 7:54	9&10F	41	125	179	777	24	20	84
10/26/1999 7:54	9&10E	8	176	189	1212	20	31	118
10/26/1999 7:54	9&10D	1	68	145	298	20	8	60
10/26/1999 7:54	9&10C	8	245	185	1668	22	41	120
10/26/1999 7:54	11&12H	22	117	228	726	30	24	123
10/26/1999 7:54	11&12G	3	142	220	965	28	28	126
10/26/1999 7:54	11&12F	3	176	203	1248	26	33	121
10/26/1999 7:54	11&12E	2	182	187	1234	24	32	118
10/26/1999 7:54	9&10H	41	98	218	611	30	19	111
10/26/1999 7:54	9&10G	9	143	217	963	27	27	126
10/26/1999 7:54	7&8F	3	185	206	1285	24	34	127
10/26/1999 7:54	7&8E	2	186	197	1289	25	34	122
10/26/1999 7:54	7&8D	10	226	188	1469	24	39	126
10/26/1999 7:54	7&8C	10	236	190	1582	23	41	120
10/26/1999 7:54	7&8H	56	52	198	298	32	8	87
10/26/1999 7:54	7&8G	11	133	222	910	25	26	127
10/26/1999 7:54	5&6G	6	123	228	840	30	25	130
10/26/1999 7:54	5&6F	2	172	214	1167	26	33	130
10/26/1999 7:54	5&6E	2	182	202	1282	24	34	104
10/26/1999 7:54	5&6D	1	259	194	1776	25	47	127
10/26/1999 7:54	5&6C	2	244	203	1692	22	45	130
10/26/1999 7:54	5&6H	56	65	220	396	32	12	94
10/26/1999 7:54	3&4H	54	86	246	560	35	18	112
10/26/1999 7:54	3&4G	3	143	235	986	30	30	129
10/26/1999 7:54	3&4F	3	184	215	1277	26	36	125
10/26/1999 7:54	3&4E	2	184	195	1271	24	34	120
10/26/1999 7:54	3&4D	8	236	192	1649	23	42	128
10/26/1999 7:54	3&4C	3	254	186	1756	21	43	124
10/26/1999 7:54	1&2D	8	241	207	1677	25	45	124
10/26/1999 7:54	1&2C	11	219	188	1574	22	38	123
10/26/1999 7:54	1&2H	49	90	239	602	34	19	116
10/26/1999 7:54	1&2G	2	126	209	874	25	23	130
10/26/1999 7:54	1&2F	1	189	195	1241	26	33	100
10/26/1999 7:54	1&2E	1	189	185	1272	23	32	120
						Avg kw	**1523**	

Date Time	Device Name	Sparks/ Minute	Primary Amps	Primary Volts	Secondary Milliamps	Secondary Kilovolts	Kilowatts	SCR Angle
10/26/1999 13:53	1&2C	13	212	185	1504	21	36	120
10/26/1999 13:53	1&2D	20	215	197	1455	24	39	117
10/26/1999 13:53	1&2E	4	185	184	1238	23	31	119
10/26/1999 13:53	1&2F	8	187	194	1227	25	32	100
10/26/1999 13:53	1&2G	2	125	208	868	25	23	130
10/26/1999 13:53	1&2H	49	90	235	608	33	19	115
10/26/1999 13:53	3&4H	54	84	245	544	35	17	112
10/26/1999 13:53	3&4C	7	248	184	1706	21	42	123
10/26/1999 13:53	3&4D	16	211	183	1429	22	36	121
10/26/1999 13:53	3&4E	7	177	193	1211	24	32	117
10/26/1999 13:53	3&4F	2	185	216	1284	26	37	126
10/26/1999 13:53	3&4G	6	142	233	976	29	30	128
10/26/1999 13:53	5&6E	4	180	203	1262	24	34	104
10/26/1999 13:53	5&6F	2	173	215	1172	26	33	130
10/26/1999 13:53	5&6G	11	122	225	836	29	25	129
10/26/1999 13:53	5&6H	55	65	218	397	32	12	94
10/26/1999 13:53	5&6C	5	233	202	1591	22	43	127
10/26/1999 13:53	5&6D	6	253	194	1728	25	46	126
10/26/1999 13:53	7&8C	12	244	193	1650	23	44	122
10/26/1999 13:53	7&8D	12	219	188	1411	24	38	123
10/26/1999 13:53	7&8E	7	182	198	1249	25	33	122
10/26/1999 13:53	7&8F	12	177	204	1216	24	33	125
10/26/1999 13:53	7&8G	20	124	214	841	25	24	122
10/26/1999 13:53	7&8H	55	55	200	324	32	9	90
10/26/1999 13:53	H	27	121	229	750	29	25	125
10/26/1999 13:53	9&10C	6	244	183	1662	22	41	119
10/26/1999 13:53	9&10D	1	68	145	298	20	8	60
10/26/1999 13:53	9&10E	5	174	185	1185	20	30	117
10/26/1999 13:53	9&10F	13	178	198	1194	24	33	102
10/26/1999 13:53	9&10G	7	137	213	922	27	26	123
10/26/1999 13:53	9&10H	33	107	225	685	31	22	116
10/26/1999 13:53	C	5	237	184	1614	20	39	119
10/26/1999 13:53	D	14	224	188	1495	22	39	116
10/26/1999 13:53	E	1	189	186	1292	23	33	120
10/26/1999 13:53	F	5	178	204	1271	26	33	122
10/26/1999 13:53	G	3	144	220	983	28	28	126
10/26/1999 13:53	F	23	166	204	1141	26	32	116
10/26/1999 13:53	G	13	129	234	916	32	27	129
10/26/1999 13:53	H	53	74	223	453	33	14	99
10/26/1999 13:53	C	1	262	191	1701	23	45	115
10/26/1999 13:53	D	1	262	207	1781	24	51	130
10/26/1999 13:53	E	1	188	197	1296	24	34	94
10/26/1999 13:53	D	6	245	188	1666	23	43	115
10/26/1999 13:53	E	13	177	203	1215	27	33	120
10/26/1999 13:53	F	25	162	202	1115	26	30	117
10/26/1999 13:53	G	3	137	229	983	30	28	128
10/26/1999 13:53	H	51	94	226	568	31	19	109
10/26/1999 13:53	C	5	253	190	1744	23	45	127
						Average kW	**1526**	