APPENDIX A

METHOD 1— SAMPLE AND VELOCITY TRAVERSES FOR STATIONARY SOURCES

1. Principle and Applicability

1.1 Principle. To aid in the representative measurement of pollutant emissions and/or total volumetric flow rate from a stationary source, a measurement site where the effluent stream is flowing in a known direction is selected, and the cross-section of the stack is divided into a number of equal areas. A traverse point is then located within each of these equal areas.

1.2 Applicability. This method is applicable to flowing gas streams in ducts, stacks, and flues. The method cannot be used when: (1) flow is cyclonic or swirling (see Section 2.4), (2) a stack is smaller than about 0.30 meter (12 in.) in diameter, or 0.071 m^2 (113 $in.^2$) cross-sectional area, or (3) the measurement site is less than two stack or duct diameters downstream or less than a half diameter upstream from a flow disturbance.

The requirements of this method must be considered before construction of a new facility from which emissions will be measured; failure to do so may require subsequent alterations to the stack or deviation from the standard procedure. Cases involving variants are subject to approval by the Administrator, U.S. Environmental Protection Agency.

2. Procedure

2.1 Selection of Measurement Site. Sampling or velocity measurement is performed at a site located at least eight stack or duct diameters downstream and two diameters upstream from any flow disturbance such as a bend, expansion, or contraction in the stack, or from a visible flame. If necessary, an alternative location may be selected, at a position at least two stack or duct diameters downstream and a half diameter upstream from any flow disturbance. For a rectangular cross section, an equivalent diameter (D_e) shall be calculated from the following equation, to determine the upstream and downstream distances:

$$D_e = \frac{2\,LW}{(L + W)}$$

where: L=length and W=width.

An alternative procedure is available for determining the acceptability of a measurement location not meeting the criteria above. This precedure, determination of gas flow angles at the sampling points and comparing the results with acceptability criteria, is described in Section 2.5.

2.2 Determining the Number of Traverse Points.

2.2.1 Particulate Traverses. When the eight- and two-diameter criterion can be met, the minimum number of traverse points shall be: (1) twelve, for circular or rectangular stacks with

Copyright 1993-1999, The Bureau of National Affairs, Inc.

diameters (or equivalent diameters) greater than 0.61 meter (24 in.); (2) eight, for circular stacks with diameters between 0.30 and 0.61 meter (12-24 in.); (3) nine, for rectangular stacks with equivalent diameters between 0.30 and 0.61 meter (12-24 in.).

When the eight- and two-diameter criterion cannot be met, the minimum number of traverse points is determined from Figure 1-1. Before referring to the figure, however, determine the distances from the chosen measurement site to the nearest upstream and downstream disturbances, and divide each distance by the stack diameter or equivalent diameter, to determine the distance in terms of the number of duct diameters. Then, determine from Figure 1-1 the minimum number of traverse points that corresponds: (1) to the number of duct diameters upstream; and (2) to the number of diameters downstream. Select the higher of the two minimum numbers of traverse points, or a greater value, so that for circular stacks the number is a multiple of 4, and for rectangular stacks, the number is one of those shown in Table 1-1.

Table 1-1. Cross-Section Layout for Rectangular Stacks

Number of traverse points	Matrix layout
9	
12	3x3
16	4x3
20	4x4
25	5x4
30	5x5
36	6x5
42	6x6
49	7x6
	7x7

2.2.2 Velocity (Non-Particulate) Traverses. When velocity or volumetric flow rate is to be determined (but not particulate matter), the same procedure as that for particulate traverses (Section 2.2.1) is followed, except that Figure 1-2 may be used instead of Figure 1-1.

2.3 Cross-sectional Layout and Location of Traverse Points.

2.3.1 Circular Stacks. Locate the traverse points on two perpendicular diameters according to Table 1-2 and the example shown in Figure 1-3. Any equation (for examples, see Citations 2 and 3 in the Bibliography) that gives the same values as those in Table 1-2 may be used in lieu of Table 1-2.

For particulate traverses, one of the diameters must be in a plane containing the greatest expected concentration variation, e.g., after bends, one diameter shall be in the plane of the bend. This requirement becomes less critical as the distance from the disturbance increases; therefore,

Copyright 1993-1999, The Bureau of National Affairs, Inc.

other diameter locations may be used, subject to approval of the Administrator.

In addition for stacks having diameters greater than 0.61 m (24 in.) no traverse points shall be located within 2.5 centimeters (1.00 in.) of the stack walls; and for stack diameters equal to or less than 0.61 m (24 in.), no traverse points shall be located within 1.3 cm (0.50 in.) of the stack walls. To meet these criteria, observe the procedures given below.

2.3.1.1 Stacks With Diameters Greater Than 0.61 m (24 in.). When any of the traverse points as located in Section 2.3.1 fall within 2.5 cm (1.00 in.) of the stack walls, relocate them away from the stack walls to: (1) a distance of 2.5 cm (1.00 in.); or (2) a distance equal to the nozzle inside diameter, whichever is larger. These relocated traverse points (on each end of a diameter) shall be the "adjusted" traverse points.

Whenever two successive traverse points are combined to form a single adjusted traverse point, treat the adjusted point as two separate traverse points, both in the sampling (or velocity measurement) procedure, and in recording the data.

Table 1-2.Location of Traverse Points in Circular Stacks

Traverse point number on a diameter	2	4
1	14.6	
2	85.4	
3		
4		
5		
6		
7		
8		
9		
10		
11		
12		
13		
14		
15		
16		
17		
18		
19		
20		
21		
22		

Copyright 1993-1999, The Bureau of National Affairs, Inc.

23			
24			

Traverse point number on a diameter

	24
1	
2	1.1
3	3.2
4	5.5
5	7.9
6	10.5
7	13.2
8	16.1
9	19.4
10	23.0
11	27.2
12	32.3
13	39.8
14	60.2
15	67.7
16	72.8
17	77.0
18	80.6
19	83.9
20	86.8
21	89.5
22	92.1
23	94.5
24	96.8
	98.9

2.3.1.2 Stacks With Diameters Equal to or Less Than 0.61 m (24 in.). Follow the procedure in Section 2.3.1.1, noting only that any "adjusted" points should be relocated away from the stack walls to: (1) a distance of 1.3 cm (0.50 in.); or (2) a distance equal to the nozzle inside diameter, whichever is larger.

2.3.2 Rectangular Stacks. Determine the number of traverse points as explained in Sections 2.1 and 2.2 of this method. From Table 1-1 , determine the grid configuration. Divide the stack cross-section into as many equal rectangular elemental areas as traverse points, and then locate a traverse point at the centroid of each equal area according to the example in Figure 1-4.

If the tester desires to use more than the minimum number of traverse points, expand the "minimum number of traverse points" matrix (see Table 1-1) by adding the extra traverse points along one or the other or both legs of the matrix; the final matrix need not be balanced. For example, if a 4x3 "minimum number of points" matrix were expanded to 36 points, the final

Copyright 1993-1999, The Bureau of National Affairs, Inc.

matrix could be 9x4 or 12x3, and would not necessarily have to be 6x6. After constructing the final matrix, divide the stack cross-section into as many equal rectangular, elemental areas as traverse points, and locate a traverse point at the centroid of each equal area.

The situation of traverse points being too close to the stack walls is not expected to arise with rectangular stacks. If this problem should ever arise, the Administrator must be contacted for resolution of the matter.

2.4 Verification of Absence of Cyclonic Flow. In most stationary sources, the di-rection of stack gas flow is essentially parallel to the stack walls. However, cyclonic flow may exist (1) after such devices as cyclones and inertial demisters following venturi scrubbers, or (2) in stacks having tangential inlets or other duct configurations which tend to induce swirling; in these instances, the presence or absence of cyclonic flow at the sampling location must be determined. The following techniques are acceptable for this determination.

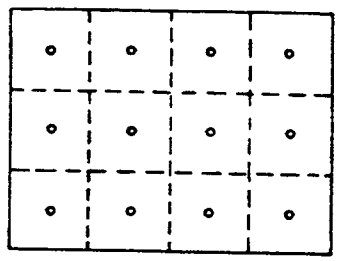

Figure 1-4. Example showing rectangular stack cross section divided into 12 equal areas, with a traverse point at centroid of each area.

Level and zero the manometer. Connect a Type S pitot tube to the manometer. Position the Type S pitot tube at each traverse point, in succession, so that the planes of the face openings of the pitot tube are perpendicular to the stack cross-sectional plane; when the Type S pitot tube is in this position, it is at "0° reference." Note the differential pressure (S p) reading at each traverse point. If a null (zero) pitot reading is obtained at 0° reference at a given traverse point, an acceptable flow condition exists at that point. If the pitot reading is not zero at 0° reference, rotate the pitot tube (up to ±90° yaw angle), until a null reading is obtained. Carefully determine and record the value of the rotation angle (a) to the nearest degree. After the null technique has been applied at each traverse point, calculate the average of the absolute values of a; assign a values of 0° to those points for which no rotation was required, and include these in the overall average. If the average value of a is greater than 20°, the overall flow condition in the stack is unacceptable and alternative methodology, subject to the approval of the Administrator, must be used to perform accurate sample and velocity traverses.

The alternative procedure described in Section 2.5 may be used to determine the rotation angles in lieu of the procedure described above.

2.5 Alternative Measurement Site Selection Procedure. This alternative applies to sources where measurement locations are less than 2 equivalent stack or duct diameters downstream or less than ½ duct diameter upstream from a flow disturbance. The alternative should be limited to ducts larger than 24 in. in diameter where blockage and wall effects are minimal. A directional

Copyright 1993-1999, The Bureau of National Affairs, Inc.

flow-sensing probe is used to measure pitch and yaw angles of the gas flow at 40 or more traverse points; the resultant angle is calculated and compared with acceptable criteria for mean and standard deviation.

NOTE: Both the pitch and yaw angles are measured from a line passing through the traverse point and parallel to the stack axis. The pitch angle is the angle of the gas flow component in the plane that INCLUDES the traverse line and is parallel to the stack axis. The yaw angle is the angle of the gas flow component in the plane PERPENDICULAR to the traverse line at the traverse point and is measured from the line passing through the traverse point and parallel to the stack axis.

2.5.1 Apparatus.

2.5.1.1 Directional Probe. Any directional probe, such as United Sensor Type DA Three-Dimensional Directional Probe, capable of measuring both the pitch and yaw angles of gas flows is acceptable. (NOTE: Mention of trade name or specific products does not constitute endorsement by the U.S. Environmental Protection Agency.) Assign an identification number to the directional probe, and permanently mark or engrave the number on the body of the probe. The pressure holes of directional probes are susceptible to plugging when used in particulate-laden gas streams. Therefore, a system for cleaning the pressure holes by "back-purging" with pressurized air is required.

2.5.1.2 Differential Pressure Gauges. Inclined manometers, U-tube manometers, or other differential pressure gauges (e.g., magnehelic gauges) that meet the specifications described in Method 2, section 2.2.

NOTE: If the differential pressure gauge produces both negative and positive readings, then both negative and positive pressure readings shall be calibrated at a minimum of three points as specified in Method 2, section 2.2.

2.5.2 Traverse Points. Use a minimum of 40 traverse points for circular ducts and 42 points for rectangular ducts for the gas flow angle determinations. Follow section 2.3 and Table 1-1 or 1-2 for the location and layout of the traverse points. If the measurement location is determined to be acceptable according to the criteria in this alternative procedure, use the same traverse point number and locations for sampling and velocity measurements.

2.5.3 Measurement Procedure.

2.5.3.1 Prepare the directional probe and differential pressure gauges as recommended by the manufacturer. Capillary tubing or surge tanks may be used to dampen pressure fluctuations. It is recommended, but not required, that a pretest leak check be conducted. To perform a leak check, pressurize or use suction on the impact opening until a reading of at least 7.6 cm (3 in.) H_2O registers on the differential pressure gauge, then plug the impact opening. The pressure of a leak-free system will remain stable for at least 15 seconds.

2.5.3.2 Level and zero the manometers. Since the manometer level and zero may drift because of vibrations and temperature changes, periodically check the level and zero during the traverse.

2.5.3.3 Position the probe at the appropriate locations in the gas stream, and rotate until zero deflection is indicated for the yaw angle pressure gauge. Determine and record the yaw angle. Record the pressure gauge readings for the pitch angle, and determine the pitch angle' from the calibration curve. Repeat this procedure for each traverse point. Complete a "back-purge" of the pressure lines and the impact openings prior to measurements of each traverse point.

Copyright 1993-1999, The Bureau of National Affairs, Inc.

A post-test check as described in section 2.5.3.1 is required. If the criteria for a leak-free system are not met, repair the equipment, and repeat the flow angle measurements.

2.5.4 Calculate the resultant angle at each traverse point, the average resultant angle, and the standard deviation using the following equations. Complete the calculations retaining at least one extra significant figure beyond that of the acquired data. Round the values after the final calculations.

2.5.4.1 Calculate the resultant angle at each traverse point:

R_i=arc cosine [(cosine Y_i)(cosine P_i)] Eq. 1-2

Where:

R_i=Resultant angle at traverse point i, degree.

Y_i=Yaw angle at traverse point i, degree.

P_i=Pitch angle at traverse point i, degree.

2.5.4.2 Calculate the average resultant for the measurements:

$$R = \frac{\Sigma R_i}{n} \qquad \text{Eq. 1-3}$$

Eq. 1-3

Where:

3=Average resultant angle, degree.

n=Total number of traverse points.

2.5.4.3 Calculate the standard deviations:

$$S_d = \frac{\sum_{i=1}^{n}\left(R_i - R_{avg}\right)^2}{(n-1)}$$

Eq. 1-4

Where:

S_d=Standard deviation, degree.

2.5.5 The measurement location is acceptable if 3£20° and S_d£10°.

2.5.6 Calibration. Use a flow system as described in Sections 4.1.2.1 and 4.1.2.2 of Method 2. In addition, the flow system shall have the capacity to generate two test-section velocities: one between 365 and 730 m/min (1200 and 2400 ft/min) and one between 730 and 1100 m/min (2400 and 3600 ft/min).

2.5.6.1 Cut two entry ports in the test section. The axes through the entry ports shall be perpendicular to each other and intersect in the centroid of the test section. The ports should be elongated slots parallel to the axis of the test section and of sufficient length to allow measurement of pitch angles while maintaining the pitot head position at the test-section centroid.

Copyright 1993-1999, The Bureau of National Affairs, Inc.

To facilitate alignment of the directional probe during calibration, the test section should be constructed of plexiglass or some other transparent material. All calibration measurements should be made at the same point in the test section, preferably at the centroid of the test-section.

2.5.6.2 To ensure that the gas flow is parallel to the central axis of the test section, follow the procedure in Section 2.4 for cyclonic flow determination to measure the gas flow angles at the centroid of the test section from two test ports located 90° apart. The gas flow angle measured in each port must be ±2°of 0°. Straightening vanes should be installed, if necessary, to meet this criterion.

2.5.6.3 Pitch Angle Calibration. Perform a calibration traverse according to the manufacturer's recommended protocol in 5° increments for angles from -60° to +60° at one velocity in each of the two ranges specified above. Average the pressure ratio values obtained for each angle in the two flow ranges, and plot a calibration curve with the average values of the pressure ratio (or other suitable measurement factor as recommended by the manufacturer) versus the pitch angle. Draw a smooth line through the data points. Plot also the data values for each traverse point. Determine the differences between the measured data values and the angle from the calibration curve at the same pressure ratio. The difference at each comparison must be within 2° for angles between 0° and 40° and within 3° for angles between 40° and 60°.

2.5.6.4 Yaw Angle Calibration. Mark the three-dimensional probe to allow the determination of the yaw position of the probe. This is usually a line extending the length of the probe and aligned with the impact opening. To determine the accuracy of measurements of the yaw angle, only the zero or null position need be calilbrated as follows. Place the directional probe in the test section, and rotate the probe until the zero position is found. With a protractor or other angle measuring device, measure the angle indicated by the yaw angle indicator on the three-dimensional probe. This should be within 2° of 0°. Repeat this measurement for any other points along the length of the pitot where yaw angle measurements could be read in order to account for variations in the pitot markings used to indicate pitot head positions.

3. Bibliography

1. Determining Dust Concentration in a Gas Stream, ASME. Performance Test Code No. 27. New York, 1957.

2. Devorkin, Howard, et al. Air Pollution Source Testing Manual. Air Pollution Control District. Los Angeles, CA November 1963.

3. Methods for Determination of Velocity, Volume, Dust and Mist Content of Gases. Western Precipitation Division of Joy Manufacturing Co. Los Angeles, CA. Bulletin WP-50. 1968.

4. Standard Method for Sampling Stacks for Particulate Matter. In: 1971 Book of ASTM Standards, Part 23. ASTM Designation D-2928-71. Philadelphia, PA 1971.

5. Hanson, H. A., et al. Particulate Sampling Strategies for Large Power Plants Including Nonuniform Flow. USEPA, ORD, ESRL, Research Triangle Park, NC. EPA-600/2-76-170, June 1976.

6. Entropy Environmentalists, Inc. Determination of the Optimum Number of Sampling Points: An Analysis of Method 1 Criteria. Environmental Protection Agency, Research Triangle Park,

Copyright 1993-1999, The Bureau of National Affairs, Inc.

NC. EPA Contract No. 68-01-3172, Task 7.

7. Hanson, H.A., R.J. Davini, J.K. Morgan, and A.A. Iversen. Particulate Sampling Strategies for Large Power Plants Including Nonuniform Flow. U.S. Environmental Protection Agency. Research Triangle Park, NC. Publication No. EPA-600/2-76-170. June 1976. 350 p.

8. Brooks, E.F., and R.L. Williams. Flow and Gas Sampling Manual. U.S. Environmental Protection Agency. Research Triangle Park, NC. Publication No. EPA-600/2-76-203. July 1976. 93 p.

9. Entropy Environmentalists, Inc. Traverse Point Study. EPA Contract No. 68-02-3172. June 1977. 19 p.

10. Brown, J. and K. Yu. Test Report: Particulate Sampling Strategy in Circular Ducts. Emission Measurement Branch, Emission Standards and Engineering Division. U.S. Environmental Protection Agency, Research Triangle Park, NC. 27711. July 31, 1980. 12 p.

11. Hawksley, P.G.W., S. Badzioch, and J.H. Blackett. Measurement of Solids in Flue Gases. Leatherhead, England, The British Coal Utilisation Research Association, 1961. p. 129-133.

12. Knapp, K.T. The Number of Sampling Points Needed for Representative Source Sampling. In: Proceedings of the Fourth National Conference on Energy and the Environment, Theodore, L., et al. (ed.). Dayton, Dayton Section of the American Institute of Chemical Engineers. October 3-7, 1976. p. 563-568.

13. Smith, W.S. and D.J. Grove. A Proposed Extension of EPA Method 1 Criteria. "Pollution Engineering." *XV* (8):36-37. August 1983.

14. Gerhart, P.M. and M.J. Dorsey. Investigation of Field Test Procedures for Large Fans. University of Akron. Akron, OH. (EPRI Contract CS-1651). Final Report (RP-1649-5) December 1980.

15. Smith, W.S. and D.J. Grove. A New Look at Isokinetic Sampling-Theory and Applications. "Source Evaluation Society Newsletter." *VIII*(3):19-24. August 1983.

Copyright 1993-1999, The Bureau of National Affairs, Inc.

METHOD 2— DETERMINATION OF STACK GAS VELOCITY AND VOLUMETRIC FLOW RATE (TYPE S PITOT TUBE)

1. Principle and Applicability

1.1 Principle. The average gas velocity in a stack is determined from the gas density and from measurement of the average velocity head with a Type S (Stausscheibe or reverse type) pitot tube.

1.2 Applicability. This method is applicable for measurement of the average velocity of a gas stream and for quantifying gas flow.

This procedure is not applicable at measurement sites which fail to meet the criteria of Method 1, Section 2.1. Also, the method cannot be used for direct measurement in cyclonic or swirling gas streams; Section 2.4 of Method 1shows how to determine cyclonic or swirling flow conditions. When unacceptable conditions exist, alternative procedures, subject to the approval of the Administrator, U.S. Environmental Protection Agency, must be employed to make accurate flow rate determinations; examples of such alternative procedures are: (1) to install straightening vanes; (2) to calculate the total volumetric flow rate stoichiometrically, or (3) to move to another measurement site at which the flow is acceptable.

2. Apparatus

Specifications for the apparatus are given below. Any other apparatus that has been demonstrated (subject to approval of the Administrator) to be capable of meeting the specifications will be considered acceptable.

"Figure 2-1. Type S pitot tube manometer assembly."

2.1 Type S Pitot Tube. The Type S pitot tube (Figure 2-1) shall be made of metal tubing (e.g., stainless steel). It is recommended that the external tubing diameter (dimension D_t Figure 2-2b) be between 0.48 and 0.95 centimeter (3/16 and ôinch). There shall be an equal distance from the base of each leg of the pitot tube to its face-opening plane (dimensions P_A and P_B Figure 2-2b); it is recommended that this distance be between 1.05 and 1.50 times the external tubing diameter. The face openings of the pitot tube shall, preferably, be aligned as shown in Figure 2-2; however, slight misalignments of the openings are permissible (see Figure 2-3).

The Type S pitot tube shall have a known coefficient, determined as outlined in Section 4. An identification number shall be assigned to the pitot tube; this number shall be permanently marked or engraved on the body of the tube.

"Figure 2-2. Properly constructed Type S pitot tube."

Copyright 1993-1999, The Bureau of National Affairs, Inc.

"Figure 2-3. Types of face-opening misalignment that can result from field use or improper construction of Type S pitot tubes."

A standard pitot tube may be used instead of a Type S, provided that it meets the specifications of Sections 2.7 and 4.2; note, however, that the static and impact pressure holes of standard pitot tubes are susceptible to plugging in particulate-laden gas streams. Therefore, whenever a standard pitot tube is used to perform a traverse, adequate proof must be furnished that the openings of the pitot tube have not plugged up during the traverse period; this can be done by taking a velocity head (D*p*) reading at the final traverse point, cleaning out the impact and static holes of the standard pitot tube by "back-purging" with pressurized air, and then taking another D*p* reading. If the D*p* readings made before and after the air purge are the same (±5 percent), the traverse is acceptable. Otherwise, reject the run. Note that if D*p* at the final traverse point is unsuitably low, another point may be selected. If "back-purging" at regular intervals is part of the procedure, then comparative D*p* readings shall be taken, as above, for the last two back purges at which suitably high D*p* readings are observed.

2.2 Differential Pressure Gauge. An inclined manometer or equivalent device is used. Most sampling trains are equipped with a 10-in. (water column) inclined-vertical manometer, having 0.01-in. H_2O divisions on the 0-to 1-in. inclined scale, and 0.1-in. H_2O divisions on the 1- to 10-in. vertical scale. This type of manometer (or other gauge of equivalent sensitivity) is satisfactory for the measurement of D*p* values as low as 1.3 mm (0.05 in.) H_2O. However, a differential pressure gauge of greater sensitivity shall be used (subject to the approval of the Administrator), if any of the following is found to be true: (1) the arithmetic average of all D*p* readings at the traverse points in the stack is less than 1.3 mm (0.05 in.) H_2O; (2) for traverses of 12 or more points, more than 10 percent of the individual D*p* readings are below 1.3 mm (0.05 in.) H_2O; (3) for traverses of fewer than 12 points, more than one D*p* reading is below 1.3 mm (0.05 in.) H_2O. Citation 18 in Bibliography describes commercially available instrumentation for the measurement of low-range gas velocities.

As an alternative to criteria (1) through (3) above, the following calculation may be performed to determine the necessity of using a more sensitive differential pressure gauge:

$$T=\frac{\sum_{i=1}^{n}\sqrt{\Delta p_i+K}}{\sum_{i=1}^{n}\sqrt{\Delta p_i}}$$

Where:

Dp_i=Individual velocity head reading at a traverse point, mm H_2O (in. H_2O).

n=Total number of traverse points.

K=0.13 mm H_2O when metric units are used and 0.005 in. H_2O when English units are used.

If T is greater than 1.05, the velocity head data are unacceptable and a more sensitive differential pressure gauge must be used.

Copyright 1993-1999, The Bureau of National Affairs, Inc.

between the tip and the static pressure holes.

2.7.3 A minimum of eight diameters straight run between the static pressure holes and the centerline of the external tube, following the 90 degree bend.

2.7.4 Static pressure holes of equal size (approximately 0.1 *D*), equally spaced in a piezometer ring configuration.

2.7.5 Ninety degree bend, with curved or mitered junction.

2.8 Differential Pressure Gauge for Type S Pitot Tube Calibration. An inclined manometer or equivalent is used. If the single-velocity calibration technique is employed (see Section 4.1.2.3), the calibration differential pressure gauge shall be readable to the nearest 0.13 mm H_2O (0.005 in. H_2O). For multivelocity calibrations, the gauge shall be readable to the nearest 0.13 mm H_2O (0.005 in. H_2O) for D*p* values between 1.3 and 25 mm H_2O (0.05 and 1.0 in. H_2O), and to the nearest 1.3 mm H_2O (0.05 in. H_2O) for D*p* values above 25 mm H_2O (1.0 in. H_2O). A special, more sensitive gauge will be required to read D*p* values below 1.3 mm H_2O [0.05 in. H_2O] (see Citation 18 in Bibliography).

"Figure 2-4. Standard pitot tube design specifications."

3. **Procedure**

3.1 Set up the apparatus as shown in Figure 2-1. Capillary tubing or surge tanks installed between the manometer and pitot tube may be used to dampen D*p* fluctuations. It is recommended, but not required, that a pretest leak-check be conducted, as follows: (1) blow through the pitot impact opening until at least 7.6 cm (3 in.) H_2O velocity pressure registers on the manometer; then, close off the impact opening. The pressure shall remain stable for at least 15 seconds; (2) do the same for the static pressure side, except using suction to obtain the minimum of 7.6 cm (3 in.) H_2O. Other leak-check procedures, subject to the approval of the Administrator, may be used.

3.2 Level and zero the manometer. Because the manometer level and zero may drift due to vibrations and temperature changes, make periodic checks during the traverse. Record all necessary data as shown in the example data sheet (Figure 2-5).

3.3 Measure the velocity head and temperature at the traverse points specified by Method 1. Ensure that the proper differential pressure gauge is being used for the range of D*p* values encountered (see Section 2.2). If it is necessary to change to a more sensitive gauge, do so, and remeasure the D*p* and temperature readings at each traverse point. Conduct a post-test leak-check (mandatory), as described in Section 3.1 above, to validate the traverse run.

3.4 Measure the static pressure in the stack. One reading is usually adequate.

3.5 Determine the atmospheric pressure.

"Figure 2-5. Velocity traverse data."

Copyright 1993-1999, The Bureau of National Affairs, Inc.

NOTE: If differential pressure gauges other than inclined manometers are used (e.g., magnehelic gauges), their calibration must be checked after each test series. To check the calibration of a differential pressure gauge, compare D*p* readings of the gauge with those of a gauge-oil manometer at a minimum of three points, approximately representing the range of D*p* values in the stack. If, at each point, the values of D*p* as read by the differential pressure gauge and gauge-oil manometer agree to within 5 percent, the differential pressure gauge shall be considered to be in proper calibration. Otherwise, the test series shall either be voided, or procedures to adjust the measured D *p* values and final results shall be used subject to the approval of the Administrator.

2.3 Temperature Gauge. A thermocouple, liquid-filled bulb thermometer, bimetallic thermometer, mercury-in-glass thermometer, or other gauge, capable of measuring temperature to within 1.5 percent of the minimum absolute stack temperature shall be used. The temperature gauge shall be attached to the pitot tube such that the sensor tip does not touch any metal; the gauge shall be in an interference-free arrangement with respect to the pitot tube face openings (see Figure 2-1 and also Figure 2-7 in Section 4). Alternative positions may be used if the pitot tube-temperature gauge system is calibrated according to the procedure of Section 4. Provided that a difference of not more than 1 percent in the average velocity measurement is introduced, the temperature gauge need not be attached to the pitot tube; this alternative is subject to the approval of the Administrator.

2.4 Pressure Probe and Gauge. A piezometer tube and mercury- or water-filled U-tube manometer capable of measuring stack pressure to within 2.5 mm (0.1 in.) Hg is used. The static tap of a standard type pitot tube or one leg of a Type S pitot tube with the face opening planes positioned parallel to the gas flow may also be used as the pressure probe.

2.5 Barometer. A mercury, aneroid, or other barometer capable of measuring atmospheric pressure to within 2.5 mm Hg (0.1 in. Hg) may be used. In many cases, the barometric reading may be obtained from a nearby National Weather Service station, in which case the station value (which is the absolute barometric pressure) shall be requested and an adjustment for elevation differences between the weather station and the sampling point shall be applied at a rate of minus 2.5 mm (0.1 in.) Hg per 30-meter (100 foot) elevation increase or vice-versa for elevation decrease.

2.6 Gas Density Determination Equipment. Method 3 equipment, if needed (see Section 3.6), to determine the stack gas dry molecular weight, and Reference Method 4 or Method 5equipment for moisture content determination; other methods may be used subject to approval of the Administrator.

2.7 Calibration Pitot Tube. When calibration of the Type S pitot tube is necessary (see Section 4), a standard pitot tube is used as a reference. The standard pitot tube shall, preferably, have a known coefficient, obtained either (1) directly from the National Bureau of Standards, Route 270, Quince Orchard Road, Gaithersburg, Maryland, or (2) by calibration against another standard pitot tube with an NBS-traceable coefficient. Alternatively, a standard pitot tube designed according to the criteria given in 2.7.1 through 2.7.5 below and illustrated in Figure 2-4 (see also Citations 7, 8, and 17 in Bibliography) may be used. Pitot tubes designed according to these specifications will have baseline coefficients of about 0.99±0.01.

2.7.1 Hemispherical (shown in Figure 2-4), ellipsoidal, or conical tip.

2.7.2 A minimum of six diameters straight run (based upon *D*, the external diameter of the tube)

Copyright 1993-1999, The Bureau of National Affairs, Inc.

3.6 Determine the stack gas dry molecular weight. For combustion processes or processes that emit essentially CO_2, O_2, CO, and N_2, use Method 3. For processes emitting essentially air, an analysis need not be conducted; use a dry molecular weight of 29.0. For other processes, other methods, subject to the approval of the Administrator, must be used.

3.7 Obtain the moisture content from Reference Method 4 (or equivalent) or from Method 5.

3.8 Determine the cross-sectional area of the stack or duct at the sampling location. Whenever possible, physically measure the stack dimensions rather than using blueprints.

4. Calibration

4.1 Type S Pitot Tube. Before its initial use, carefully examine the Type S pitot tube in top, side, and end views to verify that the face openings of the tube are aligned within the specifications illustrated in Figure 2-2 or 2-3. The pitot tube shall not be used if it fails to meet these alignment specifications.

After verifying the face opening alignment, measure and record the following dimensions of the pitot tube: (a) the external tubing diameter (dimension D_t, Figure 2-2b); and (b) the base-to-opening plane distances (dimensions P_A and P_B, Figure 2-2b). If D_t is between 0.48 and 0.95 cm (3/16 and ó in.) and if P_A and P_B are equal and between 1.05 and 1.50 D_t, there are two possible options: (1) the pitot tube may be calibrated according to the procedure outlined in Sections 4.1.2 through 4.1.5 below, or (2) a baseline (isolated tube) coefficient value of 0.84 may be assigned to the pitot tube. Note, however, that if the pitot tube is part of an assembly, calibration may still be required, despite knowledge of the baseline coefficient value (see Section 4.1.1).

If D_t, P_A, and P_B are outside the specified limits, the pitot tube must be calibrated as outlined in 4.1.2 through 4.1.5 below.

4.1.1 Type S Pitot Tube Assemblies. During sample and velocity traverses, the isolated Type S pitot tube is not always used; in many instances, the pitot tube is used in combination with other source-sampling components (thermocouple, sampling probe, nozzle) as part of an "assembly." The presence of other sampling components can sometimes affect the baseline value of the Type S pitot tube coefficient (Citation 9 in Bibliography); therefore an assigned (or otherwise known) baseline coefficient value may or may not be valid for a given assembly. The baseline and assembly coefficient values will be identical only when the relative placement of the components in the assembly is such that aerodynamic interference effects are eliminated. Figures 2-6 through 2-8 illustrate interference-free component arrangements for Type S pitot tubes having external tubing diameters between 0.48 and 0.95 cm (3/16 and ó in.). Type S pitot tube assemblies that fail to meet any or all of the specifications of Figures 2-6 through 2-8 shall be calibrated according to the procedure outlined in Sections 4.1.2 through 4.1.5 below, and prior to calibration, the values of the intercomponent spacings (pitot-nozzle, pitot-thermocouple, pitot-probe sheath) shall be measured and recorded.

NOTE: Do not use any Type S pitot tube assembly which is constructed such that the impact pressure opening plane of

Copyright 1993-1999, The Bureau of National Affairs, Inc.

the pitot tube is below the entry plane of the nozzle (see Figure 2-6b).

4.1.2 Calibration Setup. If the Type S pitot tube is to be calibrated, one leg of the tube shall be permanently marked A, and the other, B. Calibration shall be done in a flow system having the following essential design features:

"Figure 2-6. Proper pitot tube-sampling nozzle configuration to prevent aerodynamic interference; buttonhook-type- nozzle; centers of nozzle and pitot opening aligned; D, between 0.48 and 0.95 cm (3/16 amd 3/8 in.)."

"Figure 2-7. Proper thermocouple placement to prevent interference; D_t between 0.48 and 0.95 cm (3/16 and 3/8 in.)"

"Figure 2-8. Minimum pitot-sample probe separation needed to preven interference; D_t between 0.48 and 0.95 (3/16 and 3/8 in.). "

4.1.2.1 The flowing gas stream must be confined to a duct of definite cross-sectional area, either circular or rectangular. For circular cross-sections, the minimum duct diameter shall be 30.5 cm (12 in.); for rectangular cross-sections, the width (shorter side) shall be at least 25.4 cm (10 in.).

4.1.2.2 The cross-sectional area of the calibration duct must be constant over a distance of 10 or more duct diameters. For a rectangular cross-section, use an equivalent diameter, calculated from the following equation, to determine the number of duct diameters:

$$D_e = \frac{2LW}{(L+W)} \qquad \text{Eq. 2-1}$$

"Eq. 2-1"

where:

D_e=Equivalent diameter

L=Length

W=Width

To ensure the presence of stable, fully developed flow patterns at the calibration site, or "test section," the site must be located at least eight diameters downstream and two diameters upstream from the nearest disturbances.

NOTE: The eight- and two-diameter criteria are not absolute; other test section locations may be used (subject to approval of the Administrator), provided that the flow at the test site is stable and demonstrably parallel to the duct axis.

4.1.2.3 The flow system shall have the capacity to generate a test-section velocity around 915 m/min (3,000 ft/min). This velocity must be constant with time to guarantee steady flow during calibration. Note that Type S pitot tube coefficients obtained by single-velocity calibration at 915 m/min (3,000 ft/min) will generally be valid to within ±3 percent for the measurement of velocities above 305 m/min (1,000 ft/min) and to within ±5 to 6 percent for the measurement of velocities between 180 and 305 m/min (600 and 1,000 ft/min). If a more precise correlation between C_p and velocity is desired, the flow system shall have the capacity to generate at least four distinct, time-invariant test-section velocities covering the velocity range from 180 to 1,525 m/min (600 to

Copyright 1993-1999, The Bureau of National Affairs, Inc.

5,000 ft/min), and calibration data shall be taken at regular velocity intervals over this range (see Citations 9 and 14 in Bibliography for details).

4.1.2.4 Two entry ports, one each for the standard and Type S pitot tubes, shall be cut in the test section; the standard pitot entry port shall be located slightly downstream of the Type S port, so that the standard and Type S impact openings will lie in the same cross-sectional plane during calibration. To facilitate alignment of the pitot tubes during calibration, it is advisable that the test section be constructed of plexiglas or some other transparent material.

4.1.3 Calibration Procedure. Note that this procedure is a general one and must not be used without first referring to the special considerations presented in Section 4.1.5. Note also that this procedure applies only to single-velocity calibration. To obtain calibration data for the A and B sides of the Type S pitot tube, proceed as follows:

4.1.3.1 Make sure that the manometer is properly filled and that the oil is free from contamination and is of the proper density. Inspect and leak-check all pitot lines; repair or replace if necessary.

4.1.3.2 Level and zero the manometer. Turn on the fan and allow the flow to stabilize. Seal the Type S entry port.

4.1.3.3 Ensure that the manometer is level and zeroed. Position the standard pitot tube at the calibration point (determined as outlined in Section 4.1.5.1), and align the tube so that its tip is pointed directly into the flow. Particular care should be taken in aligning the tube to avoid yaw and pitch angles. Make sure that the entry port surrounding the tube is properly sealed.

4.1.3.4 Read Dp_{std} and record its value in a data table similar to the one shown in Figure 2-9. Remove the standard pitot tube from the duct and disconnect it from the manometer. Seal the standard entry port.

4.1.3.5 Connect the Type S pitot tube to the manometer. Open the Type S entry port. Check the manometer level and zero. Insert and align the Type S pitot tube so that its A side impact opening is at the same point as was the standard pitot tube and is pointed directly into the flow. Make sure that the entry port surrounding the tube is properly sealed.

4.1.3.6 Read Dp_8 and enter its value in the data table. Remove the Type S pitot tube from the duct and disconnect it from the manometer.

4.1.3.7 Repeat steps 4.1.3.3 through 4.1.3.6 above until three pairs of D*p* readings have been obtained.

4.1.3.8 Repeat steps 4.1.3.3 through 4.1.3.7 above for the B side of the Type S pitot tube.

4.1.3.9 Perform calculations, as described in Section 4.1.4 below.

4.1.4 Calculations.

4.1.4.1 For each of the six pairs of D*p* readings (i.e., three from side A and three from side B) obtained in Section 4.1.3 above, calculate the value of the Type S pitot tube coefficient as follows:

"Figure 2-9. Pitot tube calibration data."

Copyright 1993-1999, The Bureau of National Affairs, Inc.

$$C_{p(s)} = C_{p(std)} \sqrt{\frac{\Delta p_{std}}{\Delta p_s}}$$

Equation 2-2

Where:

$C_{p(s)}$=Type S pitot tube coefficient

$C_{p(std)}$=Standard pitot tube coefficient; use 0.99 if the coefficient is unknown and the tube is designed according to the criteria of Sections 2.7.1 to 2.7.5 of this method.

Dp_{std}=Velocity head measured by the standard pitot tube, cm H_2O (in. H_2O)

Dp_s=Velocity head measured by the Type S pitot tube, cm H_2O (in. H_2O)

4.1.4.2 Calculate 5_p (side A), the mean A-side coefficient, and 5_p (side B), the mean B-side coefficient: calculate the difference between these two average values.

4.1.4.3 Calculate the deviation of each of the three A-side values of $5_{p(s)}$from 5_p (side A), and the deviation of each B-side value of $5_{p(s)}$from 5_p (side B). Use the following equation:

$$\text{Deviation} = C_{p(s)} - \overline{C}_p(\text{A or B})$$

Equation 2-3

4.1.4.4 Calculate s, the average deviation from the mean, for both the A and B sides of the pitot tube. Use the following equation:

$$\sigma\,(\text{side A or B}) = \frac{\sum_{1}^{3} |C_{p(s)} - \overline{C}_p(A \text{ or } B)|}{3}$$

Equation 2-4

4.1.4.5 Use the Type S pitot tube only if the values of s (side A) and s (side B) are less than or equal to 0.01 and if the absolute value of the difference between $C_{p(s)}$ (A) and 5_p (B) is 0.01 or less.

4.1.5 Special considerations.

4.1.5.1 Selection of calibration point.

4.1.5.1.1 When an isolated Type S pitot tube is calibrated, select a calibration point at or near the center of the duct, and follow the procedures outlined in Sections 4.1.3 and 4.1.4 above. The Type S pitot coefficients so obtained, i.e., 5_p (side A) and 5_p (side B), will be valid, so long as either: (1) the isolated pitot tube is used; or (2) the pitot tube is used with other components (nozzle, thermocouple, sample probe) in an arrangement that is free from aerodynamic interference effects (see Figures 2-6 through 2-8).

4.1.5.1.2 For Type S pitot tube-thermocouple combinations (without sample probe), select a calibration point at or near the center of the duct, and follow the procedures outlined in Sections 4.1.3 and 4.1.4 above. The coefficients so obtained will be valid so long as the pitot tube-thermocouple combination is used by itself or with other components in an interference-free

Copyright 1993-1999, The Bureau of National Affairs, Inc.

arrangement (Figures 2-6 and 2-8).

4.1.5.1.3 For assemblies with sample probes, the calibration point should be located at or near the center of the duct; however, insertion of a probe sheath into a small duct may cause significant cross-sectional area blockage and yield incorrect coefficient values (Citation 9 in Bibliography). Therefore, to minimize the blockage effect, the calibration point may be a few inches off-center if necessary. The actual blockage effect will be negligible when the theoretical blockage, as determined by a projected-area model of the probe sheath, is 2 percent or less of the duct cross-sectional area for assemblies without external sheaths (Figure 2-10a), and 3 percent or less for assemblies with external sheaths (Figure 2-10b).

4.1.5.2 For those probe assemblies in which pitot tube-nozzle interference is a factor (i.e., those in which the pitot-nozzle separation distance fails to meet the specification illustrated in Figure 2-6a), the value of $C_{p(s)}$ depends upon the amount of free-space between the tube and nozzle, and therefore is a function of nozzle size. In these instances, separate calibrations shall be performed with each of the commonly used nozzle sizes in place. Note that the single-velocity calibration technique is acceptable for this purpose, even though the larger nozzle sizes (>0.635 cm or ¼ in.) are not ordinarily used for isokinetic sampling at velocities around 915 m/min (3,000 ft/min), which is the calibration velocity; note also that it is not necessary to draw an isokinetic sample during calibration (see Citation 19 in Section 6).

4.1.5.3 For a probe assembly constructed such that its pitot tube is always used in the same orientation, only one side of the pitot tube need be calibrated (the side which will face the flow). The pitot tube must still meet the alignment specifications of Figure 2-2 or 2-3, however, and must have an average deviation (s) value of 0.01 or less (see Section 4.1.4.4).

"Figure 2-10. Projected-area models for typical pitot tube assemblies."

4.1.6 Field Use and Recalibration.

4.1.6.1 Field Use.

4.1.6.1.1 When a Type S pitot tube (isolated tube or assembly) is used in the field, the appropriate coefficient value (whether assigned or obtained by calibration) shall be used to perform velocity calculations. For calibrated Type S pitot tubes, the A side coefficient shall be used when the A side of the tube faces the flow, and the B side coefficient shall be used when the B side faces the flow; alternatively, the arithmetic average of the A and B side coefficient values may be used, irrespective of which side faces the flow.

4.1.6.1.2 When a probe assembly is used to sample a small duct (12 to 36 in. in diameter), the probe sheath sometimes blocks a significant part of the duct cross-section, causing a reduction in the effective value of $C_{p(s)}$. Consult Citation 9 in Bibliography for details. Conventional pitot-sampling probe assemblies are not recommended for use in ducts having inside diameters smaller than 12 inches (Citation 16 in Bibliography).

4.1.6.2 Recalibration.

4.1.6.2.1 Isolated Pitot Tubes. After each field use, the pitot tube shall be carefully reexamined in top, side, and end views. If the pitot face openings are still aligned within the specifications illustrated in Figure 2-2 or 2-3, it can be assumed that the baseline coefficient of the pitot tube has

Copyright 1993-1999, The Bureau of National Affairs, Inc.

not changed. If, however, the tube has been damaged to the extent that it no longer meets the specifications of Figure 2-2 or 2-3, the damage shall either be repaired to restore proper alignment of the face openings or the tube shall be discarded.

4.1.6.2.2 Pitot Tube Assemblies. After each field use, check the face opening alignment of the pitot tube, as in Section 4.1.6.2.1; also, remeasure the intercomponent spacings of the assembly. If the intercomponent spacings have not changed and the face opening alignment is acceptable, it can be assumed that the coefficient of the assembly has not changed. If the face opening alignment is no longer within the specifications of Figures 2-2 or 2-3, either repair the damage or replace the pitot tube (calibrating the new assembly, if necessary). If the intercomponent spacings have changed, restore the original spacings or recalibrate the assembly.

4.2 Standard pitot tube (if applicable). If a standard pitot tube is used for the velocity traverse, the tube shall be constructed according to the criteria of Section 2.7 and shall be assigned a baseline coefficient value of 0.99. If the standard pitot tube is used as part of an assembly, the tube shall be in an interference-free arrangement (subject to the approval of the Administrator).

4.3 Temperature Gauges. After each field use, calibrate dial thermometers, liquid-filled bulb thermometers, thermocouple-potentiometer systems, and other gauges at a temperature within 10 percent of the average absolute stack temperature. For temperatures up to 405° C (761° F), use an ASTM mercury-in-glass reference thermometer, or equivalent, as a reference; alternatively, either a reference thermocouple and potentiometer (calibrated by NBS) or thermometric fixed points, e.g., ice bath and boiling water (corrected for barometric pressure) may be used. For temperatures above 405° C (761° F), use an NBS-calibrated reference thermocouple-potentiometer system or an alternate reference, subject to the approval of the Administrator.

If, during calibration, the absolute temperatures measured with the gauge being calibrated and the reference gauge agree within 1.5 percent, the temperature data taken in the field shall be considered valid. Otherwise, the pollutant emission test shall either be considered invalid or adjustments (if appropriate) of the test results shall be made, subject to the approval of the Administrator.

4.4 Barometer. Calibrate the barometer used against a mercury barometer.

5. Calculations

Carry out calculations, retaining at least one extra decimal figure beyond that of the acquired data. Round off figures after final calculation.

5.1 Nomenclature.

A=Cross-sectional area of stack, $m^2(ft^2)$.

B_{ws}=Water vapor in the gas stream (from Method 5 or Reference Method 4), proportion by volume.

C_p=Pitot tube coefficient, dimensionless.

K_p=Pitot tube constant,

Copyright 1993-1999, The Bureau of National Affairs, Inc.

$$34.97 \frac{m}{sec} \left[\frac{(g/g\text{-mole})(mm\ Hg)}{(°K)(mm\ H_2O)} \right]^{1/2}$$

for the metric system and

$$85.49 \frac{ft}{sec} \left[\frac{(lb/lb\text{-mole})(in.\ Hg)}{(°R)(in.\ H_2O)} \right]^{1/2}$$

for the English system.

M_d=Molecular weight of stack gas, dry basis (see Section 3.6) g/g-mole (lb/lb-mole).

M_s=Molecular weight of stack gas, wet basis, g/g-mole (lb/lb-mole).

$=M_d(1-B_{ws}) +18.0\ B_{ws}$

Eq. 2-5

P_{bar}=Barometric pressure at measurement site, mm Hg (in. Hg).

P_g=Stack static pressure, mm Hg (in. Hg).

P^s=Absolute stack gas pressure, mm Hg (in. Hg).

$=P_{bar}+P_g$ Eq. 2-6

P_{std}=Standard absolute pressure, 760 mm Hg (29.92 in. Hg).

Q_{sd}=Dry volumetric stack gas flow rate corrected to standard conditions, dscm/hr (dscf/hr).

t^s=Stack temperature, °C (°F).

T^s=Absolute stack temperature, °K, (°R).

$=273+t_s$ for metric. Eq. 2-7

$=460+t_s$ for English. Eq. 2-8

T_{std}=Standard absolute temperature, 293 °K (528° R).

v^s=Average stack gas velocity, m/sec (ft/sec).

Dp=Velocity head of stack gas, mm H_2O (in. H_2O).

3,600=Conversion factor, sec/hr.

18.0=Molecular weight of water, g/g-mole (lb/lb-mole).

5.2 Average Stack Gas Velocity.

Copyright 1993-1999, The Bureau of National Affairs, Inc.

$$v_s = K_p C_p (\sqrt{\Delta p})_{avg} \sqrt{\frac{T_{s(avg)}}{P_s M_s}}$$

Equation 2-9

5.3 Average Stack Gas Dry Volumetric Flow Rate.

To convert Q_{sd} from dscm/hr (dscf/hr) to dscm/min (dscf/min), divide Q_{sd} by 60.

6. Bibliography

1. Mark, L. S. Mechanical Engineers' Handbook. New York, McGraw-Hill Book Co., Inc. 1951.
2. Perry, J. H. Chemical Engineers' Handbook. New York. McGraw-Hill Book Co., Inc. 1960.
3. Shigehara, R. T., W. F. Todd, and W. S. Smith. Significance of Errors in Stack Sampling Measurements. U.S. Environmental Protection Agency, Research Triangle Park, NC (Presented at the Annual Meeting of the Air Pollution Control Association, St. Louis, MO, June 14-19, 1970.)
4. Standard Method for Sampling Stacks for Particulate Matter. In: 1971 Book of ASTM Standards, Part 23. Philadelphia, PA 1971. ASTM Designation D-2928-71.
5. Vennard, J. K. Elementary Fluid Mechanics. New York. John Wiley and Sons, Inc. 1947.
6. Fluid Meters—Their Theory and Application. American Society of Mechanical Engineers, New York, NY 1959.
7. ASHRAE Handbook of Fundamentals. 1972. p. 208.
8. Annual Book of ASTM Standards, Part 26. 1974. p. 648.
9. Vollaro, R. F. Guidelines for Type S Pitot Tube Calibration. U.S. Environmental Protection Agency. Research Triangle Park, NC (Presented at 1st Annual Meeting, Source Evaluation Society, Dayton, OH, September 18, 1975.)
10. Vollaro, R. F. A Type S Pitot Tube Calibration Study. U.S. Environmental Protection Agency, Emission Measurement Branch, Research Triangle Park, NC July 1974.
11. Vollaro, R. F. The Effects of Impact Opening Misalignment on the Value of the Type S Pitot Tube Coefficient. U.S. Environmental Protection Agency, Emission Measurement Branch, Research Triangle Park, NC. October 1976.
12. Vollaro, R. F. Establishment of a Basline Coefficient Value for Properly Constructed Type S Pitot Tubes. U.S. Environmental Protection Agency, Emission Measurement Branch, Research Triangle Park, NC. November 1976.
13. Vollaro, R. F. An Evaluation of Single-Velocity Calibration Technique as a Means of Determining Type S Pitot Tubes Coefficient. U.S. Environmental Protection Agency, Emission Measurement Branch, Research Triangle Park, NC. August 1975.
14. Vollaro, R. F. The Use of Type S Pitot Tubes for the Measurement of Low Velocities. U.S.

Copyright 1993-1999, The Bureau of National Affairs, Inc.

Environmental Protection Agency, Emission Measurement Branch, Research Triangle Park, NC. November 1976.

15. Smith, Marvin L. Velocity Calibration of EPA Type Source Sampling Probe. United Technologies Corporation, Pratt and Whitney Aircraft Division, East Hartford, CN. 1975.

16. Vollaro, R. F. Recommended Procedure for Sample Traverses in Ducts Smaller than 12 Inches in Diameter. U.S. Environmental Protection Agency, Emission Measurement Branch, Research Triangle Park, NC. November 1976.

17. Ower, E. and R. C. Pankhurst. The Measurement of Air Flow, 4th Ed., London, Pergamon Press. 1966.

18. Vollaro, R. F. A Survey of Commercially Available Instrumentation for the Measurement of Low-Range Gas Velocities. U.S. Environmental Protection Agency, Emission Measurement Branch, Research Triangle Park, NC. November 1976. (Unpublished Paper)

19. Gnyp, A. W., C. C. St. Pierre, D. S. Smith, D. Mozzon, and J. Steiner. An Experimental Investigation of the Effect of Pitot Tube-Sampling Probe Configurations on the Magnitude of the S Type Pitot Tube Coefficient for Commercially Available Source Sampling Probes. Prepared by the University of Windsor for the Ministry of the Environment, Toronto, Canada. February 1975.

Copyright 1993-1999, The Bureau of National Affairs, Inc.

METHOD 3— GAS ANALYSIS FOR THE DETERMINATION OF DRY MOLECULAR WEIGHT

1. *Applicability and Principle*

1.1 Applicability.

1.1.1 This method is applicable for determining carbon dioxide (CO_2) and oxygen (O_2) concentrations and dry molecular weight of a sample from a gas stream of a fossil-fuel combustion process. The method may also be applicable to other processes where it has been determined that compounds other than CO_2, O_2, carbon monoxide (CO), and nitrogen (N_2) are not present in concentrations sufficient to affect the results.

1.1.2 Other methods, as well as modifications to the procedure described herein, are also applicable for some or all of the above determinations. Examples of specific methods and modifications include: (1) A multi-point sampling method using an Orsat analyzer to analyze individual grab samples obtained at each point; (2) a method using CO_2 or O_2 and stoichiometric calculations to determine dry molecular weight; and (3) assigning a value of 30.0 for dry molecular weight, in lieu of actual measurements, for processes burning natural gas, coal, or oil. These methods and modifications may be used, but are subject to the approval of the Administrator, U.S. Environmental Protection Agency (EPA).

1.1.3 Note. Mention of trade names or specific products does not constitute endorsements by EPA.

1.2 Principle. A gas sample is extracted from a stack by one of the following methods: (1) Single-point, grab sampling; (2) single-point, integrated sampling; or (3) multi-point, integrated sampling. The gas sample is analyzed for pecent CO_2, percent O_2, and if necessary, for percent CO. For dry molecular weight determination, either an Orsat or a Fyrite analyzer may be used for the analysis.

2. Apparatus

As an alternative to the sampling apparatus and systems described herein, other sampling systems (e.g., liquid displacement) may be used, provided such systems are capable of obtaining a representative sample and maintaining a constant sampling rate, and are, otherwise, capable of yielding acceptable results. Use of such systems is subject to the approval of the Administrator.

2.1 Grab Sampling (Figure 3-1).

2.1.1 Probe. Stainless steel or borosilicate glass tubing equipped with an in-stack or out-stack filter to remove particulate matter (a plug of glass wool is satisfactory for this purpose). Any other materials, inert to O_2, CO_2, CO, and N_2 and resistant to temperature at sampling conditions, may be used for the probe. Examples of such materials are aluminum, copper, quartz glass, and Teflon.

2.1.2 Pump. A one-way squeeze bulb, or equivalent, to transport the gas sample to the analyzer.

2.2 Integrated Sampling (Figure 3-2).

Copyright 1993-1999, The Bureau of National Affairs, Inc.

2.2.1 Probe. Same as in Section 2.1.1.

2.2.2 Condenser. An air-cooled or water-cooled condenser, or other condenser no greater than 250 ml that will not remove O_2, CO_2, CO, and N_2, to remove excess moisture which would interfere with the operation of the pump and flowmeter.

2.2.3 Valve. A needle valve, to adjust sample gas flow rate.

2.2.4 Pump. A leaf-free, diaphragm-type pump, or equivalent, to transport sample gas to the flexible bag. Install a small surge tank between the pump and rate meter to eliminate the pulsation effect of the diaphragm pump on the rotameter.

2.2.5 Rate Meter. A rotameter, or equivalent rate meter, capable of measuring flow rate to within 2 percent of the selected flow rate. A flow rate range of 500 to 1000 cc/min is suggested.

2.2.6 Flexible Bag. Any leak-free plastic (e.g., Tedlar, Mylar, Teflon) or plastic-coated aluminum (e.g., aluminized Mylar) bag, or equivalent, having a capacity consistent with the selected flow rate and time length of the test run. A capacity in the range of 55 to 90 liters is suggested. To leak check the bag, connect it to a water manometer, and pressurize the bag to 5 to 10 cm H_2O (2 to 4 in. H_2O). Allow to stand for 10 minutes. Any displacement in the water manometer indicates a leak. An alternative leak-check method is to pressurize the bag to 5 to 10 cm (2 to 4 in.) H_2O and allow to stand overnight. A deflated bag indicates a leak.

2.2.7 Pressure Gauge. A water-filled U-tube manometer, or equivalent, of about 30 cm (12 in.), for the flexible bag leak check.

2.2.8 Vacuum Gauge. A mercury manometer, or equivalent, of at least 760 mm (30 in.) Hg, for the sampling train leak check.

2.3 Analysis. An Orsat or Fyrite type combustion gas analyzer. For Orsat and Fyrite analyzer maintenance and operation procedures, follow the instructions recommended by the manufacturer, unless otherwise specified herein.

3. Single-Point, Grab Sampling and Analytical Procedure

3.1 The sampling point in the duct shall either be at the centroid of the cross section or at a point no closer to the walls than 1.00 m (3.3 ft), unless otherwise specified by the Administrator.

3.2 Set up the equipment as shown in Figure 3-1, making sure all connections ahead of the analyzer are tight. If an Orsat analyzer is used, it is recommended that the analyzer be leak checked by following the procedure in Section 6; however, the leak check is optional.

3.3 Place the probe in the stack, with the tip of the probe positioned at the sampling point; purge the sampling line long enough to allow at least five exchanges. Draw a sample into the analyzer, and immediately analyze it for percent CO_2 and percent O_2. Determine the percentage of the gas that is N_2 and CO by subtracting the sum of the percent CO_2 and percent 0_2 O from 100 percent. Calculate the dry molecular weight as indicated in Section 7.2.

3.4 Repeat the sampling, analysis, and calculation procedures until the dry molecular weights of any three grab samples differ from their mean by no more than 0.3 g/g-mole (0.3 lb/lb-mole).

Copyright 1993-1999, The Bureau of National Affairs, Inc.

Average these three molecular weights, and report the results to the nearest 0.1 g/g-mole (0.1 lb/lb-mole).

4. Single-Point, Integrated Sampling and Analytical Procedure

4.1 The sampling point in the duct shall be located as specified in Section 3.1.

4.2 Leak check (optional) the flexible bag as in Section 2.2.6. Set up the equipment as shown in Figure 3-2. Just before sampling, leak check (optional) the train by placing a vacuum gauge at the condenser inlet, pulling a vacuum of at least 250 mm Hg (10 in. Hg), plugging the outlet at the quick disconnect, and then turning off the pump. The vacuum should remain stable for at least 0.5 minute. Evacuate the flexible bag. Connect the probe, and place it in the stack, with the tip of the probe positioned at the sampling point; purge the sampling line. Next, connect the bag, and make sure that all connections are tight.

4.3 Sample at a constant rate. The sampling run should be simultaneous with, and for the same total length of time as, the pollutant emission rate determination. Collection of at least 30 liters (1.00 ft^3) of sample gas is recommended; however, smaller volumes may be collected, if desired.

4.4 Obtain one integrated flue gas sample during each pollutant emission rate determination. Within 8 hours after the sample is taken, analyze it for percent CO_2 and percent O_2 using either an Orsat analyzer or a Fyrite type combustion gas analyzer. If an Orsat analyzer is used, it is recommended that Orsat leak check described in Section 6, be performed before this determination; however, the check is optional. Determine the percentage of the gas that is N_2 and CO by subtracting the sum of the percent CO_2 and percent 0 from 100 percent. Calculate the dry molecular weight as indicated in Section 7.2.

4.5 Repeat the analysis and calculation procedures until the individual dry molecular weights for any three analyses differ from their mean by no more than 0.3 g/g-mole (0.3 lb/lb-mole). Average these three molecular weights, and report the results to the nearest 0.1 g/g-mole (0.1 lb/lb-mole).

5. Multi-Point, Integrated Sampling and Analytical Procedure

5.1 Unless otherwise specified by the Administrator, a minimum of eight traverse points shall be used for circular stacks having diameters less than 0.61 m (24 in.), a minimum of nine shall be used for rectangular stacks having equivalent diameters less than 0.61 m (24 in.), and a minimum of 12 traverse points shall be used for all other cases. The traverse points shall be located according to Method 1. The use of fewer points is subject to approval of the Administrator.

5.2 Follow the procedures outlined in Sections 4.2 through 4.5, except for the following: Traverse all sampling points, and sample at each point for an equal length of time. Record sampling data as shown in Figure 3-3.

Time	Traverse pt.	Q, liter/min	% dev.[a(1)]

Copyright 1993-1999, The Bureau of National Affairs, Inc.

Average			

[a] % dev.=(Q--Qavg)/Qavg X 100 (Must be £ ±10%)

Figure 3-3. Sampling rate data.

6. Leak-Check Procedure for Orsat Analyzer

Moving an Orsat analyzer frequently causes it to leak. Therefore, an Orsat analyzer should be thoroughly leak checked on site before the flue gas sample is introduced into it. The procedure for leak checking an Orsat analyzer is as follows:

6.1 Bring the liquid level in each pipette up to the reference mark on the capillary tubing, and then close the pipette stopcock.

6.2 Raise the leveling bulb sufficiently to bring the confining liquid meniscus onto the graduated portion of the burette, and then close the manifold stopcock.

6.3 Record the meniscus position.

6.4 Observe the menisus in the burette and the liquid level in the pipette for movement over the next 4 minutes.

6.5 For the Orsat analyzer to pass the leak check, two conditions must be met:

6.5.1 The liquid level in each pipette must not fall below the botton of the capillary tubing during this 4-minute interval.

6.5.2 The menisus in the burette must not change by more than 0.2 ml during this 4-minute interval.

6.6 If the anlyzer fails the leak-check procedure, check all rubber connections and stopcocks to determine whether they might be the cause of the leak. Disassemble, clean, and regrease leaking stopcocks. Replace leaking rubber connections. After the analyzer is reassembled, repeat the lead-check procedure.

7. Calculations

7.1 Nomenclature

M_d = Dry molecular weight, g/g-mole (1b/1b-mole).

$\%CO_2$ = Percent CO_2 by volume, dry basis.

$\%O_2$ = Percent O_2 by volume, dry basis.

%CO = Percent CO by volume, dry basis.

Copyright 1993-1999, The Bureau of National Affairs, Inc.

$\%N_2$ = Percent N_2 by volume, dry basis.

0.280 = Molecular weight of N_2 or CO, divided by 100.

0.320 = Molecular wight of O_2 divided by 100.

0.440 = Molecular weight of CO_2 divided by 100.

7.2 Dry Molecular Weight. Use Equation 3-1 to calculate the dry molecular weight of the stack gas.

$$Md = 0.440(\%CO_2) + 0.320\ (\%O_2) + 0.280(\%N_2 + \%CO) \quad \text{Eq. 3-1}$$

NOTE. The above equation does not consider argon in air (about 0.9 percent, molecular weight of 39.9). A negative error of about 0.4 percent is introduced. The tester may choose to include argon in the analysis using procedures subject to approval of the Administrator.

8. BIBLIOGRAPHY

1. Altshuller, A.P. Storage of Gases and Vapors in Plastic Bags. International Journal of Air and Water Pollution. 6:75-81. 1963.

2. Conner, William D. and J.S. Nader. Air Sampling with Plastic Bags. Journal of the American Industrial Hygiene Association. 25:292-297. 1964.

3. Burrell Manual for Gas Analysts, Seventh edition. Burrell Corporation, 2223 Fifth Avenue, Pittsburgh, PA. 15219. 1951.

4. Mitchell, W.J. and M.R. Midgett, Field Reliability of the Orsat Analyzer. Journal of Air Pollution Control Association. 26:491-495. May 1976.

5. Shigehara, R.T., R. M. Neulicht, and W.S. Smith. Validating Orsat Analysis Data from Fossil Fuel-Fired Units. Stack Sampling News. 4(2):21-26. August 1976.

Copyright 1993-1999, The Bureau of National Affairs, Inc.

Endnotes

1 (Popup)

[a] % dev.=(Q--Qavg)/Qavg X 100 (Must be £ ±10%)

Copyright 1993-1999, The Bureau of National Affairs, Inc.

Standard Test Method for Elemental, Oxidized, Particle-Bound, and Total Mercury in Flue Gas Generated from Coal-Fired Stationary Sources (Ontario Hydro Method)[1]

1. Scope

1.1 This method applies to the determination of elemental, oxidized, particle-bound, and total mercury emissions from coal-fired stationary sources.

1.2 This method is applicable to elemental, oxidized, particle-bound, and total mercury concentrations ranging from approximately 0.5 to 100 $\mu g/m^3$.

1.3 This method describes equipment and procedures for obtaining samples from effluent ducts and stacks, equipment and procedures for laboratory analysis, and procedures for calculating results.

1.4 This method is applicable for sampling elemental, oxidized, and particle-bound mercury at the inlet and outlet of emission control devices and for calculating control device mercury collection efficiency.

1.5 Method applicability is limited to flue gas stream temperature within the thermal stability range of the sampling probe and filter components.

1.6 The values stated in SI units are to be regarded as the standard. The values in parentheses are for information only.

1.7 This standard does not purport to address all of the safety concerns, if any, associated with its use. It is the responsibility of the user of this standard to establish appropriate safety and health practices and determine the applicability of regulatory limitations prior to use.

2. Referenced Documents

2.1 *ASTM Standards:*
D 1193 Specification for Reagent Water[2]
D1356 Definitions of Terms Relating to Atmospheric Sampling and Analysis[3]
D 2986 Evaluation of Air-Assay Media by the Monodisperse DOP (Dioctyl Phthalate) Smoke Test[3]
D 3154 Test Method for Average Velocity in a Duct (Pitot Tube Method)[3]

---

[1] This test method is under the jurisdiction of ASTM Committee D-22 on Sampling and Analysis of Atmospheres and is the direct responsibility of Subcommittee D-22.03 on Ambient Atmospheres and Source Emissions.

[2] *Annual Book of ASTM Standards*, Vol 11.01.

[3] *Annual Book of ASTM Standards*, Vol 11.03.

D 3685 Particulates Independently or for Particulates and Collected Residue Simultaneously in Stack Gases[3]
E 1 Specification for ASTM Thermometers[4]
2.2 *Other Standards:*[5]
EPA Method 1 - Sample and Velocity Traverses for Stationary Sources
EPA Method 2 - Determination of Stack Gas Velocity and Volumetric Flow Rate (Type S Pitot Tube)
EPA Method 3 - Gas Analysis for the Determination of Dry Molecular Weight
EPA Method 4 - Determination of Moisture Content in Stack Gases
EPA Method 5 - Determination of Particulate Emissions from Stationary Sources
EPA Method 12 - Determination of Inorganic Lead Emissions from Stationary Sources
EPA Method 29 - Determination of Metals Emissions from Stationary Sources
EPA Method 101A - Determination of Particle-bound and Gaseous Mercury Emissions from Sewage Sludge Incinerators
EPA Method 301 - Field Validation of Pollutant Measurement Methods from Various Waste Media

3. Terminology

3.1 Definitions other than those in 3.2, 3.3, and 3.4 are listed in Definitions D 1356.

3.2 *Definitions:*

3.2.1 *Elemental Mercury*—mercury in its zero oxidation state, Hg^0.

3.2.2 *Oxidized Mercury*—mercury in its mercurous or mercuric oxidation states; Hg_2^{2+} and Hg^{2+}, respectively.

3.2.3 *Elemental Mercury Catch*—mercury collected in the acidified peroxide and potassium permanganate impinger solutions employed in this method. This is believed to be gaseous Hg^0.

3.3.4 *Oxidized Mercury* Catch—mercury collected in the aqueous potassium chloride impinger solution employed in this method. This is believed to be gaseous Hg^{2+}.

3.3.5 *Particle-Bound Mercury* Catch—mercury collected in the front-half of the sampling train.

3.3.6 *Front-half of the Sampling Train* — All mercury collected in the nozzle, probe, any connecters, and the front-half of the sample filter.

---

[4] *Annual Book of ASTM Standards, Vol 14.02*

[5] Available from the U.S. Environmental Protection Agency's Emission Measurement Technical Information Center or Code of Federal Regulations (40 CFR Part 60, Appendix A or 40 CFR Part 61, Appendix B).

3.3.6 *Total Mercury*— all mercury (solid-bound, liquid, or gaseous) however generated or entrained in the flue gas stream (i.e., summation of elemental, oxidized, and particle-bound mercury).

3.4 *Symbols*:

A = cross-sectional area of stack, m^2 (ft^2)
B_{ws} = water vapor in the gas stream, proportion by volume
C_p = pitot tube coefficient, dimensionless
Δp = velocity head of stack gas, mm H_2O (in. H_2O)
ΔH = average pressure differential across the orifice meter, mm H_2O (in. H_2O)
I = isokinetic sampling rate

$$34.97 \frac{m\ [(g/g\text{-}mole)\ (mm\ Hg)]^{1/2}}{\sec\ (K)\ (mm\ H_2O)} \quad \left\{85.49 \frac{ft\ [(lb/lb\text{-}mole)\ (inches\ Hg)]^{1/2}}{\sec\ (°R)\ (inches\ H_2O)}\right\}$$

K_p = pitot tube constant,
L_p = leakage rate observed during the post test leak check, m^3/min (cfm)
L_a = maximum acceptable leakage rate for either a pretest leak check or a leak check
M_s = molecular weight of stack gas, wet basis, g/g-mole (lb/lb-mole)
M_w = molecular weight of water, 18.0 g/g-mole (18.0 lb/lb-mole)
P_{bar} = barometric pressure at the sampling site, mm Hg (in. Hg)
P_s = absolute stack gas pressure, mm Hg (in. Hg)
P_{std} = standard absolute pressure, 760 mm Hg (29.92 in. Hg)
R = ideal gas constant, 0.06236 mm Hg-m^3/K-g-mole (21.85 in. Hg-ft^3/°R-lb-mole)
T_m = absolute average dry gas meter temperature, K (°R)
T_s = absolute stack temperature, K (°R)
T_{std} = standard absolute temperature, 293 K (528°R)
V_m = volume of gas sample as measured by dry gas meter, dcm (dscf)
$V_{m(std)}$ = volume of gas sample measured by the dry gas meter, corrected to standard conditions, dscm (dscf)
$V_{w(std)}$ = volume of water vapor in the gas sample, corrected to standard conditions, scm (scf)
v_s = average stack gas velocity, m/sec (ft/sec)
W_{lc} = total weight of liquid collected in impingers and silica gel, g (lb)
Y = dry gas meter calibration factor
θ = total sampling time, min.
θ_1 = sampling time interval, from the beginning of a run until the first component change, min.

4. Summary of Test Method

4.1 A sample is withdrawn from the flue gas stream isokinetically through a probe/filter system, maintained at the flue gas temperature or 120°C which ever is greater, followed by a series of impingers in an ice bath. Particle-bound mercury is collected in the front-half of the sampling train. Oxidized mercury is collected in impingers containing a chilled aqueous potassium chloride

solution. Elemental mercury is collected in subsequent impingers (one impinger containing a chilled aqueous acidic solution of hydrogen peroxide and three impingers containing chilled aqueous acidic solution of potassium permanganate). Samples are recovered, digested, and then analyzed for mercury using cold-vapor atomic absorption or fluorescence spectroscopy.

5. Significance and Use

5.1 The measurement of particle-bound, oxidized, elemental, and total mercury in stationary source flue gases provides data may be used for dispersion modeling, deposition evaluation, human health and environmental impact assessment, emission reporting, compliance determinations, etc.. Particle-bound, oxidized, and elemental mercury measurements before and after control devices may be necessary for optimizing and evaluating the mercury removal efficiency of emission control technologies.

6. Interferences

None (See method biases in section 15)

7. Apparatus

7.1 *Sampling train*—similar to D 3685 and EPA Method 5 and Method 29 trains as illustrated in Figure 1.

7.1.1 *Probe Nozzle (Probe Tip) and Borosilicate or Quartz Glass Probe*—Glass nozzles are required unless alternate nozzles are constructed of materials that are free from contamination and will not interact with the sample. Probe fittings constructed of Teflon, polypropylene, etc., are required instead of metal fittings to prevent contamination. A single glass piece consisting of a combined probe tip and probe liner may also be used.

7.1.2 *Pitot Tube*—Type S pitot tube. Refer to EPA Method 2, Section 2.2, for a description.

7.1.3 *Differential Pressure Gauges*—Inclined manometers or equivalent devices. Refer to EPA Method 2, Section 2.1, for a description.

7.1.4 *Filter Holder*—constructed of borosilicate glass or Teflon-coated stainless steel with a Teflon filter support or other nonmetallic, noncontaminating support in place of a glass frit or stainless steel wire screen. A Silicone rubber or Teflon gasket, designed to provide a positive seal against leakage from outside or around the filter, may be used.

7.1.5 *Probe and Filter Heating System*—Any heating system capable of maintaining a sample gas temperature exiting the probe and filter to within ±15°C (±27°F) of the flue gas temperature at the sampling location. Temperature sensors capable of measuring temperature to within 3°C (5.4°F) are used to regulate and monitor sample gas temperatures during sampling.

7.1.6 *Condensing/Absorbing System*, consisting of eight impingers immersed in an ice bath and connected in series with leak-free ground glass fittings or other leak-free, noncontaminating fittings. The first, second, fourth, fifth, sixth, and eighth impingers are of the Greenburg-Smith design with a tip modified by replacing the standard tip with 1.3-cm (0.5-in.)-ID straight glass tube extending to about 1.3 cm (0.5 in.) from the bottom of the flask. The third and seventh impingers are also Greenburg-Smith design but with the standard tip including the glass impinging plate. The first, second, and third impingers contain aqueous 1 N potassium chloride (KCl) solution. The fourth impinger contains an aqueous solution of 5% (V/V) nitric acid (HNO_3) and 10% hydrogen peroxide (H_2O_2). The fifth, sixth, and seventh impingers contain an aqueous solution of 4% (V/V) potassium permanganate ($KMnO_4$) and 10% (V/V) sulfuric acid (H_2SO_4). The last impinger contains silica gel or an equivalent desiccant. Refer to Note 1.

Note 1–When sampling flue gas streams with high moisture content (>20%), the sampler must take additional steps to eliminate carryover of impinger contents from one sample type to the next. These steps must include use of oversize impinger(s) or use of an empty impinger between the KCl and HNO_3/H_2O_2 and after the HNO_3/H_2O_2 impingers. If dry impingers are used they must be rinsed as discussed in section 13.2 and the rinse added to whatever impinger solution that follows it.

7.1.7 *Metering System*—Vacuum gauge, leak-free pump, thermometers capable of measuring temperature to within 3°C (5.4°F), and dry gas meter capable of measuring volume to within 2%.

7.1.8 *Barometer*—Mercury aneroid or other barometer capable of measuring atmospheric pressure to within 2.5 mm Hg (0.1 in. Hg). In many cases, the barometric reading may be obtained from a nearby National Weather Service station, in which case the station value (which is the absolute barometric pressure) shall be requested and an adjustment for elevation differences between the weather station and sampling point shall be applied at a rate of negative 2.5 mm Hg (0.1 in. Hg) per 30 m (100 ft) elevation increase or vice versa for elevation decrease.

7.1.9 *Gas Density Determination Equipment*—Temperature sensor (e.g., thermocouple, liquid-filled bulb thermometer, bimetallic thermometer) capable of measuring temperature within 1.5% of the minimum absolute stack temperature and, preferably, attached permanently to the pitot tube or sampling probe in a fixed configuration, such that the sensor tip extends beyond the leading edge of the probe sheath and does not touch any metal. Alternative temperature sensor configurations are described in EPA Method 5, Section 2.1.10. Pressure probe and gauge consisting of a piezometer tube and mercury- or water-filled U-tube manometer capable of measuring stack pressure to within 2.5 mm Hg (0.1 in. Hg). Alternative pressure probes are described in EPA Method 2, Section 2.4. Gas analyzer, if necessary, as described in EPA Method 3.

7.2 *Digestion Apparatus:*

7.2.1 *Dry Block Heater or Hot Water Bath*—A heater capable of maintaining 95°C is required for digestion of samples similar to EPA SW846 Method 7470.

7.2.2 *Ice Bath.*

7.2.3 *Digestion Flasks*—Tubes with screw caps to fit dry block heater, 50- to 70-mL volume, or equivalent, for a water bath or 300-mL biological oxygen demand bottles for SW846 Method 7470. Borosilicate glass test tubes, 35- to 50-mL volume, with rack.

7.2.4 *Microwave or Convection Oven and Teflon Digestion Vessels*, (120 mL) or equivalent digestion vessels with caps equipped with pressure relief valves for the dissolution of ash along with a capping station or the equivalent to seal the digestion vessel caps. A vented microwave or convection oven for heating. In addition, Polymethylpentene (PMP) or equivalent volumetric flasks are recommended for the digested ash solutions.

7.3 *Analytical Equipment*—Dedicated mercury analyzer or equivalent apparatus for the analysis of mercury via cold-vapor atomic absorption spectrometry (CVAAS). Alternatively, cold-vapor atomic fluorescence spectroscopy (CVAFS) may be used. CVAAS is a method based on the absorption of radiation at 253.7 nm by mercury vapor. The mercury is reduced to the elemental state and aerated from solution in a closed system. The mercury vapor passes through a cell positioned in the light path of an atomic absorption spectrometer. Absorbance is measured as a function of mercury concentration. A soda-lime trap and a magnesium perchlorate trap must be used to precondition the gas before it enters the absorption cell.

8. Reagents and Materials

8.1 *Purity of Reagents*—Reagent-grade chemicals shall be used in all tests. Unless otherwise indicated, it is intended that all reagents conform to the specifications of the Committee on Analytical Reagents of the American Chemical Society, where such specifications are available.[6] Other grades may be used, provided it is first ascertained that the reagent is of sufficiently high purity to permit its use without lessening the accuracy of the determination.

8.2 *Purity of Water*—Unless otherwise indicated, references to water shall be understood to mean reagent water as defined by Type II of Specification D 1193.

8.3 *Reagents:*

8.3.1 *Boric Acid (H_3BO_3)*—Purified reagent grade.

8.3.2 *Hydrochloric Acid (HCl)*—Trace metal-grade concentrated hydrochloric acid, sp. gr. 1.18.

8.3.3 *Hydrofluoric Acid (HF)*—Concentrated hydrofluoric acid, 48%-50%.

8.3.4 *Hydrogen Peroxide (H_2O_2)*—30% (V/V) hydrogen peroxide.

---

[6] "Reagent Chemicals, American Chemical Society Specifications," Am. Chemical Soc., Washington, DC. For suggestions on the testing of reagents not listed by the American Chemical Society, see "Reagent Chemicals and Standards," by Joseph Rosin, D. Van Nostrand Co., Inc., New York, NY, and the "United States Pharmacopeia."

8.3.5 *Hydroxylamine Sulfate ($NH_2OH \cdot H_2SO_4$)*—solid.

8.3.6 *Mercury Standard Solution*—A certified [1000 ppm (1000 μg/mL)] mercury standard.

8.3.7 *Nitric Acid (HNO_3)*—Trace metal-grade concentrated nitric acid, sp. gr. 1.42.

8.3.8 *Potassium Chloride (KCl)*—solid.

8.3.9 *Potassium Permanganate ($KMnO_4$)*—solid.

8.3.10 *Potassium Persulfate ($K_2S_2O_8$)*—solid.

8.3.11 *Stannous Chloride ($SnCl_2 \cdot 2H_2O$)*—solid.

8.3.12 *Sulfuric Acid (H_2SO_4)*—Trace metal grade concentrated sulfuric acid, sp. gr. 1.84.

8.4 *Materials:*

8.4.1 *Silica Gel.*

8.4.2 *Crushed Ice.*

8.4.3 *Sample Filters*—Quartz fiber filters, without organic binders, exhibiting at least 99.95% efficiency (<0.05% penetration) for 0.3-μm dioctyl phthalate smoke particles and containing less than 0.2 μg/m^2 of mercury. Test data provided by filter manufacturers and suppliers stating filter efficiency and mercury content are acceptable. However, if no such results are available, determine filter efficiency using Test Method D 2986 and analyze filter blanks for mercury prior to emission testing. Filter material must be unreactive to sulfur dioxide (SO_2) or sulfur trioxide (SO_3).[7] Glass fiber filters that meet these requirements may be used.

8.4.4 *Whatman 40 and 541 Filter Papers (or equivalent)*, for filtration of digested samples.

8.4.5 *Nitrogen gas (N_2)*—Carrier gas of at least 99.998% purity. Alternatively argon gas may be used.

8.4.6 *Anhydrous Magnesium Perchlorate [$Mg(ClO_4)_2$]*—Desiccant-grade solid.

8.4.7 *Soda Lime*—4- to 8-mesh indicator-grade carbon dioxide, absorbent-grade.

---

[7] Felix, L.G.; Clinard, G.I.; Lacey, G.E.; McCain, J.D. "Inertial Cascade Impactor Substrate Media for Flue Gas Sampling," U.S. Environmental Protection Agency, Research Triangle Park, NC 27711, Publication No. EPA-600/7-77-060; June 1977, 83 p.

8.4.8 *Sample containers*—Glass with Teflon-lined lids.

8.5 *Sampling Reagents:*

8.5.1 *KCl Absorbing Solution* (1 N)—Dissolve 74.56 g of KCl in 500 mL of reagent water in a 1000-ml volumetric flask, swirl to mix, and dilute to volume with water. Mix well.

8.5.2 *HNO_3-H_2O_2 Absorbing Solution* (5% HNO_3, 10% H_2O_2)—Add slowly with stirring 50 mL of concentrated HNO_3 to a 1000-mL volumetric flask containing approximately 500 mL of water, and then add carefully with stirring 333 mL of 30% H_2O_2. Dilute to volume with water. Mix well.

8.5.3 *Acidic $KMnO_4$ Absorbing Solution* (4% $KMnO_4$ [W/V], 10% H_2SO_4 [V/V])—Prepare fresh daily before each use (**Warning**—See Note 2). Mix carefully, with stirring, 100 mL of concentrated H_2SO_4 into approximately 800 mL of water. When mixing, be sure to follow standard acid to water to addition procedures and safety precautions associated strong acids. Then add water with stirring to make 1 L: this solution is 10% H_2SO_4 (V/V). Dissolve, with stirring, 40 g of $KMnO_4$ into 10% H_2SO_4 (V/V) and add 10% H_2SO_4 (V/V) with stirring to make 1 L. Prepare and store in glass bottles to prevent degradation.

Note 2—Filter the permanganate solution through Whatman 541 filter paper (or equivalent) to prevent autocatalytic decomposition. Pressure may buildup in the solution storage bottle because of a potential reaction between potassium permanganate and acid. Therefore, these bottles should not be fully filled and should be vented to relieve excess pressure and prevent explosion. Venting is required, but not in a manner that will allow contamination of the solution.

8.6 *Sample Digestion Reagents:*

8.6.1 *Boric Acid Solution (4% W/V)*—Dissolve 4 g H_3BO_3 in water, and dilute to 100 mL.

8.6.2 *Aqua Regia (HCl:HNO_3 3:1)*—Add 3 parts HCl to 1 part HNO_3. Note that this should be made up in advance and allowed to form a dark orange color. This mixture should be loosely capped, as pressure will build as gases form.

8.6.3 *Saturated Potassium Permanganate Solution (5% W/V)*—Mix 5 g potassium permanganate ($KMnO_4$) into water and dilute to 100 mL, and stir vigorously.

8.6.4 *Potassium Persulfate Solution (5% W/V)*—Dissolve 5 g potassium persulfate ($K_2S_2O_8$) in water, and dilute to 100 mL.

8.7 *Analytical Reagents:*

8.7.1 *10% (V/V) Hydrochloric Acid Solution*—Add 100 mL concentrated hydrochloric acid to water, and dilute to 1 L.

8.7.2 *Stannous Chloride Solution (10% W/V)*—Dissolve 100 g stannous chloride ($SnCl_2 \cdot 2H_2O$) in 10% HCl, and dilute with 10% HCl to 1 L. Difficulty in dissolving the stannous chloride

can be overcome by dissolving in a more concentrated HCl solution (such as 100 mL of 50% HCl) and diluting to 1L with water; note that care must be taken in adding water to a strong acid solution. A lump of mossy tin (~0.5 g) is than added to this solution.

8.7.3 *Mercury Standards*:

8.7.3.1 *10 ppm (mg/L) Hg Stock Solution*—Dilute 1 mL of 1000 ppm Hg standard solution to 100 mL with 10% HCl.

8.7.3.2 *100 ppb (µg/L) Hg Stock Solution*—Dilute 1 mL of 10 ppm Hg stock solution to 100 mL with 10% HCl.

8.7.3.3 *Working Hg Standards*—Prepare working standards of 1.0-, 5.0-, 10.0-, and 20.0-ppb Hg from the 100-ppb stock solution by diluting 1, 5, 10, and 20 mL each to 100 mL with 10% HCl. **Note**: If samples to be analyzed are less than 1.0 ppb Hg, working standards should be prepared at 0.05, 0.1, 0.5, and 1.0 ppb Hg from a 10-ppb Hg standard solution.

8.7.3.4 *Quality Control Standard (QC)*—A quality control standard is prepared from a separate Hg standard solution. The QC should be prepared at a concentration of approximately one-half the calibration range.

8.8 *Glassware Cleaning Reagents*—Glassware should be cleaned according to the guidelines outlined in EPA Water and Waste 600/4-79-019, Section 4, pages 4-5. It is recommended that an acidic cleaning solution be used, such as Citranox®.

9. Hazards

9.1 *Warning*:

9.1.1 Hazards to personnel exist in the operation of the cold-vapor atomic absorption spectrophotometer. Refer to the manufacturer's instruction manual before operating the instrument.

9.1.2 Sample digestion with hot concentrated acids creates a safety problem. Observe appropriate laboratory procedures for working with concentrated acids.

9.2 *Precaution:*

9.2.1 The determination of microquantities of mercury species requires meticulous attention to details. Good precision is generally unattainable without some experience with stack-sampling procedures. Precision may be improved by knowledge of, and close adherence to, the suggestions that follow.

9.2.1.1 All glassware used in the method must be cleaned thoroughly, as described in Section 11.1.3.

9.2.1.2 Use the same reagents and solutions in the same quantities for a group of determinations and the corresponding blank. When a new reagent is prepared or a new stock of filters is used, a new blank must be prepared.

10. Sampling

10.1 *Preparation for Test:*

10.1.1 *Preliminary Stack Measurements*—Select the sampling site, and determine the number of sampling points, stack pressure, temperature, moisture, dry molecular weight, and range of velocity head in accordance with procedures of Test Method D 3154 or EPA Methods 1 through 4.

10.1.2 Select the correct nozzle diameter to maintain isokinetic sampling rates based on the range of velocity heads determined in 10.1.1.

10.1.3 Ensure that the proper differential pressure gauge is selected for the range of velocity heads (refer to EPA Method 2, Section 2.2).

10.1.4 Select a suitable probe length such that all traverse points can be sampled. Consider sampling from opposite sides of the stack to minimize probe length when sampling a large duct or stack.

10.1.5 *Sampling Time and Volume*—The total sampling time for this method is to be 2 but not more than 3 hours using a nozzle size that will guarantee a minimum isokinetic gas sample volume, $V_{m(std)}$, of 1.5 dry cubic meters corrected to standard conditions (dscm) to a maximum of 2.5 dscm. If traverse sampling is done (recommended for sampling electric utilities), use the same points for sampling that were used for the velocity traverse as stated in 10.1.1. Each traverse point must be sampled for a minimum of 2 minutes.

11. Preparation of Apparatus

11.1 *Pretest Preparation:*

11.1.1 Weigh several 200- to 300-g portions of silica gel in airtight containers to the nearest 0.5 g. Record the total weight of the silica gel plus container on each container. Alternatively, the silica gel can be weighed directly in the impinger immediately prior to assembling the train.

11.1.2 Desiccate the filters at 20° ± 5.6°C (68° ± 10°F) and ambient pressure for 24 to 36 hours and weigh at intervals of at least 6 hours to a constant weight, i.e., <0.5-mg change from previous weighing; record results to the nearest 0.1 mg. Alternatively, the filters may be oven-dried at 105°C (220°F) for 2 to 3 hours, desiccated for 2 hours, and weighed.

11.1.3 Clean all sampling train glassware as described in Section 8.8 before each series of tests at a single source. Cover all glassware openings where contamination can occur until the sampling train is assembled for sampling.

11.2 *Preparation of Sampling Train:*

11.2.1 Assemble the sampling train as shown in Figure 1.

11.2.2 Place 100 mL of the potassium chloride solution (Section 8.5.1 of this method) in each of the first, second, and third impingers, as indicated in Figure 1.

11.2.3 Place 100 mL of the HNO_3-H_2O_2 solution (Section 8.5.2 of this method) in the fourth impinger.

11.2.4 Place 100 mL of the acidic $KMnO_4$ absorbing solution (Section 8.5.3 of this method) in each of the fifth, sixth, and seventh impingers, as indicated in Figure 1.

11.2.5 Transfer approximately 200 to 300 g of silica gel from its container to the last impinger.

11.2.6 Prior to final train assembly, weigh and record the weight of each impinger. This information is required to calculate the moisture content of the sampled flue gas.

11.2.7 To ensure leak-free sampling train connections and to prevent possible sample contamination problems, use Teflon tape, Teflon-coated O-rings, or other noncontaminating material instead of silicone grease.

11.2.8 Place a weighed filter in the filter holder using a tweezer or clean disposable surgical gloves.

11.2.9 Install the selected nozzle using a Viton A O-ring or equivalent when stack temperatures are less than 260°C (500°F) and an alternative gasket material when temperatures are higher. Other connecting systems, such as Teflon ferrules or ground glass joints may also be used on probe and nozzle.

11.2.10 Mark the probe with heat-resistant tape or by some other method to denote the proper distance into the stack or duct for each sampling point.

11.2.11 Place crushed ice around the impingers.

11.2.12 Leak-Check Procedures. Follow the leak-check procedures given in EPA Method 5, Section 4.1.4.1 (Pretest Leak Check), Section 4.1.4.2 (Leak Checks During the Sample Run), and Section 4.1.4.3 (Post test Leak Checks).

12. Calibration and Standardization

12.1 *Sampling Train Calibration:*

12.1.1 *Probe Nozzle*—Refer to EPA Method 5, Sections 2.2.1 and 2.1.2

12.1.2 *Pitot Tube*—Refer to EPA Method 2, Section 4.

12.1.3 *Metering System*—Refer to EPA Method 5, Section 5.3.

12.1.4 *Probe Heater*—Refer to EPA Method 5, Section 5.4.

12.1.5 *Temperature Gauges*— Refer to EPA Method 5, Section 5.5. After each field use, calibrate dial thermometers, liquid-filled bulb thermometers, thermocouple-potentiometer systems, and other gauges at a temperature within 10% of the average absolute stack temperature. For temperatures of ≤405°C (761°F), calibrate against an American Society for Testing and Materials (ASTM) mercury-in-glass reference thermometer, or equivalent, as a reference; alternatively, either a reference thermocouple and potentiometer (calibrated by NIST [National Institute of Standards and Technology]) or thermometric fixed points, e.g., ice bath and boiling water (corrected for barometric pressure) may be used. Absolute temperatures measured with the gauge being calibrated must agree within 1.5% of the reference gauge.

12.1.6 *Leak Check of the Metering System*—Refer to EPA Method 5, Section 5.6.

12.1.7 *Barometer*—Calibrate the barometer used against a mercury barometer.

12.2 *Atomic Absorption or Fluorescence Spectrometer Calibration*—Instrument setup and optimization should be performed according to the manufacturer's specifications. Cold-vapor generation of mercury is performed via addition of stannous chloride solution to reduce oxidized mercury to its elemental state. The mercury laden solution is then purged with a carrier gas into the atomic absorption cell. This procedure is used to calibrate the instrument using 10% HCl as the blank along with the standards in Section 8.7.3.3. Calibration is verified by analyzing the quality control (QC) standard prepared according to Section 8.7.3.4 of this method.

13. Procedure

13.1 *Sampling Train Operation:*

13.1.1 Maintain an isokinetic sampling rate within 10% of true isokinetic, and maintain probe and filter exit gas stream temperatures within ±15°C of the flue gas temperature at the sampling location. However at no time is the probe to be allowed be at a temperature lower than 120°C. The minimum temperature is stipulated to ensure no moisture or acid condensation occurs in the front-half of the sampling train.

13.1.2 Record the data, as indicated in Figure 2, at least once at each sample point but not less than once every 5 minutes.

13.1.3 Record the dry gas meter reading at the beginning of a sampling run, the beginning and end of each sampling time increment, before and after each leak check, and when sampling is halted.

13.1.4 Level and zero the manometer. Periodically check the manometer level and zero, because it may drift during the test period.

13.1.5 Clean the portholes prior to the sampling run.

13.1.6 Remove the nozzle cap. Verify that the filter and probe heating systems are up to temperature and that the pitot tube and probe are properly positioned.

13.1.7 Start the pump. Position the nozzle at the first traverse point with the nozzle tip pointing in the direction of flow. Seal the openings around the probe and porthole to prevent unrepresentative dilution of the gas stream. Read the pitot tube manometer, start the stopwatch, open and adjust the control value until the isokinetic sampling rate is obtained (refer to EPA Method 5, Section 4.1.5, for information on isokinetic sampling rate computations), and maintain the isokinetic rate at all points throughout the sampling period.

13.1.8 When sampling at one traverse point has been completed , move the probe to the next traverse point as quickly as possible. Close the coarse adjust valve and shut the pump off when transferring the probe from one sample port to another. Exclude the time required to transfer the probe from one port to another from the total sampling time.

13.1.9 Traverse the stack cross section, as required by EPA Method 1.

13.1.10 During sampling, periodically check and, if necessary, adjust the probe and filter exit sample gas temperatures, as well as the zero of the manometer.

13.1.11 Add more ice, if necessary, to maintain a temperature of <20°C (68°F) at the condenser/silica gel outlet.

13.1.12 Replace the filter assembly if the pressure drop across the filter becomes such that maintaining isokinetic sampling is no longer possible. Conduct a leak check (refer to EPA Method 5, Section 4.1.4.2) before installing a new filter assembly. The total particulate weight and determination of particle-bound mercury will include all filter assembly catches.

13.1.13 The depletion of $KMnO_4$ via reduction reactions with flue gas constituents other than elemental mercury may render it impossible to sample for the desired minimum time. This problem is indicated by the complete bleaching of the purple color of the acidified permanganate solution. If the purple color is lost, the sample recovery procedures should be altered to determine if breakthrough has occurred. This determination is made by analyzing the acidified permanganate solutions in Impingers 5 through 7 separately. If greater than 25% of the total elemental mercury is trapped in the seventh impinger, then significant breakthrough is probable, and the sampling should be repeated. If the gas stream is known to contain large amounts of reducing constituents (i.e. >2500 ppm SO_2) or breakthrough has occurred in previous sampling runs, then the following modification is suggested: the amount of peroxide (10%) in the fourth impinger should be doubled and/or a second peroxide impinger should be used to increase the oxidation capacity for reducing gas components prior to the acidified permanganate impingers. Alternatively, the sample run may be divided into two or more subruns to ensure that the absorbing solution is not depleted.

13.1.14 Use a single train for the entire sample run, except whene simultaneous sampling is required in two or more separate ducts or at two or more different locations within the same duct or when equipment failure necessitates a change of trains.

13.1.15 At the end of a sample run, turn off the coarse adjust valve, remove the probe and nozzle from the stack, record the final dry gas meter reading, and conduct a posttest leak check, as described in EPA Method 5, Section 4.1.4.3. Also, leak-check the pitot lines as described in EPA Method 2, Section 3.1; the lines must pass the leak check to validate the velocity head data.

13.1.16 Calculate percent isokinetic to determine whether the run was valid or another test run should be performed (refer to Section 14.8).

13.2 *Sample Recovery:*

13.2.1 Allow the probe to cool before proceeding with sample recovery. When probe can be safely handled, wipe off all external particulate matter near the tip of the probe nozzle and place a rinsed, noncontaminating cap over the probe nozzle to prevent losing or gaining particulate matter. Do not cap the probe tip tightly while the sampling train is cooling; a vacuum can form in the filter holder with the undesired result of drawing liquid from the impingers onto the filter.

13.2.2 Before moving the sampling train to the cleanup site, remove the probe from the sampling train and cap the open outlet. Be careful not to lose any condensate that may be present. Cap the filter inlet where the probe was fastened. Remove the umbilical cord from the last impinger and cap the impinger. Cap the filter holder outlet and impinger inlet. Use noncontaminating caps, whether ground-glass stoppers, plastic caps, serum caps, or Teflon tape, to close these openings.

13.2.3 Alternatively, the following procedure may be used to disassemble the train before the probe and filter holder/oven are completely cooled. Initially disconnect the filter holder outlet/impinger inlet, and loosely cap the open ends. Then disconnect the probe from the filter holder or cyclone inlet, and loosely cap the open ends. Cap the probe tip, and remove the umbilical cord as previously described.

13.2.4 Transfer the probe and filter-impinger assembly to a cleanup area that is clean and protected from the wind and other potential causes of contamination or loss of sample. Inspect the train before and during disassembly and note any abnormal conditions.

13.2.5 The impinger train sample recovery scheme is illustrated in Figure 3.

13.2.6 *Container 1 (Sample Filter)*—Carefully remove the sample filter from the filter holder as not to loose any ash, and place it in its labeled petri dish container. To handle the filter, use either acid-washed polypropylene or Teflon-coated tweezers or clean, disposable surgical gloves rinsed with water and dried. If it is necessary to fold the filter, make certain the particulate cake is inside the fold. Transfer any particulate matter or filter fibers that adhere to the filter holder gasket to the filter in the petri dish. A dry (acid-cleaned) nonmetallic bristle brush should be used to remove any remaining particulate matter. Do not use any metal-containing materials when recovering this train. Immediately cover and seal the labeled petri dish.

13.2.7 *Container 2 (Probe Rinse)*—Quantitatively recover particulate matter and any condensate from the probe nozzle, probe fitting, probe liner, and front half of the filter holder by washing these components with 0.1 N HNO_3. A nonmetallic brush may also be used for removing particulate.

13.2.8 *Container 3 (Impingers 1 through 3, KCl Impinger Contents and Rinses):*

13.2.8.1 Dry the exterior surfaces of Impingers 1, 2, and 3. Then weigh and record the weight of each impinger (to the nearest 0.5 g).

13.2.8.2 Clean the filter support, the back half of the filter housing, and connecting glassware by thoroughly rinsing with 0.1 N HNO_3 using the procedure as applicable in Method 12, Section 5.2.4. Pour the rinse into a glass sample container.

13.2.8.3 Add H_2SO_4-$KMnO_4$ to each impinger until a purple color remains.

13.2.8.4 Pour all the liquid from the three KCl impingers into sample container 3.

13.2.8.5 Rinse the impingers and connecting glassware with 0.1 N HNO_3. If deposits remain on the impinger surfaces, remove them by rinsing with 8 N HCl.

13.2.8.6 Perform a final rinse of the impingers and connecting glassware with 0.1 N HNO_3.

13.2.8.7 Pour the rinses into sample container 3.

13.2.8.8 Mark the height of the fluid level, seal the container, and clearly label the contents.

13.2.9 *Container 4 (Impinger 4, HNO_3-H_2O_2 Impinger Contents and Rinses):*

13.2.9.1 Dry the exterior surfaces of Impinger 4. Then weigh and record the weight of this impinger (to the nearest 0.5 g).

13.2.9.1 Pour the HNO_3-H_2O_2 absorbing solution into a glass sample container.

13.2.9.2 Rinse the acidified peroxide impinger and connecting glassware a minimum of two times with 0.1N HNO_3, and pour the rinses into sample container 4.

13.2.10 *Container 5 (Impingers 5 through 7, $KMnO_4$-H_2SO_4 Impinger Contents and Rinses):*

13.2.10.1 Dry the exterior surfaces of Impingers 5, 6, and 7. Then weigh and record the weight of each impinger (to the nearest 0.5 g).

13.2.10.2 Pour all of the liquid from the three acidified permanganate impingers into a glass sample container.

13.2.10.3 Rinse the impingers and connecting glassware with 0.1 N HNO_3. If deposits remain on the impinger surfaces, remove them by rinsing with 8 N HCl.

13.2.10.4 Perform a final rinse of the impingers and connecting glassware with 0.1 N HNO_3.

13.2.10.5 Pour the rinses into sample container 5, carefully assuring transfer of all loose precipitated materials from the three impingers. As option the solution and rinses from impinger 7 many be recovered and analyzed separately to determine if breakthrough of the permanganate impingers occurred).

13.2.10.6 Mark the height of the fluid level, seal the container, and clearly label the contents (Refer to **Note 3**).

Note 3—Because of the potential reaction of $KMnO_4$ with acid, pressure can buildup in the sample storage flask, do not fill the container completely, and take precautions to relieve excess pressure.

13.2.11 *Container 6 (Impinger 8, Silica Gel Impinger Contents)*:

13.2.11.1 Dry the exterior surfaces of Impinger 8. Then weigh and record the weight of this impinger (to the nearest 0.5 g).

13.2.11.2 Note the color of the indicating silica gel to determine whether it has been completely spent, and make a notation of its condition. Transfer the silica gel from its impinger to its original container, and seal it.

13.2.12 *Container 7 (0.1 N HNO_3 Blank)*—At least once during each field test, place 300 mL of the 0.1 N HNO_3 solution used in the sample recovery process into a properly labeled container. Seal the container.

13.2.13 Container 8 (1 N KCl Blank)—At least once during each field test, place 100 mL of the 1 N KCl solution used as the impinger solution into a properly labeled container. Seal the container.

13.2.14 *Container 9 (5% [V/V] HNO_3-10% [V/V] H_2O_2 Blank)*—At least once during each field test, place 100 mL of the 5% HNO_3-10% H_2O_2 solution used as the nitric acid impinger reagent into a properly labeled container. Seal the container.

13.2.15 *Container 10 (Acidified $KMnO_4$ Blank)*—At least once during each field test, place 100 mL of the acidified $KMnO_4$ solution used as the impinger solution and in the sample recovery process into a properly labeled container.

13.2.15.1 Refer to Note 2 in Section 13.2.10.6.

13.2.16 *Container 11 (8 N HCl Blank)*—At least once during each field test, place 200 mL of water into a properly labeled sample container. Then carefully add with stirring 25 mL of 8 N HCl. Mix well, and seal the container.

13.2.17 *Container 12 (Sample Filter Blank)*—Once during each field test, place into a properly labeled petri dish three unused blank filters from the same lot as the sampling filters. Seal the petri dish.

13.2.18 After all impingers and connectors have been properly rinsed and the solutions recovered, the glassware should be cleaned according to the procedures in Section 8.8, or triple rinsed with 10% (V/V) HNO_3 followed by a triple rinsing with DI water. At least once during a day the water from the DI rinse must be analyzed as a QA/QC check. However, if a new source is to be sampled or if there are any brown stains than the glassware must be cleaned according to procedures in Section 8.8.

13.3 *Sample Preparation:*

13.3.1 *Ash Sample* (Containers 1 and 2)—Use the mass of the ash and filter along with the tare weight of the filter to determine the amount of ash collected. If a large amount of ash is on the filter, carefully, so not to loose any ash, remove the ash to create a raw ash sample from which a representative aliquot can be taken for digestion. Record the weight of ash and the weight of the filter with ingrained particulate. Treat the filter with ingrained particulate as a second sample. Combine these results for the total filter ash results. If the filter is cleaned such that the mass of ash remaining on the filter relative to the total mass of material collected is insignificant, then eliminate the analyte remaining on the filter from consideration. If the mass of ash collected on the filter is small (less than 1 g), digest the entire filter along with the ash.

13.3.2 *Ash Digestion*—Accomplish the complete dissolution of ash by one of the following methods or an equivalent alternative method. The following methods are for the dissolution of inorganic samples, such as ash or sediments, for the analysis of trace elements including mercury.

13.3.2.1 *Microwave Digestion*—The use of this method assumes proper training in microwave digestion techniques. In addition, this method is tailored for a CEM MDS-2100 microwave system and may need to be modified for other systems. A 0.5-g ash sample, accurately weighed to 0.0001 g, is placed in a Teflon microwave digestion vessel with 3 mL HF, 3 mL HNO_3, and 3 mL HCl. The vessel is sealed and placed in the microwave (along with other vessels). The vessels are slowly heated to 50 psi which is held for 5 minutes, followed by heating to 80 psi which is held for 20 minutes. The vessels are allowed to cool to room temperature before venting. 15 mL of 4% boric acid is added to each vessel. The vessels are sealed and placed in the microwave again. The vessels are slowly heated to 50 psi and held for 10 minutes. The vessels are again allowed to cool to room temperature before venting. The contents of each vessel are quantitatively transferred to a 50-mL PMP or polypropylene (PP) volumetric flask and diluted; note that care must be taken in adding water to a strong acid solution.

13.3.2.2 *Conventional Digestion*—The use of this method assumes proper training in Teflon bomb digestion techniques. A 0.5-g ash sample, accurately weighed to 0.0001 g, is placed in a Teflon digestion vessel (PFA bomb) with 7 mL HF and 5 mL Aqua Regia. The vessel is

sealed and placed in an oven or water bath at 90°C for a minimum of 8 hours (these may be heated overnight)(along with other vessels). The vessels are allowed to cool to room temperature before venting. 3.5 g of boric acid and 40 mL of water are added to each vessel. The vessels are sealed and placed in the oven or water bath for an additional 1 hour. The vessels are again allowed to cool to room temperature before venting. The contents of each vessel are quantitatively transferred to a 100-mL PMP or PP volumetric flask and diluted: note that care must be taken in adding water to a strong acid solution.

13.3.3 *Preparation of Aqueous KCl Impinger Solution* (Container 3)—Adjust sample in a 500-mL volumetric flask to volume with water, and mix. A modification of EPA SW 846 7470 is used to digest the sample prior to analysis. The main modification is that the volumes of reagents and of sample have been reduced tenfold to reduce waste. This reduction in reagent volume is acceptable because modern dedicated mercury analyzers do not require the large volumes that previous manual methods required. A 10-mL aliquot of the sample is transferred to a digestion tube with a screw cap. 0.5 mL H_2SO_4, 0.25 mL HNO_3, and 1.5 mL 5% $KMnO_4$ solution are added. The solution is mixed and allowed to stand for 15 minutes. 0.75 mL 5% $K_2S_2O_8$ solution is added, and the tube is loosely capped. The tube is placed in a dry block heater or water bath equipped with a temperature probe and heated to 95°C. The temperature must not be allowed to exceed 95°C. The sample is held at 95°C for two hours before allowing it to cool to room temperature. The purple color from the added permanganate solution must remain throughout the digestion. Clearing of the solution during the heating indicates the depletion of permanganate. Prior to analysis, approximately 150 mg of solid hydroxylamine sulfate is added and dissolved in the sample. The sample solution should remain clear after addition of hydroxylamine.

13.3.4 *Preparation of H_2O_2-HNO_3 Impinger Solution* (Container 4)—Adjust sample in a 250 mL volumetric flask to volume with water and mix. The sample is treated with a modified version of EPA SW 846 7470. Modifications to the method are necessary to properly treat the H_2O_2-containing impinger solution before doing the analysis with CVAAS. The modifications include 1) the addition of HCl, 2) the use of an ice bath during permanganate addition, and 3) the slow addition of permanganate. A 10-mL aliquot of the sample is transferred to a digestion tube with a screw cap. 0.25 mL HCl is added, and the tube is placed in an ice bath and allowed to cool for 15 minutes. The destruction of peroxide is accomplished by slow addition of permanganate. The violence of this reaction requires careful, slow addition of permanganate for safety reasons and to avoid loss of analyte. Saturated $KMnO_4$ solution is added in 0.25-mL increments along the inside of the digestion tube. The sample is allowed to cool for 15 minutes in between each addition, and the sample is mixed prior to each addition. After the first five additions, the increments may be increased to 0.5 mL. The addition of permanganate is carried out until the solution remains purple, indicating complete reaction of the peroxide. Record the volume of saturated potassium permanganate solution added to the sample. 0.75 mL 5% potassium persulfate ($K_2S_2O_8$) solution and cap the tube loosely. Place the tubes in a dry block heater or water bath equipped with a temperature probe and heat to 95° C. The temperature must not be allowed to exceed 95° C. Maintain the sample at 95° C for two hours before allowing it to cool to room temperature. Note that the purple color due to permanganate must remain throughout the digestion. Clearing of the solution during the heating indicates the depletion of permanganate. Before doing the analysis, add and dissolve approximately 150 mg of solid hydroxylamine sulfate. The sample solution should remain clear after addition of the hydroxylamine.

13.3.4.1 *Simplification of the Digestion*—It should be recognized that the persulfate digest, the addition of $K_2S_2O_8$ and heating, performed as part of the preparation method is for the purpose of oxidizing certain organics. Because this method is specific to coal combustion systems and therefore organic compounds are usually insignificant[8], this digest may be skipped since the H_2O_2 and the permanganate are sufficient to oxidize most compounds. The determination to skip this procedure should be made based on the gas stream being sampled and/or verification that organics resistant to H_2O_2 and permanganate oxidation are not present. If unsure whether organics are present, the total digestion procedure is required.

13.3.5 *Preparation of $KMnO_4$-H_2SO_4 Impinger Solution* (Container 5)—The sample is prepared immediately prior to analysis. Dissolve by incrementally adding approximately 500-mg of solid hydroxylamine sulfate into the sample until a clear, colorless solution persists. The hydroxylamine must be added slowly because of the violence of this reaction, dilute the sample in a 500-mL volumetric flask to volume with water, and mix. This procedure assumes that organics have been trapped in impingers previous to the permanganate impingers in the sampling train or oxidized by contact with the series of impingers in the sampling train. Treatment of the sample as outlined allows an aliquot to be taken for analysis which is representative of the entire impinger contents.

13.4 *Sample Analysis*—All of the prepared solutions are analyzed by CVAAS or CVAFS.

13.4.1 *QA/QC*—General guidelines for quality assurance (QA) and quality control should be followed. For QC, it is recommended that a triplicate and spike be analyzed every ten samples. For the ash, it is recommended that a certified reference material be analyzed for QA.

14. Calculations

14.1 *Dry Gas Volume*—Calculate the dry gas sample volume, $V_{m(std)}$, at standard conditions using Eq 1.

$$V_{m(std)} = V_m Y \left(\frac{T_{std}}{T_m}\right)\left[\frac{P_{bar} + \frac{\Delta H}{13.6}}{P_{std}}\right] = K_1 V_m Y \frac{P_{bar} + (\Delta H/13.6)}{T_m} \qquad \text{[Eq. 1]}$$

[8] "A Comprehensive Assessment of Toxic Emissions from Coal-Fired Power Plants: Phase I Results from The U.S. Department of Energy Study" Prepared for the U.S. Department of Energy Federal Energy Technology Center, Contract No. DE-FC21-93MC30097 Energy & Environmental Research Center, University of North Dakota, Grand Forks, ND, 1996.

where:

P_{bar} = barometric pressure at the sampling site, mm Hg (in. Hg)
P_{std} = standard absolute pressure, 760 mm Hg (29.92 in. Hg)
T_m = absolute average dry gas meter temperature (refer to Figure 2), K (°R)
T_{std} = standard absolute temperature, 293 K (528°R)
V_m = volume of gas sample as measured by dry gas meter, dcm (dscf)
$V_{m(std)}$ = volume of gas sample measured by the dry gas meter, corrected to standard conditions, dscm (dscf)
Y = dry gas meter calibration factor
ΔH = average pressure differential across the orifice meter (refer to Figure 2), mm H_2O (in. H_2O)
K_1 = 0.3858 K/mm Hg (17.64°R/in. Hg).

Note: Eq. 1 can be used as written unless the leakage rate observed during any of the mandatory leak checks (i.e., the posttest leak check or leak checks conducted prior to component changes) exceeds the maximum acceptable leakage rate, L_a, for either a pretest leak check or for a leak check following a component change—equal to 0.00057 m^3/min (0.02 cfm) or 4% of the average sampling rate, whichever is less. If the leakage rate observed during the posttest leak check, L_p, or an individual leakage rate observed during the leak check conducted prior to the "ith" component change (i = 1, 2, 3, ...n), L_i, exceeds L_a, then the above equation must be modified as follows:

(a) Case I. No component changes made during sampling run. In this case, replace V_m with the expression:

$$[V_m - (L_p - L_a)\theta]$$

where:

L_p = leakage rate observed during the posttest leak check, m^3/min (cfm)
L_a = maximum acceptable leakage rate for either a pretest leak check or for a leak check following a component change—equal to 0.00057 m^3/min (0.02 cfm) or 4% of the average sampling rate, whichever is less
θ = total sampling time, min.

(b) Case II. One or more component changes made during the sampling run. In this case, replace V_m with the expression:

$$\left[V_m - (L_1 - L_a)\theta_1 - \sum_{i=1}^{n} (L_1 - L_a)\theta_1 - (L_p - L_a)\theta_1 \right]$$

where:

θ_1 = sampling time interval, from the beginning of a run until the first component change, min.

and substitute only for those leakage rates (L_i or L_p) that exceed L_a.

14.2 *Volume of Water Vapor*—Calculate the volume of water vapor of the stack gas using Eq. 2.

$$V_{w(std)} = \frac{W_{lc}\ R\ T_{std}}{M_w\ P_{std}} = K_2\ W_{lc} \qquad \text{[Eq. 2]}$$

$$v_s = K_p C_p \left(\sqrt{\Delta p}\right)_{avg} \sqrt{\frac{T_{s(avg)}}{P_s M_s}} \qquad \text{[Eq. 4]}$$

where:

M_w = molecular weight of water, 18.0 g/g-mole (18.0 lb/lb-mole)
R = ideal gas constant, 0.06236 mm Hg-m^3/K-g-mole (21.85 in. Hg-ft^3/°R-lb-mole)
W_{lc} = total weight of liquid collected in impingers and silica gel (refer to Figure 2), g
$V_{w(std)}$ = volume of water vapor in the gas sample, corrected to standard conditions, scm (scf)
K_2 = 0.001336 m^3/mL (0.04707 ft^3/mL).

14.3 *Volume of Moisture*—Calculate the moisture content, B_{ws}, of the stack gas using Eq. 3.

where:

B_{ws} = water vapor in the gas stream, proportion by volume.

14.4 *Stack Gas Velocity*—Calculate the average stack gas velocity using Eq. 4:

where:

v_s = average stack gas velocity, m/sec (ft/sec)
T_s = absolute stack temperature, K (°R)
P_s = absolute stack gas pressure, mm Hg (in. Hg)
M_s = molecular weight of stack gas, wet basis, g/g-mole (lb/lb-mole).
C_p = pitot tube coefficient, dimensionless
Δp = velocity head of stack gas, mm H_2O (in. H_2O)
K_p = pitot tube constant

$$K_p = 34.97\ \frac{m}{\sec}\left[\frac{(g/g\text{-}mole)\ (mmHg)}{(K)\ (mm\ H_2O)}\right]^{1/2}$$

for the metric system and

$$B_{ws} = \frac{V_{w(std)}}{V_{m(std)} + V_{w(std)}} \qquad \text{[Eq. 3]}$$

$$K_p = 85.49 \frac{ft}{sec} \left[\frac{(lb/lb\text{-}mole)\ (in.\ Hg)}{(°R)\ (in.\ H_2O)} \right]^{1/2}$$

for the English system.

14.5 *Stack Gas Dry Volumetric Flow Rate*—Calculate the average stack gas dry volumetric flow rate, Q_{sd}, using Eq. 5.

$$Q_{sd} = 3600(1 - B_{ws})v_s A \left(\frac{T_{std}}{T_{s(avg)}} \right) \left(\frac{P_s}{P_{std}} \right) \qquad \text{[Eq. 5]}$$

where:

A = cross-sectional area of stack, $m^2(ft^2)$
T_{std} = standard absolute temperature, 293 K (528°R)
P_{std} = standard absolute pressure, 760 mm Hg (29.92 in. Hg).

To convert Q_{sd} from dscm/hr (dscf/hr) to dscm/min (dscf/min), divide Q_{sd} by 60.

14.6 *Elemental, Oxidized, Particle-bound, and Total Mercury Concentrations in Source Sample*:

14.6.1 Calculate the concentration of mercury in ppm (μg/g) in the ash sample as follows:

$$\text{Mercury, ppm} = I(DF)$$

where:

I = instrument reading, μg/L
DF = dilution factor = (digestion volume, 0.1 L)/(mass of ash digested, ≈0.5 g) = 0.2.

14.6.2 Calculate the concentration of mercury in ppb (μg/L) in the analysis of the potassium chloride sample as follows:

$$\text{Mercury, ppb } (\mu g/L) = I(DF)$$

where:

$$DF = \text{dilution factor} = \frac{10.0\text{ mL} + 0.5\text{ mL} + 0.25\text{ mL} + 1.5\text{ mL} + 0.75\text{ mL}}{10.0\text{ mL}} = 1.3$$

14.6.3 Calculate the concentration of mercury in ppb (μg/L) in the analysis of the hydrogen peroxide–nitric acid sample as follows:

$$\text{Mercury, ppb } (\mu g/L) = I(DF)$$

where:

DF = dilution factor = $\frac{5.0\ mL + 0.25\ mL + V_{KMnO4}}{5.0\ mL}$

where:

V_{KMnO4} = volume of $KMnO_4$ solution added.

14.7 *Elemental, Oxidized, Particle-bound, and Total Mercury in Source Sample:*

14.7.1 Calculate the amount of particle-bound mercury using Eq. 6:

$$Hg_p = \frac{Q_p}{V_1}(V_{soln.1}) - Hg_{fb} \qquad \text{[Eq. 6]}$$

where:

Hg_p = Total mass of mercury collected in the probe and on the filter of the sampling train, μg

Q_p = Quantity of mercury, μg, TOTAL in the ALIQUOT selected for digestion and analysis. Note: For example, if a 10-mL aliquot of the filter and probe rinse digest is taken, digested, and analyzed (according to Sections 13.3.2 and 13.4), then calculate and use the total amount of mercury in the 10-mL aliquot for Q_p.

$V_{soln.1}$ = Total volume of ash and probe rinse digest, mL

V_1 = Volume of aliquot of ash and probe rinse digest analyzed, mL. Note: For example, if a 1-mL aliquot of the ash and probe rinse digest was diluted to 50 mL with 0.15% HNO_3 to bring it into the proper analytical range and then 1 mL of that 50 mL was analyzed, V_1 would be 0.02 mL

Hg_{fb} = Blank correction value for mass of mercury detected on the filter field blank and blank 0.1 N HNO_3, μg.

14.7.2 Calculate the amount of oxidized mercury using Eq. 7:

$$Hg_O = \frac{Q_O}{V_2}(V_{soln.2}) - Hg_{Ob} \qquad \text{[Eq. 7]}$$

where:

Hg_O = Total mass of mercury collected in the aqueous KCl absorption solution of Impingers 1 through 3, μg

Q_O = Quantity of mercury, μg, TOTAL in the ALIQUOT of aqueous KCl solution selected for digestion and analysis. Note: For example, if a 10-mL aliquot is taken, digested, and analyzed (according to Sections 13.3.3 and 13.4), then calculate and use the total amount of mercury in the 10-mL aliquot for Q_O.

$V_{soln.2}$ = Total volume of aqueous KCl solution in Impingers 1 through 3, mL.

V_2 = Volume of aqueous KCl solution analyzed, mL. Note: For example, if 1 mL of KCl solution was diluted to 10 mL with 0.15% HNO_3 to bring it into the proper analytical range and then 5 mL of that 10-mL was analyzed, V_2 would be 0.5 mL.

Hg_{Ob} = Blank correction value for mass of mercury detected in the aqueous KCl field reagent blank, μg.

14.7.3 Calculate the amount of elemental mercury using Eq. 8:

$$Hg_E = \frac{Q_E}{V_3}(V_{soln.3}) - Hg_{Eb} \qquad \text{[Eq. 8]}$$

where:

Hg_E = Total mass of mercury collected in the H_2O_2-HNO_3 and $KMnO_4$-H_2SO_4 solutions of Impingers 4 and 5 through 7, respectively, μg.

Q_E = Quantity of mercury, μg, TOTAL in the ALIQUOT of the H_2O_2-HNO_3 and $KMnO_4$-H_2SO_4 solution selected for digestion and analysis (see previous notes in Sections 14.7.1 and 14.7.2 describing the quantity "Q," and calculate similarly)

$V_{soln.3}$ = Total volume of H_2O_2-HNO_3 and $KMnO_4$-H_2SO_4 solutions of Impingers 4 and 5 through 7.

V_3 = Volume of H_2O_2-HNO_3 and $KMnO_4$-H_2SO_4 solution analyzed, mL (see previous notes in Sections 14.6.1 and 14.6.2, describing the quantity "V," and calculate similarly)

Hg_{Eb} = Blank correction value for mass of mercury detected in the acidified peroxide and potassium permanganate field reagent blanks, μg.

14.7.4 Calculate the total amount of mercury collected in the sampling train using Eq. 9:

$$Hg_t = Hg_p + Hg_O + Hg_E \qquad \text{[Eq. 9]}$$

where:

Hg_t = Total mass of mercury collected in the sampling train, μg.

14.7.5 Calculate the concentration of particle-bound, oxidized, elemental, and total mercury in the stack gas (dry basis, adjusted to standard conditions) by using Eq. 10:

$$C_{p,O,E,t} = \frac{K_4\ Hg_{p,O,E,t}}{V_{m(std)}} \qquad \text{[Eq. 10]}$$

where:

$C_{p,O,E,t}$ = Concentration of particle-bound, oxidized, elemental, or total mercury in the flue gas, mg/dscm

K_4 = 10^{-3} mg/μg

$Hg_{p,O,E,t}$ = Mass of particle-bound, oxidized, elemental, or total mercury collected in the sampling train, μg

$V_{m(std)}$ = Volume of gas sample as measured by the dry gas meter, corrected to dry standard conditions, dscm.

14.8 *Isokinetic Variation*—Calculate the variation from isokinetic sampling rate, I, from raw data using Eq. 11.

$$I = \frac{100\ T_s[K_3 V'_{lc} + (V'_m Y/T_m)(P_{bar} + \Delta H/13.6)]}{60\theta v_s P_s A_n} \qquad \text{[Eq. 11]}$$

where:

K_3 = 0.003454 mm Hg-m^3/mL-K (0.002669 in. Hg-ft^3/mL-°R).

or from intermediate values using Eq. 12.

$$I = \frac{100 T_s V'_{m(std)} P_{std}}{60 T_{std} v_s \theta A_n P_s (1 - B_{ws})} = \frac{K_4 T_s V_{m(std)}}{P_s v_s A_n \theta (1 - B_{ws})} \qquad \text{[Eq. 12]}$$

where:

K_4 = 4.320 for metric units, (0.09450 for English units).

14.8.1 *Acceptable Results*—If 90% ≤ I ≤ 110%, then the results are acceptable. If I is unacceptable, reject the particle-bound results, and repeat the test.

15. Precision and Bias

15.1 *Precision*

15.1.1 Formal evaluation of the Ontario Hydro method was completed with dynamic spiking of Hg^0 and $HgCl_2$ into the flue gas stream[9]. The results are shown in Table 1. As is indicated in the table the relative standard deviation for gaseous elemental mercury and oxidized mercury to be <11% for mercury concentrations >3 μg/Nm^3 and <34% for mercury concentrations <3 μg/Nm^3. In all cases the laboratory bias for these tests based on a calculated correction factor was not statistically significant. These values were within the acceptable range, based on the criteria established in EPA Method 301 (%RSD <50%).

15.1.2 The precision of particle-bound, oxidized, and elemental mercury sampling method data is influenced by many factors. These include flue gas concentration, source, procedural, and equipment variables. Strict adherence to the method is necessary to reduce the effect of these variables. Failure to assure a leak-free system, failure to accurately calibrate all indicated system components, failure to select a proper sampling location, failure to thoroughly clean all glassware, and failure to follow prescribed sample recovery, preparation, and analysis procedures can, for example, seriously affect the precision of the results.

Table 1
Results from Formal EPA Method 301 Evaluation Tests for the Ontario Hydro Method*

Ontario Hdyro Method**	Total Vapor-Phase Mercury			Oxidized Mercury			Elemental Mercury		
	Mean, $\mu g/Nm^3$	Std. Dev	RSD, %	Mean, $\mu g/Nm^3$	Std. Dev	RSD, %	Mean, $\mu g/Nm^3$	Std. Dev	RSD, %
Baseline	23.35	2.05	8.79	21.24	2.13	10.02	2.11	0.65	30.69
Hg^o Spike (15.0 $\mu g/Nm^3$)	38.89	2.00	5.13	23.32	2.08	8.94	15.57	1.09	6.97
$HgCl_2$ Spike (19.9 $\mu g/Nm^3$)	42.88	2.67	6.23	40.22	2.87	7.14	2.66	0.89	33.31

*For each mean result, there were 12 replicate samples (4 quadtrains)
**The correction factor in all cases was not statically significant and is not shown.

15.2 *Bias*

15.2.1 Gaseous mercury species in flue gases that are capable of interacting with fly ash particles collected in the front-half of the sampling train can produce a positive particle-bound mercury bias.

15.2.2 Particle-bound mercury existing in the flue gas may vaporize after collection in the front-half of the sampling train because of continued exposure to the flue gas sample stream and reduced pressures during the sampling period. Such vaporization would result in a negative particle-bound mercury bias.

16. Keywords

16.1 Air toxics, mercury, sampling, speciation.

DRAFT

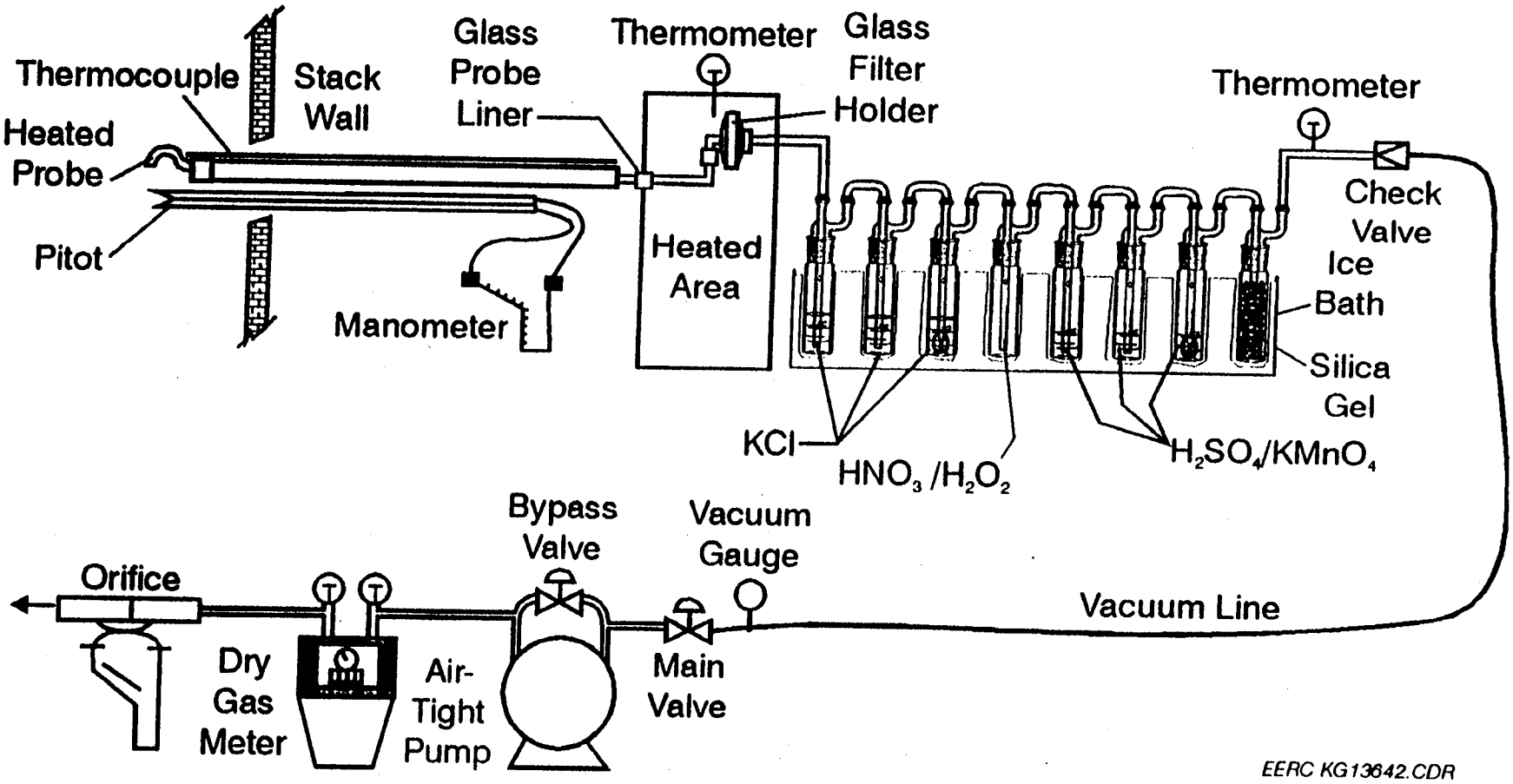

Figure 1. Schematic of Mercury Sampling Train.

Ontario Hydro Method

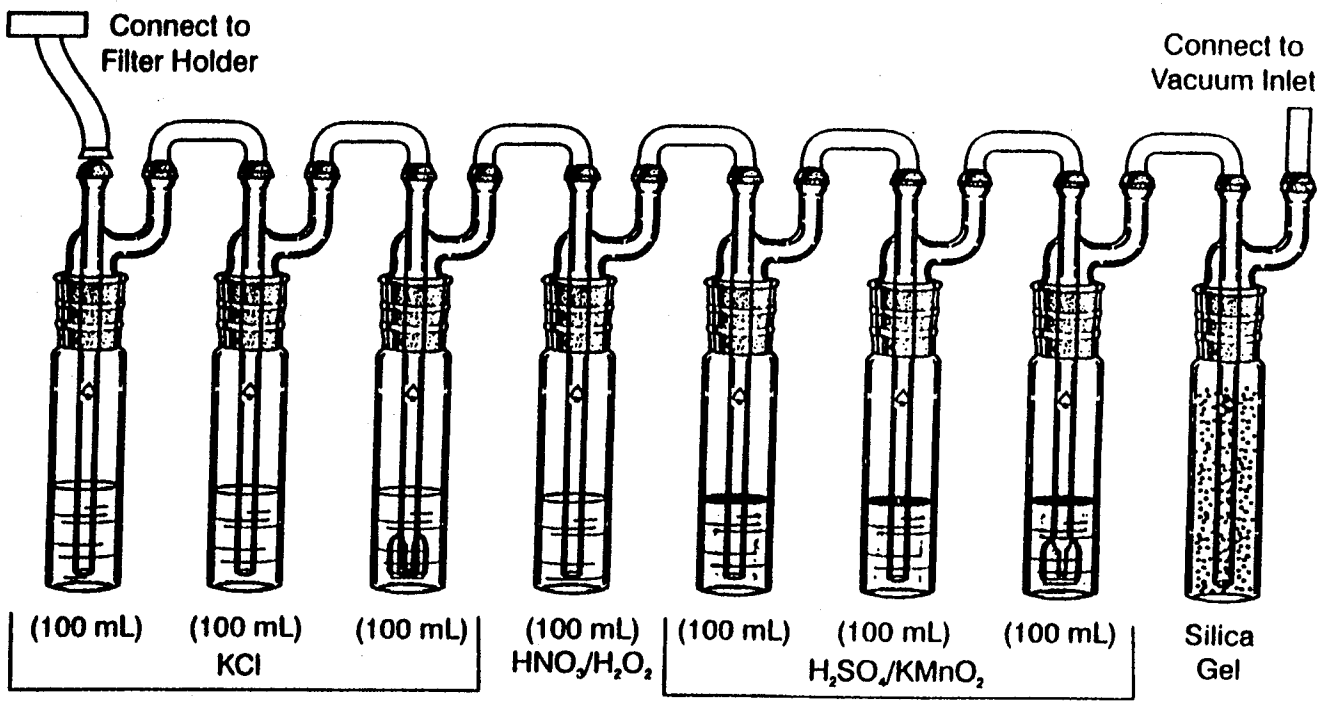

DRAFT

1. Rinse filter holder and connector with 0.1N HNO_3.
2. Add $H_2SO_4/KMnO_4$ to each impinger bottle until purple color remains.
3. Rinse with 0.1N HNO_3.
4. Rinse with 8N HCl if brown residue remains.
5. Final rinse with 0.1N HNO_3.

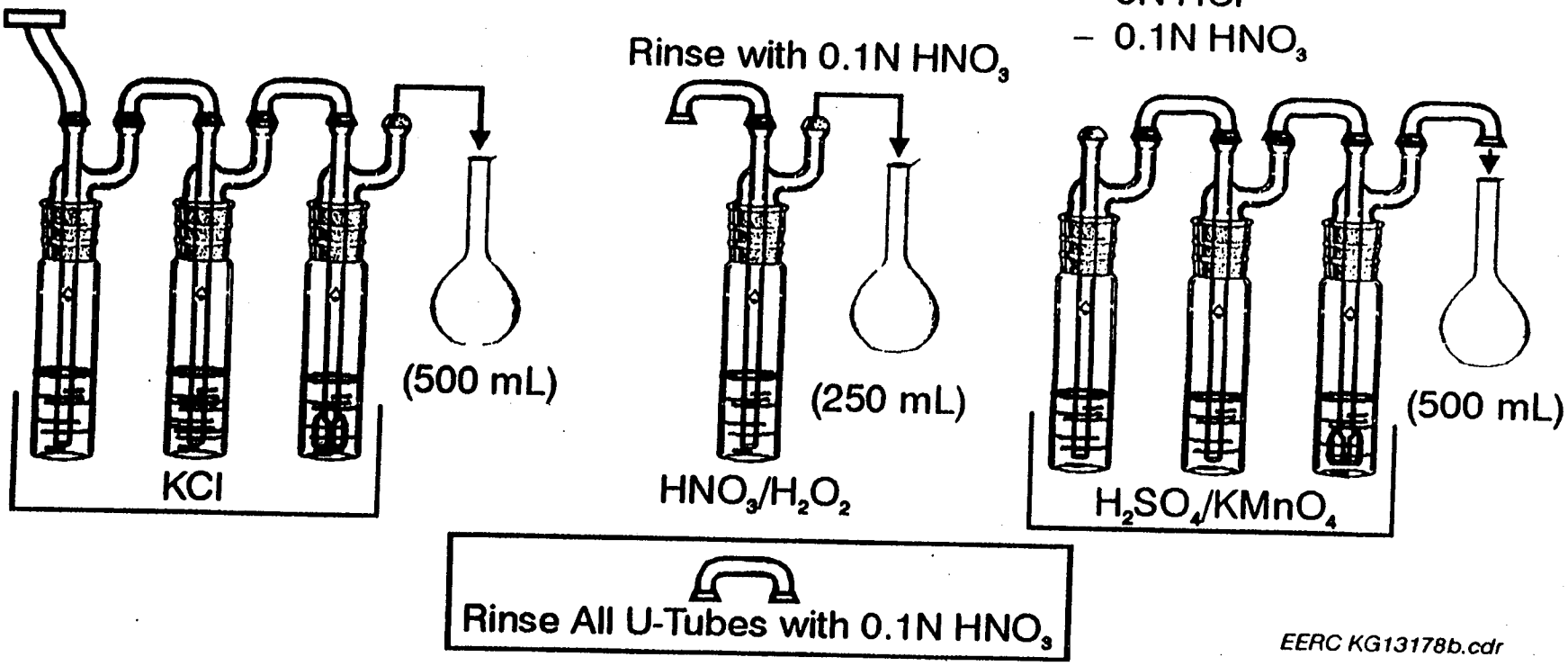

Fig. 3 Sample Recovery Scheme for the Mercury Sampling Train.

DRAFT

Plant.....

Location.....

Operator.....

Date.....

Run No.....

Sample Box No.....

Meter Box No.....

Meter ΔH@.....

C factor.....

Pitot tube coefficient, Cp.....

Schematic of Stack Cross Section

Ambient Temperature .....

Barometric Pressure .....

Assumed Moisture, % .....

Probe Length, m(ft) .....

Nozzle Identification No. .....

Average Calibrated Nozzle Diameter, cm (in.) .....

Probe Heater Setting .....

Leak Rate, m^3/min (cfm) .....

Static Pressure, mm Hg (in. Hg) .....

Filter No. .....

Traverse point number	Sampling time min	Vacuum mm Hg (in. Hg)	Stack temp. (T_s), °C, (°F)	Velocity head (ΔP_s) mm H_2O (in. H_2O)	Pressure differential across mm H_2O (in H_2O)	Gas Sample volume m^3 (ft^3)	Gas Sample Temp. at dry gas meter		Filter exit temp. °C (°F)	Probe exit temp. °C (°F)	Final impinger exit °C (°F)
							Inlet °C (°F)	Outlet °C (°F)			
Total											
Average											

Figure 2. Mercury Sampling Field Data Report

REFERENCES

(1) Method 303F in *Standard Methods for the Examination of Water Wastewater*, 15th Edition, 1980. Available from the American Public Health Association, 1015 18th Street N.W., Washington, D.C. 20036.

(2) EPA Methods 6010, 6020, 7000, 7041, 7060, 7131, 7421, 7470, 7740, and 7841, *Test Methods for Evaluating Solid Waste: Physical/Chemical Methods*. SW-846, Third Edition. September 1988. Office of Solid Waste and Emergency Response, U. S. Environmental Protection Agency, Washington, D.C. 20460.

(3) EPA Methods 1 through 5, *Code of Federal Regulations*, Title 40, Part 60, Appendix A, July 1, 1991.

(4) EPA Method 101A, *Code of Federal Regulations*, Title 40, Part 61, Appendix B, July 1, 1991.

(5) EPA Method 29, *Emission Measurement Technical Information Center*, EMTIC TM-029, April 25, 1996.

(6) U.S. Environmental Protection Agency "Method 301 - Field Validation of Pollutant Measurement Method from Various Waste Media," In: *Code of Federal Regulations, title 40, parts 61 to 80.* Washington, DC, USA, Office of the Federal Register, part 63, appendix A, pp. 324-331, July 1993.

Mercury by Cold Vapor AA

Standard _x_ Non-Standard __

LM Approval _____
TD Approval _____

References: **SW-846 Third Edition, Final Update II, September 1994**, Chapter 3, "Metallic Analytes", Method 7470A, "Mercury in Liquid Waste (Manual Cold-Vapor Technique)." Method 7471A, "Mercury in Solid or Semisolid Waste (Manual Cold-Vapor Technique)." **SW-846 Third Edition, Final Update I, July 1992**, Method 7000A "Atomic Absorption methods." **Methods for Determination of Metals in Environmental Samples, EPA/600/R-94/111, May 1994**, Method 245.1. **40 CFR Part 266 Appendix IX**, "Methodology for Determination of Metals Emissions in Exhaust Gases from Hazardous Waste Incinerators and Similar Combustion Processes."

Radian SOP AL/SOP065.

Applicability: Use of cold-vapor atomic absorption spectroscopy for determining the concentrations of mercury in aqueous wastes, groundwaters, soils, sediments, sludge (including mobility extracts), bottom deposits, filter materials and multimetals trains. All samples must be digested prior to analysis.

Deviations/ Clarifications:

1. When preparing solid samples for analysis, triplicate 0.2-g portions are not weighed out but rather a single 0.5 - 1.0 g aliquot of the sample. According to the technical representative on the EPA MICE line, this satisfies the intent of the method (to collect a homogeneous sample) and is what is expected to be published in SW-846 Update IV.

2. Prior to analysis of solid samples for mercury by Method 7471A, the samples are digested with nitric and sulfuric acids. This is consistent with the alternate digestion procedure in Section 7.2.

3. A 50-mL aliquot of sample is used for analysis of aqueous samples rather than a 100 mL aliquot. Prior to the digestion of soil samples, 50 mL of deionized water are added to the sample.

4. All aqueous and solid samples are heated in an oven at 95°C for two hours rather than a water bath or an autoclave.

5. The concentration of the hydroxylamine solution used is twice that recommended in the method and serves to make the reduction of potassium permanganate more efficient.

6. When analyzing TCLP extracts, SW-846 Method 1311 specifies the corrective action of method of standard addition (MSA) if: a) the concentration of a metallic contaminant is within 20% of the appropriate regulatory level, and b) recovery of the contaminant from TCLP extract is <50% and does not exceed the regulatory level. Radian's laboratory does not routinely analyze mercury by MSA as a corrective action for either scenario.

7. Deviations to this Protocol Specification when analyzing samples by Method 245.1, "Determination of Mercury in Water by Cold Vapor Atomic Absorbance Spectroscopy" are as follows:

   a. See Numbers 3, 4, 5, and 6 above.
   b. Radian's tolerance for the initial calibration verification is ±10%.
   c. The calibration range suggested in Method 245.1 is 0.0005 - 0.010 µg/L. Instruments are routinely calibrated from 0.0005 - 0.020 mg/L (see Table 6 for standard concentrations).

8. A more rigorous digestion procedure is used for aqueous samples with the addition of 5 mL H_2SO_4 and 2 mL of HNO_3 for a 50 mL aliquot of sample rather than volumes recommended in the method.

A. Technical Specifications

1. Target Analytes: See Table 1.

2. Precision:

   a. Precision Measure 1: Duplicate LCS Precision

Units:	%
Tolerance:	See Table 2
Applicable Value:	See Table 7
Measured By:	Agreement (RPD) between duplicate LCS/LCSD

b. Precision Measure 2: Duplicate MS Precision

Units:	%
Tolerance:	See Table 2
Applicable Value:	See Table 7
Measured By:	Agreement (RPD) between MS/MSD

3. Accuracy:

a. Accuracy Measure 1: LCS Recovery

Units:	%
Tolerance:	See Table 2
Applicable Value:	See Table 7
Measured By:	Recovery for LCS/LCSD

b. Accuracy Measure 2: MS Recovery

Units:	%
Tolerance:	See Table 2
Applicable Value:	See Table 7
Measured By:	Recovery for MS/MSD

4. Detection Limits and Reporting Limits:

a. See Table 1 for PRDLs, and Protocol Specification Section C.1 for definition.

5. Holding Times and Turnaround Time:

a. Preparation: Within 28 days of sample collection

b. Analysis: Within 28 days of sample collection, including preparation

c. Reporting: Within 14 days of sample receipt for routine samples.

B. Procedural Specifications

1. Demonstration of Capability (DOC):

An initial DOC, consisting of analyses of four LCS solutions, must be performed for each new instrument, and by a new analyst prior to analysis of samples by the method. This will be documented in a training record.

The average recovery for the Demonstration of Capability must meet the DOC and s tolerances in Table 5. If the results fail to meet either the recovery or precision limits, the DOC must be repeated.

For on-going Demonstration of Capability, control charts of laboratory control samples will be generated on a semiannual basis for each analyst performing the analytical method and for each instrument. If 25 of the last 30 points are not within statistical control, the analyst's technique will be evaluated and a DOC, as described above, will be performed. On-going DOCs for preparation analysts will be performed annually using four LCS solutions. Tolerances in Table 5 must be met or the DOC will be repeated.

2. Statistical Control:

a. Recovery: All results must be generated by an analytical system for which recovery is in statistical control. Statistical control must be demonstrated on a real-time basis by instrument-specific control charts (x) for LCS results for mercury.

b. Precision: All results must be generated by an analytical system for which duplicate precision is in statistical control. Statistical control must be demonstrated on a real-time basis by instrument-specific range (RPD) control charts (x) for duplicate LCS results for mercury.

3. Method Detection Limits:

Annually, the method detection limit for each instrument must be determined and documented to be less than or equal to the Protocol Required Detection Limit (PRDL). The Method Detection Limit (MDL) study will be performed following 40 CFR Part 136, Appendix B, with at least 7 replicates.

4. Calibration and Quality Control Analyses and Criteria:

a. Calibration Analyses: Calibration standards are analyzed beginning with the blank and proceeding to the highest standard. Linear

regression is used to define the calibration curve. The regression line is constructed using concentration as the abscissa and mean response as the ordinate. The blank is included as X=0. The correlation coefficient of the standard curve must be ≥0.995 for analyses to proceed. The calculated intercept value must be between 0.001 and -0.001 absorbance units.

b. Quality Control Analyses: See Table 3.

c. Documentation Requirements

All original calibration and quality control documentation is filed in Document Control.

1) Initial Calibration: Data showing full calibration results.

2) Demonstration of Capability: Results for four analyses with test concentration, calculated % recoveries. DOC data are filed in Document Control.

3) LCS/LCSD: Summary form showing percent recovery and RPDs.

4) Continuing Calibration Check: Summary form showing calculated concentration and percent recovery.

5) MS/MSD: Summary form showing calculated concentration, percent recovery, and RPDs.

6) Method Blank: Summary form showing measured blank concentrations.

7) Other documentation includes instrument printouts, electronic files from instruments, EBS printouts, instrument run logs, digestion logs, and standards logs.

8) Quality Control Exception Report (QCER) - when any quality specifications (i.e., tolerances) are not met.

9) Quality Traveler (QT)

5. Sample Preparation, Custody and Handling:

a. Sample Receipt:

1) Aqueous:

An acidified sample (nitric acid, pH<2) in clean 500-mL* plastic bottles. Note that unfiltered samples give "total metals," while filtered samples give "dissolved metals." If determining dissolved metals, filtration and immediate preservation in the field are recommended. Recommended minimum volume is 500 mL for Hg analysis.

* If GFAAS and ICPES are to be performed on the same sample, the recommended minimum volume is 1000 mL.

2) Solids/Waste:

Clean, 500-mL glass jars. Recommended minimum sample amount is 50 g.

3) Filters:

Plastic or glass containers, or filter assemblies.

4) Impinger solutions (HNO_3/H_2O_2 or $KMnO_4$) and rinses from multi-metals train (HCl or HNO_3):

Clean, 500-mL glass bottle.

b. Sample Preparation:

1) Aqueous Samples and Mobility Extracts

Aqueous samples and mobility extracts are prepared using SW-846 Method 7470A (see deviations section of this Protocol Specification).

2) Solids/Wastes

Solid/waste samples are digested by SW-846 Method 7471A (see deviations section of this Protocol Specification).

3) Multi-Metals Trains

Multi-metals trains are digested following 40 CFR Part 266 Appendix IX. (Deviations to this method are not addressed in the Protocol Specification but will be addressed in the multi-metals train SOP.)

c. Preservation Conditions: Aqueous samples are routinely preserved in the field by acidification to pH <2 using nitric acid. Solid and liquid samples are shipped at 4 ± 2 °C.

d. Sample Storage Conditions: Solid and aqueous samples are refrigerated at 1° - 4.4°C. All digestates are stored at ambient temperatures.

e. Documentation Requirements:

1) Chain-of-custody form and addendum documentation of date/time of receipt, receiver, temperature on receipt and pH of each sample except impingers.

2) Refrigerator logs with storage, removal, and consumed or returned notation.

3) Custody log noting possession and disposition of samples.

4) Sample preparation logbooks showing all pertinent digestion information.

5) Quality Control Exception Report (QCER), if needed.

6) Quality Traveler (QT).

6. Sample Processing:

a. Sample Preparation: Samples are extracted in a preparation batch consisting of no more than 20 field samples of the same matrix set

up together with common quality control samples (LCS/LCSD, MS/MSD, method blank). See definitions (C.1).

b. Sample Analysis: Samples are analyzed in an analytical batch

consisting of no more than 20 field samples analyzed together on the same instrument with the same calibration during a single 24-hour period. If samples of different matrices are mixed in the analytical batch, then the supporting matrix-specific QC (LCS/LCSD, MS/MSD, method blank) for both matrices must be included in the analytical batch. See definitions (C.1).

c. Analytical Sequence: The analytical sequence is the analytical batch and its associated QC; the standard analytical sequence is shown in Table 4.

d. Documentation Requirements:

1) Preparation log

2) Instrument run log

3) LCS control charts showing real-time use.

4) Instrument hard copy of data (raw data)

5) Instrument electronic storage of data

6) Balance, pipet and thermometer calibration verification logs.

7) Reagent and standards logs documenting preparation and traceability of all reagents and standards.

8) Quality Control Exception Report (QCER) required for all QC results outside tolerances and for other client specifications that are not met.

9) Quality Traveler (QT).

10) Instrument maintenance log.

7. Calculations/Data Reduction:

a. Responsibilities:

1) Analyst - Responsible for: primary calculations (using appropriate software), editing of initial quantitative reports, calculation of percent recoveries and RPDs for comparison to applicable tolerances, verifying that results meet tolerances, comparison of QC results to acceptance limits, and compiling all data for peer review.

2) Peer Reviewer - Responsible for verifying that the analytical results met the Protocol Specification. Also responsible for delivering the raw data, QTs, and QCERs to Document Control for distribution of the final report.

b. Equations:

All calculations of analyte concentrations and quality control data are performed by the EBS software and Perkin Elmer (PE) AA-Hg software. The algorithm for calculating concentrations and quality control data is based on the linear relationship between the amount of mercury liberated from solution and atomic absorption over a finite range.

1) Calibration linear regression coefficient. This value is calculated using EBS software and printed out from EBS. Initial bench calculations are done using PE software.

$$x = \frac{a - b}{m}$$

where:

a = area counts for analyte to be measured
m = slope
x = concentration
b = intercept

2) Relative percent difference (RPD) for replicate analyses used to determine precision is calculated:

$$RPD = 100 \frac{|x - y|}{\left(\frac{x + y}{2}\right)}$$

where:

x = analytical result
y = replicate result

3) Percent recovery for analyses involving spikes is calculated:

$$\% \text{ Recovery (spikes)} = 100\left[\frac{SSR - SR}{SA}\right]$$

where:

SSR = spiked sample result
SR = sample result
SA = spiked added

4) Percent recovery for LCS is calculated:

$$\% \text{ Recovery (LCS)} = 100\left[\frac{E}{C}\right]$$

where:

E = obtained (experimental) value

C = theoretical value

5) Final concentration of a water sample:

$$\text{concentration(mg/L)} = (ir)\left(\frac{v_1}{v_2}\right)(df)$$

where:

ir = instrument result (mg/L)
df = dilution factor
v_1 = final digestate volume (mL)

v_2 = initial volume digested (mL)

6) Final concentration of a solid sample (on a dry weight basis):

$$\text{concentration (mg/kg)} = (ir)\left(\frac{v_1}{w_2}\right)\left(\frac{u}{1-m}\right)$$

where:

ir = instrument result (mg/L)
v_1 = final digestate volume
w_2 = weight of sample (g)
u = conversion factor for units calculation

$$\left(\frac{1L}{1000mL} x \frac{1000g}{1kg}\right)$$

m = moisture (i.e., 6% moisture should be .06)
To report "as received" do not use m.

7) Final concentration of impinger sample:

$$\text{concentration } (\mu g) = (ir)\ v_1\left(\frac{v_3}{v_4}\right)$$

where:

ir = instrument result (mg/L or µg/mL)
v_1 = final digestate volume (mL)
v_3 = total impinger volume (mL)
v_4 = total volume digested (mL) (after Hg aliquot removed)

8) Final concentration of filter sample:

$$\text{concentration } (\mu g) = (ir)\ v_1$$

where:

ir = instrument result (mg/L or µg/mL)
v_1 = final digestate volume (mL)

c. Hardware/Software: Perkin-Elmer software supplied with the

Model 4100 AAS, or Model 5100 GFAAS, Perkin-Elmer automated Flow Injection Analysis System (FIAS AS 90), and custom software (EBS) are used.

d. Documentation:

1) Instrument printouts

2) EBS printouts

3) Instrument run logs

4) Digestion preparation logs

5) Electronic files

8. Reporting/Deliverables:

a. Hard Copy: Data packets organized by analytical batch; includes results by sample, along with sample and batch QC documentation. The organization and definitions used in the report are discussed in "Guide to FPAS Reporting Format."

b. Electronic: Flat ASCII files containing results keyed to analytical batch are relayed to project team via electronic media. Detailed specifications and examples are available upon request.

C. Operational Specifications

1. Definitions:

a. Analytical Batch - A group of no more than 20 field samples analyzed together on the same instrument using the same calibration during a single 24-hour period along with the associated matrix-specific QC.

b. Analytical Spike - An analyte spike added to a portion of a prepared sample or its dilution.

c. Detection Limit - Detection limit is a generic term; the laboratory uses three types of detection limits. Protocol Required Detection

Limits (PRDL) define performance standards and are listed in Table 1. Method Detection Limits (MDL) are instrument-specific performance data that are experimentally determined annually according to the procedure described in 40 CFR Part 136 Appendix B using at least seven replicates. Sample-specific Detection Limits are calculated values obtained by multiplying the MDL by any dilution factors, concentration factors, or percent moisture for that sample and are reported with each analytical result.

d. Laboratory Control Sample/Laboratory Control Sample Duplicate (LCS/LCSD) - Two aliquots of laboratory pure water spiked with a second source standard (NIST) digested and analyzed together along with not more than 20 field samples using the same method, reagents, and apparatus.

e. Matrix Spike/Matrix Spike Duplicate (MS/MSD) - Two aliquots of a representative sample spiked with mercury, digested and analyzed together along with not more than 20 field samples using the same method, reagents, and apparatus.

f. Method Blank - Laboratory pure water digested and analyzed as a sample along with not more than 20 field samples using the same method, reagents, and apparatus.

g. Method Detection Limit (MDL) - An experimentally determined instrument-specific measure of method performance derived according to the procedure described in 40 CFR Part 136 Appendix B.

h. Preparation Batch - A group of no more than 20 field samples of the same matrix set up and prepared together using the same method, QC, reagents, and apparatus.

i. Protocol Required Detection Limit (PRDL) - This defines the performance standard for laboratory Method Detection Limits and the upper tolerance for method blanks and serves as the default Reporting Limit. All instrument-specific MDLs are required to be less than or equal to the associated PRDLs. PRDLs are established in the laboratory and are listed in Table 1.

j. Quality Control Exception Report (QCER) - A three-tiered

hierarchical system comprising forms and procedures used to identify and track problems which occur in the laboratory. The Level 1 QCER form is used to document problems which do not affect the quality of clients' data and to describe the corrective action(s) taken. For example, a Level 1 QCER form is completed for an unacceptable calibration standard that was remade prior to analyzing samples. The Level 2 QCER form is used to document problems which potentially affect the quality of clients' data, to propose the probable cause of the problems, and to describe corrective action(s) taken. Unacceptable matrix spike or surrogate recoveries attributed to a matrix effect would require completion of a Level 2 QCER form. The Level 3 QCER form is used to document systemic one-time or recurring problems which require high-level attention to correcting the problems and verification of resolution. For example, a Level 3 QCER form would be completed if a high concentration sample was mishandled resulting in contamination of other samples and a need for an approach to handling high concentration samples in the future.

k. Quality Traveler (QT) - A form that is used as a check list by the laboratory staff to document compliance with the Protocol Specification. The QT is reviewed by the Laboratory Manager and is the basis for certifying analytical reports.

l. Reporting Limit - This is the performance specification for reporting data for a specific project. The Reporting Limit is the concentration below which numerical data are not reported to the project. The default Reporting Limits are numerically equivalent to the PRDLs. A project team may establish alternative Reporting Limits for their project. The project team may choose Reporting Limits greater than, less than, or equal to the PRDLs depending on the analytical needs of their client.

m. Serial Dilution - The analysis of a 1:5 dilution. Assuming the concentration is greater than 5x PRDL this should meet ± 10% of the original determination. If not, a matrix effect should be assumed and an analytical spike will be run.

2. Instrumentation/Equipment:

a. Perkin-Elmer Model 5100ZL Zeeman Atomic Absorption

Spectrometer

b. Perkin-Elmer Model 4100ZL Zeeman Atomic Absorption Spectrometer

c. Perkin-Elmer Model AS 90 automated Flow Injection Analysis System (FIAS)

3. Training Requirements:

a. Technical Training Requirements

1) Introduction to Analytical Quality Control. This course is a one-time requirement.

2) Reading and understanding appropriate SOPs and methods (e.g., 7470A/7471A) for mercury digestion and analysis and hands-on training with an experienced analyst.

3) Demonstration of Capability (for new analysts before analysis of any field samples)

4) Completed Training Records signed off by trainer and Laboratory Manager.

b. Safety Training Requirements: As specified in the Radian Analytical Chemistry Safety Training Plan for Summit Park. The Metals Laboratory safety checklist must be read and understood by the analyst.

4. Data Review, Verification, and Certification:

a. Responsibilities:

1) Analyst: Responsible for initial data review and check of QC results against corresponding tolerances; responsible for

documenting QC results outside of tolerances in QCER; responsible for transferring data to EBS and ensuring that data are valid. Entering applicable data into QCPlot and evaluating data using control limits and trend rules.

2) Peer Reviewer: Responsible for verifying that the analytical

results met the Protocol Specification. Also responsible for delivering the raw data, QTs, and QCERs to Document Control for distribution of the final report.

3) Laboratory Manager: Responsible for report sign-offs certifying that analytical results met the Protocol Specification based on documentation provided by the Quality Traveler.

4) Document Control: Responsible for checking that all components of data package are present and complete; responsible for archiving raw data and final documents.

b. Documentation: Analyst's initials on instrument output and Quality Traveler; Peer Reviewer's initials on Quality Traveler; and Laboratory Manager's signature on final report.

c. Corrective Actions: Problems noted during data review process involving QC results out of limits are documented using QCERs.

5. Health and Safety:

a. Safety Requirements: All requirements listed in the Radian International "Health and Safety Manual" must be met.

b. Safety Precautions: Avoid contact with digested or preserved samples due to acid content. A fume hood will be used when digesting samples. Safety glasses will be worn in all designated areas.

6. Sample Disposal: Sample digestates should be disposed of immediately after analysis. Unused aqueous samples, standards, and drainage from the AA units are disposed of as bulk waste. Unused soil samples are disposed of according to prevailing requirements.

7. Data Archival: Electronic data from the instrument are archived onto diskettes using Perkin Elmer software. Hard copies of quantitation

reports and instrument printouts are archived by Document Control by work order numbers. Laboratory notebooks are also archived in Document Control.

Table 1. Protocol Required Detection Limits and Reporting Limits

Analyte	Aqueous	Solid	Microwave [b]	TCLP

	PRDL (mg/L)	Reporting Limit (mg/L)	PRDL (mg/kg) [a]	Reporting Limit (mg/kg) [a]	PRDL (mg/kg) [b]	Reporting Limit (mg/kg) [b]	PRDL (mg/L)	Reporting Limit (mg/L)
Mercury	0.00020	0.00020	0.020	0.020	0.20	0.20	0.0010	0.0010

[a] Nominal value. Solid digestion assumes 0.5 g (dry weight) sample digested with a final volume of 50 mL.
[b] Nominal value. Microwave digestion assumes a 0.1 g (dry weight) sample digested with a final volume of 100 mL.

Table 2. Accuracy and Precision Requirements

Analyte	LCS Tolerance (%)[a]		Matrix Spike Tolerance (%)		Analytical Spike Tolerance (%)
	Recovery	Precision (RPD)	Recovery[b]	Precision (RPD)[c]	Recovery
Mercury	82 - 123	<13	70-130	<25	85-115

[a] LCS tolerances statistically derived from historical data from Radian's Laboratory.
[b] Matrix spike accuracy tolerances are adopted from EPA Method 245.1 Matrix spike tolerances also used for media spikes and for analytical spikes when no sample is available for MS/MSD.
[c] As adopted from USACE EM 200-1-1.

Table 3. Summary of Calibration and QC Analyses

Calibration and QC Analyses	Description	Frequency	Acceptance Criteria	Corrective Action
Initial Calibration	A blank + 6-point calibration; for concentrations see Table 6	Daily before any other analysis	Correlation coefficient ≥0.995; calculated intercept = 0.000 ±0.001 absorbance units	Identify and reanalyze outlying point(s); recalculate curve using repeated points
Demonstration of Capability (DOC - Initial)	Quadruplicate analysis of LCS; for concentration see Table 7	For each new instrument and each new analyst prior to analyzing samples	1. Accuracy: See Table 5 for limits 2. Precision: See Table 5 for s limits	1. Accuracy: a. Verify calibration with 2nd source standard and repeat DOC b. If still out, repeat multipoint calibration 2. Precision: a. Repeat DOC b. If still out, identify and correct source of excess variability
Demonstration of Capability (DOC - on-going)	Control charts generated by instrument and by analyst	Semi-annually	25 of the last 30 points must be within statistical control. Control limits must be within LCS tolerances	1. Analyst technique will be evaluated 2. Analyze DOC as described above
Initial Calibration Verification (ICV)	Primary source calibration standard with final digestate concentration at 0.010 mg/L	Daily before batch one is analyzed	90-110% of true value	Accuracy: 1. Repeat calibration verification 2. If still out, identify and correct problem, run calibration verification again; if still out, recalibrate
Initial Calibration Blank (ICB)	Deionized water with digestion reagents	After initial calibration verification	Within ± PRDL	1. Reanalyze calibration blank 2. If still out, recalibrate
Method Blank	Deionized water with digestion reagents and analyzed as a sample	Once for each preparative and analytical batch	Measured concentrations must be <PRDL	Blank Contamination: 1. Reanalyze method blank; 2. If method blank is still contaminated, identify and correct source of contamination, then reprepare samples with new method blank

Table 3. (Continued)

Calibration and QC Analyses	Description	Frequency	Acceptance Criteria	Corrective Action
LCS/LCSD	Deionized water with digestion reagents, spiked with second source standard, and analyzed with samples For standard concentration, see Table 7	One LCS/LCSD pair for each preparative and analytical batch	1. Accuracy: See Table 2 LCS tolerances 2. Precision: See Table 2 LCS tolerances	1. Accuracy: Reanalyze LCS/LCSD. If recovery is still out, stop, identify, and correct problem before proceeding. If digestion batch is to be reprepared, write Level 1 QCER. If samples can't be redigested, contact CSC and write Level 2 QCER 2. Precision: Reanalyze LCS/LCSD. If recovery is still out, stop, identify, and correct problem before proceeding.

Table 3. (Continued)

Calibration and QC Analyses	Description	Frequency	Acceptance Criteria	Corrective Action
MS/MSD	Two aliquots of a native sample spiked with a standard solution. For concentration see Table 7	One MS/MSD pair for each preparative and analytical batch	1. Accuracy: See Table 2 MS tolerances 2. Precision: See Table 2 MS tolerances	1. Accuracy: a. If there is an assignable cause, and LCS/LCSD are within tolerance, flag data and contact CSC; write a Level 2 QCER b. If no assignable cause, run analytical spike c. If analytical spike fails, and LCS/LCSD results are within tolerance, flag MS/MSD results as matrix interference, write Level 2 QCER 2. Precision: a. If there is an assignable cause, and LCS/LCSD are within tolerance, flag data and contact CSC; write Level 2 QCER b. If there is no assignable cause, analyze analytical spike
Continuing Calibration Verification (CCV)	Primary source calibration standard with final digestate concentration at 0.010 mg/L	After 10th sample and at the end of each analytical batch	90-110% of true value	Accuracy: 1. Repeat calibration verification 2. If still out, identify and correct problem, then reanalyze all samples analyzed since last passing calibration verification
Continuing Calibration Blank (CCB)	Deionized water with digestion reagents	Following each continuing calibration verification and at the end of each analytical batch	Within ± PRDL	1. Reanalyze calibration blank 2. If still out, correct the problem and reanalyze all samples since last passing calibration blank
Serial Dilution	A five-fold (1+4) dilution of a sample digestate prior to analysis	Once per analytical batch	Within 10% of the undiluted value if parent sample is >5x PRDL	Perform analytical spike

Table 3. (Continued)

Calibration and QC Analyses	Description	Frequency	Acceptance Criteria	Corrective Action
Analytical Spike	Sample digestate spiked with a 0.020 mg/L calibration standard prior to analysis	1. When serial dilution fails or if parent sample <5x PRDL. 2. When MS/MSD fails without assignable cause.	85% - 115% recovery	1. Flag data 2. Contact CSC 3. Write Level 2 QCER

Table 4. Analytical Sequence

PART 1 CALIBRATION

STD0
STD1
STD2
STD3
STD4
STD5
STD6

PART 2 DAILY SEQUENCE QC

Initial Calibration Verification (ICV)

Initial Calibration Blank (ICB)

PART 3 BATCH 1

Method Blank
LCS
LCSD
Sample 1
Sample 1 Serial Dilution (if necessary) *
Sample 1 MS *
Sample 1 MSD *
Sample 1 Analytical spike (if necessary) *
Samples 2-10

*Analytical batch consisting of trip blanks, equipment blanks and/or field blanks only will be run with no MS/MSD, serial dilution or analytical spike. When MS/MSD is not available, analytical spike and analytical spike duplicate will be run to fulfill batch requirements.

Table 4. (Continued)

Continuing Calibration Verification (CCV)

Continuing Calibration Blank (CCB)

Samples 11-20

CCV
CCB

BATCH 2

Repeat Batch 1

Table 5. DOC Requirements[a]

Analyte	$\bar{x}$	s
Mercury	82-123	<13

[a] Tolerances derived from historical data from Radian Laboratory.

Table 6. Calibration Standard Concentration Levels (mg/L)

Analyte	a	b	c	d	e	f	g
Mercury	0	0.00050	0.0010	0.0020	0.0040	0.010	0.020

Table 7. Other Standard Spike Concentrations

Analyte	LCS/LCSD	MS/MSD			Analytical Spike [b]	
	(mg/L)	Aqueous (mg/L)	Solid [a]		Aqueous (mg/L)	Solid (mg/kg)
			(mg/kg)	(mg/L)		
Mercury	0.010	0.002	0.2	(0.002)	0.002	0.2

[a] Concentration for soil MS/MSD assumes 0.5 g sample diluted to 50 mL. Value in parenthesis is the concentration in the final digestate.

[b] Concentration requirements for Analytical Spike are recommended only. Spike levels may change according to sample concentration. Analytical Spike and Analytical Spike Duplicate will be performed to fulfill batch requirements when no MS/MSD is available.

Table 8. EBS Configuration

Class	T	K	K	K	RL	Cit	TCLP RL
Subclass	C	E/D L/D	M/D R/D	A/D			
Std Subset		LCS	02	C			TCL
Std Date/By	DLC/1/19/98						
Mod Subset							
Mod Date/By							

CHANGE NOTICE NUMBER 1

Title: Mercury by Cold Vapor AA

Document Number: AL/SPC014

Revision Number: 00

Date: 30 September 1995

EFFECTIVE DATE OF CHANGE NOTICE: 31 October 1995

PURPOSE:

To correct the tolerances for laboratory control samples.

HOW TO FILE:

Replace pages 15 and 16 with these replacement pages. Dispose of the old pages in the confidential bin. Place this Change Notice in front of the AL/SPC014 Specification.

APPROVAL:

Laboratory Manager/Supervisor: Date:

Quality Officer: Date:

Technical Director: Date:

Systems Manual Sponsor: Date:

APPROVED FOR ISSUANCE:

Corporate Document Control Officer: Date:

CHANGE NOTICE NUMBER 1

Title: Mercury by Cold Vapor AA

Document Number: AL/SPC014

Revision Number: 01

Date: 15 April 1997

EFFECTIVE DATE OF CHANGE NOTICE: 2 June 1997

PURPOSE:

Clarification of frequency and acceptance criteria for serial dilution and analytical spike.

Update standard EBS configuration (Table 8).

HOW TO FILE:

Replace pages 1, 2, 19, 20, 23, and 24 with these replacement pages. Dispose of the old pages in the confidential bin. Place this Change Notice in front of the AL/SPC014 Specification.

APPROVAL:

Laboratory Manager

Quality Officer: Date:

Technical Director: Date:

Systems Manual Sponsor: Date:

APPROVED FOR ISSUANCE: Date:

Corporate Document Control Officer:

Date:

CHANGE NOTICE NUMBER 2 & 3

Title: Mercury by Cold Vapor AA

Document Number: AL/SPC014

Revision Number: 02

Date: 1-20-98

EFFECTIVE DATE OF CHANGE NOTICE: 1-19-98

PURPOSE: To change STD. Subset for KM/KMD to 02 to reflect accuracy limit of 70 – 130% and RPD of 25%

HOW TO FILE:

Replace page 25 with the attached. Discard old pages in confidential bin. Place this Change Notice form in front of AL/SPC014.

APPROVAL:

Laboratory Manager **Date:**

Quality Officer: **Date:**

Technical Director: **Date:**

Systems Manual Sponsor: **Date:**

APPROVED FOR ISSUANCE:

Corporate Document Control Officer: **Date:**

MERCURY IN LIQUID WASTE (MANUAL COLD-VAPOR TECHNIQUE)

1.0 SCOPE AND APPLICATION

1.1 Method 7470 is a cold-vapor atomic absorption procedure approved for determining the concentration of mercury in mobility-procedure extracts, aqueous wastes, and ground waters. (Method 7470 can also be used for analyzing certain solid and sludge-type wastes; however, Method 7471 is usually the method of choice for these waste types.) All samples must be subjected to an appropriate dissolution step prior to analysis.

2.0 SUMMARY OF METHOD

2.1 Prior to analysis, the liquid samples must be prepared according to the procedure discussed in this method.

2.2 Method 7470, a cold-vapor atomic absorption technique, is based on the absorption of radiation at 253.7-nm by mercury vapor. The mercury is reduced to the elemental state and aerated from solution in a closed system. The mercury vapor passes through a cell positioned in the light path of an atomic absorption spectrophotometer. Absorbance (peak height) is measured as a function of mercury concentration.

2.3 The typical detection limit for this method is 0.0002 mg/L.

3.0 INTERFERENCES

3.1 Potassium permanganate is added to eliminate possible interference from sulfide. Concentrations as high as 20 mg/L of sulfide as sodium sulfide do not interfere with the recovery of added inorganic mercury from Type II water.

3.2 Copper has also been reported to interfere; however, copper concentrations as high as 10 mg/L had no effect on recovery of mercury from spiked samples.

3.3 Seawaters, brines, and industrial effluents high in chlorides require additional permanganate (as much as 25 mL) because, during the oxidation step, chlorides are converted to free chlorine, which also absorbs radiation of 253.7 nm. Care must therefore be taken to ensure that free chlorine is absent before the mercury is reduced and swept into the cell. This may be accomplished by using an excess of hydroxylamine sulfate reagent (25 mL). In addition, the dead air space in the BOD bottle must be purged before adding stannous sulfate. Both inorganic and organic mercury spikes have been quantitatively recovered from seawater by using this technique.

4.0 APPARATUS AND MATERIALS

4.1 Atomic absorption spectrophotometer or equivalent: Any atomic absorption unit with an open sample presentation area in which to mount the absorption cell is suitable. Instrument settings recommended by the particular manufacturer should be followed. Instruments designed specifically for the measurement of mercury using the cold-vapor technique are commercially available and may be substituted for the atomic absorption spectrophotometer.

4.2 Mercury hollow cathode lamp or electrodeless discharge lamp.

4.3 Recorder: Any multirange variable-speed recorder that is compatible with the UV detection system is suitable.

4.4 Absorption cell: Standard spectrophotometer cells 10 cm long with quartz end windows may be used. Suitable cells may be constructed from Plexiglas tubing, 1 in. O.D. x 4.5 in. The ends are ground perpendicular to the longitudinal axis, and quartz windows (1 in. diameter x 1/16 in. thickness) are cemented in place. The cell is strapped to a burner for support and aligned in the light beam by use of two 2-in. x 2-in. cards. One-in.-diameter holes are cut in the middle of each card. The cards are then placed over each end of the cell. The cell is then positioned and adjusted vertically and horizontally to give the maximum transmittance.

4.5 Air pump: Any peristaltic pump capable of delivering 1 L/min air may be used. A Masterflex pump with electronic speed control has been found to be satisfactory.

4.6 Flowmeter: Capable of measuring an air flow of 1 L/min.

4.7 Aeration tubing: A straight glass frit with a coarse porosity. Tygon tubing is used for passage of the mercury vapor from the sample bottle to the absorption cell and return.

4.8 Drying tube: 6-in. x 3/4-in.-diameter tube containing 20 g of magnesium perchlorate or a small reading lamp with 60-W bulb which may be used to prevent condensation of moisture inside the cell. The lamp should be positioned to shine on the absorption cell so that the air temperature in the cell is about 10°C above ambient.

4.9 The cold-vapor generator is assembled as shown in Figure 1.

4.9.1 The apparatus shown in Figure 1 is a closed system. An open system, where the mercury vapor is passed through the absorption cell only once, may be used instead of the closed system.

4.9.2 Because mercury vapor is toxic, precaution must be taken to avoid its inhalation. Therefore, a bypass has been included in the

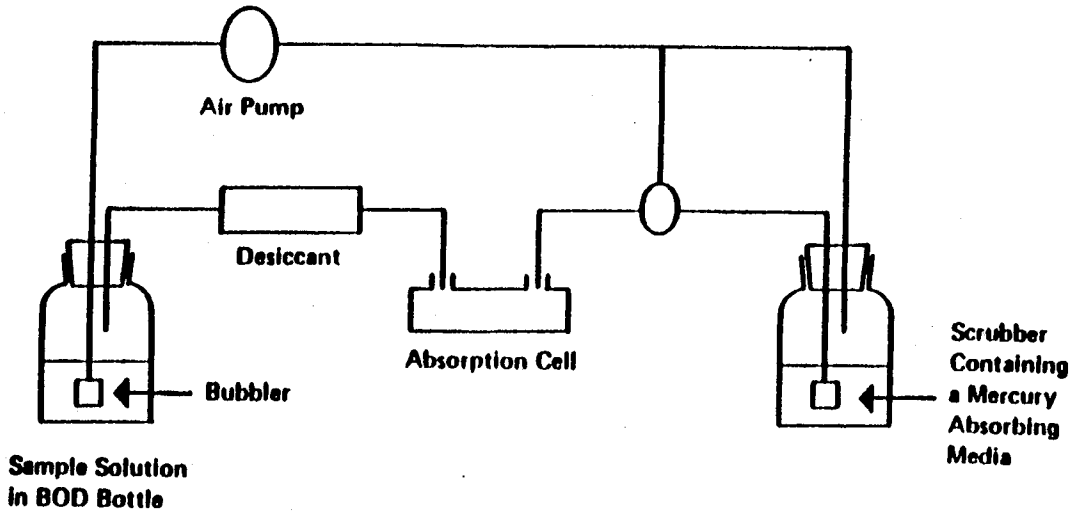

Figure 1. Apparatus for flameless mercury determination.

4.9.2 Because mercury vapor is toxic, precaution must be taken to avoid its inhalation. Therefore, a bypass has been included in the system either to vent the mercury vapor into an exhaust hood or to pass the vapor through some absorbing medium, such as:

1. Equal volumes of 0.1 M $KMnO_4$ and 10% H_2SO_4; or
2. 0.25% Iodine in a 3% KI solution.

A specially treated charcoal that will adsorb mercury vapor is also available from Barnebey and Cheney, East 8th Avenue and North Cassidy Street, Columbus, Ohio 43219, Cat. #580-13 or #580-22.

5.0 REAGENTS

5.1 ASTM Type II water (ASTM D1193): Water should be monitored for impurities.

5.2 Sulfuric acid (H_2SO_4), concentrated: Reagent grade.

5.3 Sulfuric acid, 0.5 N: Dilute 14.0 mL of concentrated sulfuric acid to 1.0 liter.

5.4 Nitric acid (HNO_3), concentrated: Reagent grade of low mercury content. If a high reagent blank is obtained, it may be necessary to distill the nitric acid.

5.5 Stannous sulfate: Add 25 g stannous sulfate to 250 mL of 0.5 N H_2SO_4. This mixture is a suspension and should be stirred continuously during use. (Stannous chloride may be used in place of stannous sulfate.)

5.6 Sodium chloride-hydroxylamine sulfate solution: Dissolve 12 g of sodium chloride and 12 g of hydroxylamine sulfate in Type II water and dilute to 100 mL. (Hydroxylamine hydrochloride may be used in place of hydroxylamine sulfate.)

5.7 Potassium permanganate, mercury-free, 5% solution (w/v): Dissolve 5 g of potassium permanganate in 100 mL of Type II water.

5.8 Potassium persulfate, 5% solution (w/v): Dissolve 5 g of potassium persulfate in 100 mL of Type II water.

5.9 Stock mercury solution: Dissolve 0.1354 g of mercuric chloride in 75 mL of Type II water. Add 10 mL of concentrated HNO_3 and adjust the volume to 100.0 mL (1 mL = 1 mg Hg). 1000ppm

5.10 Mercury working standard: Make successive dilutions of the stock mercury solution to obtain a working standard containing 0.1 g per mL. This working standard and the dilutions of the stock mercury solution should be prepared fresh daily. Acidity of the working standard should be maintained at 0.15% nitric acid. This acid should be added to the flask, as needed, before addition of the aliquot.

6.0 SAMPLE COLLECTION, PRESERVATION, AND HANDLING

6.1 All samples must have been collected using a sampling plan that addresses the considerations discussed in Chapter Nine of this manual.

6.2 All sample containers must be prewashed with detergents, acids, and Type II water. Plastic and glass containers are both suitable.

6.3 Aqueous samples must be acidified to a pH <2 with HNO_3. The suggested maximum holding times for these samples are 38 days in glass containers and 13 days in plastic containers.

6.4 Nonaqueous samples shall be refrigerated, when possible, and analyzed as soon as possible.

7.0 PROCEDURE

7.1 Sample preparation: Transfer 100 mL, or an aliquot diluted to 100 mL, containing <1.0 g of mercury, to a 300-mL BOD bottle. Add 5 mL of H_2SO_4 and 2.5 mL of concentrated HNO_3, mixing after each addition. Add 15 mL of potassium permanganate solution to each sample bottle. Sewage samples may require additional permanganate. Ensure that equal amounts of permanganate are added to standards and blanks. Shake and add additional portions of potassium permanganate solution, if necessary, until the purple color persists for at least 15 min. Add 8 mL of potassium persulfate to each bottle and heat for 2 hr in a water bath maintained at 95°C. Cool and add 6 mL of sodium chloride-hydroxylamine sulfate to reduce the excess permanganate. After a delay of at least 30 sec, add 5 mL of stannous sulfate, immediately attach the bottle to the aeration apparatus, and continue as described in Paragraph 7.3.

7.2 Standard preparation: Transfer 0-, 0.5-, 1.0-, 2.0-, 5.0-, and 10.0-mL aliquots of the mercury working standard, containing 0-1.0 ug of mercury, to a series of 300-mL BOD bottles. Add enough Type II water to each bottle to make a total volume of 100 mL. Mix thoroughly and add 5 mL of concentrated H_2SO_4 and 2.5 mL of concentrated HNO_3 to each bottle. Add 15 mL of $KMnO_4$ solution to each bottle and allow to stand at least 15 min. Add 8 mL of potassium persulfate to each bottle and heat for 2 hr in a water bath maintained at 95°C. Cool and add 6 mL of sodium chloride-hydroxylamine sulfate solution to reduce the excess permanganate. When the solution has been decolorized, wait 30 sec, add 5 mL of the stannous sulfate solution, immediately attach the bottle to the aeration apparatus, and continue as described in Paragraph 7.3.

7.3 Analysis: At this point the sample is allowed to stand quietly without manual agitation. The circulating pump, which has previously been adjusted to a rate of 1 liter/min, is allowed to run continuously. The absorbance will increase and reach a maximum within 30 sec. As soon as the recorder pen levels off (approximately 1 min), open the bypass valve and

continue the aeration until the absorbance returns to its minimum valve. Close the bypass valve, remove the stopper and frit from the BOD bottle, and continue the aeration.

7.4 Construct a calibration curve by plotting the absorbances of standards versus micrograms of mercury. Determine the peak height of the unknown from the chart and read the mercury value from the standard curve.

7.5 Analyze all EP extracts, all samples analyzed as part of a delisting petition, and all samples that suffer from matrix interferences by the method of standard additions.

7.6 Duplicates, spiked samples, and check standards should be routinely analyzed.

7.7 Calculate metal concentrations (1) by the method of standard additions, or (2) from a calibration curve. All dilution or concentration factors must be taken into account. Concentrations reported for multiphased or wet samples must be appropriately qualified (e.g., 5 ug/g dry weight).

8.0 QUALITY CONTROL

8.1 All quality control data should be maintained and available for easy reference or inspection.

8.2 Calibration curves must be composed of a minimum of a blank and three standards. A calibration curve should be made for every hour of continuous sample analysis.

8.3 Dilute samples if they are more concentrated than the highest standard or if they fall on the plateau of a calibration curve.

8.4 Employ a minimum of one blank per sample batch to determine if contamination or any memory effects are occurring.

8.5 Verify calibration with an independently prepared check standard every 15 samples.

8.6 Run one spike duplicate sample for every 10 samples. A duplicate sample is a sample brought through the entire sample preparation and analytical process.

8.7 The method of standard additions (see Method 7000, Section 8.7) shall be used for the analysis of all EP extracts, on all analyses submitted as part of a delisting petition, and whenever a new sample matrix is being analyzed.

9.0 METHOD PERFORMANCE

9.1 Precision and accuracy data are available in Method 245.1 of Methods for Chemical Analysis of Water and Wastes.

10.0 REFERENCES

1. Methods for Chemical Analysis of Water and Wastes, EPA-600/4-82-055, December 1982, Method 245.1.

METHOD 7470

MERCURY (MANUAL COLD-VAPOR TECHNIQUE)

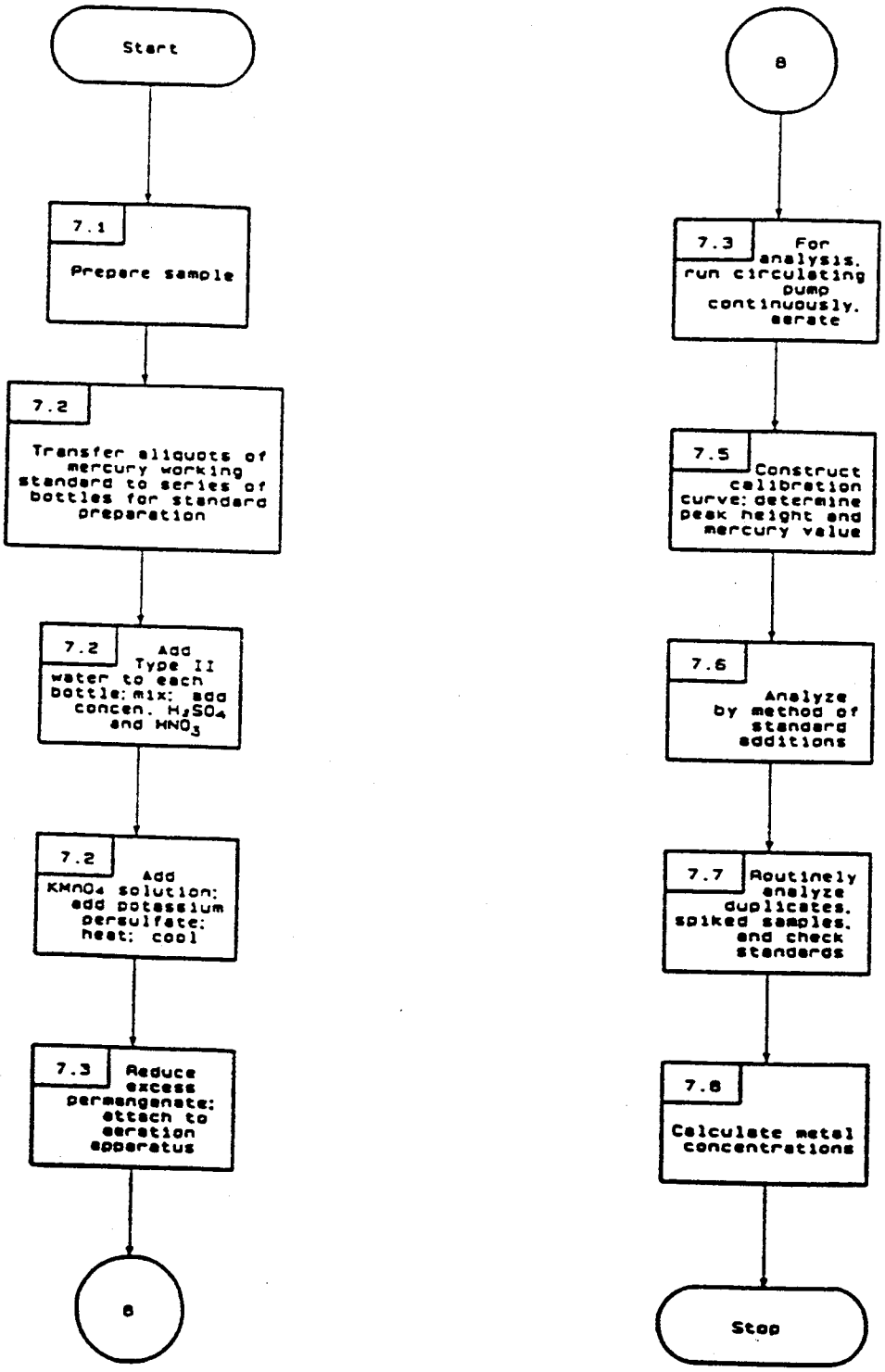

Revision 0
Date September 1986

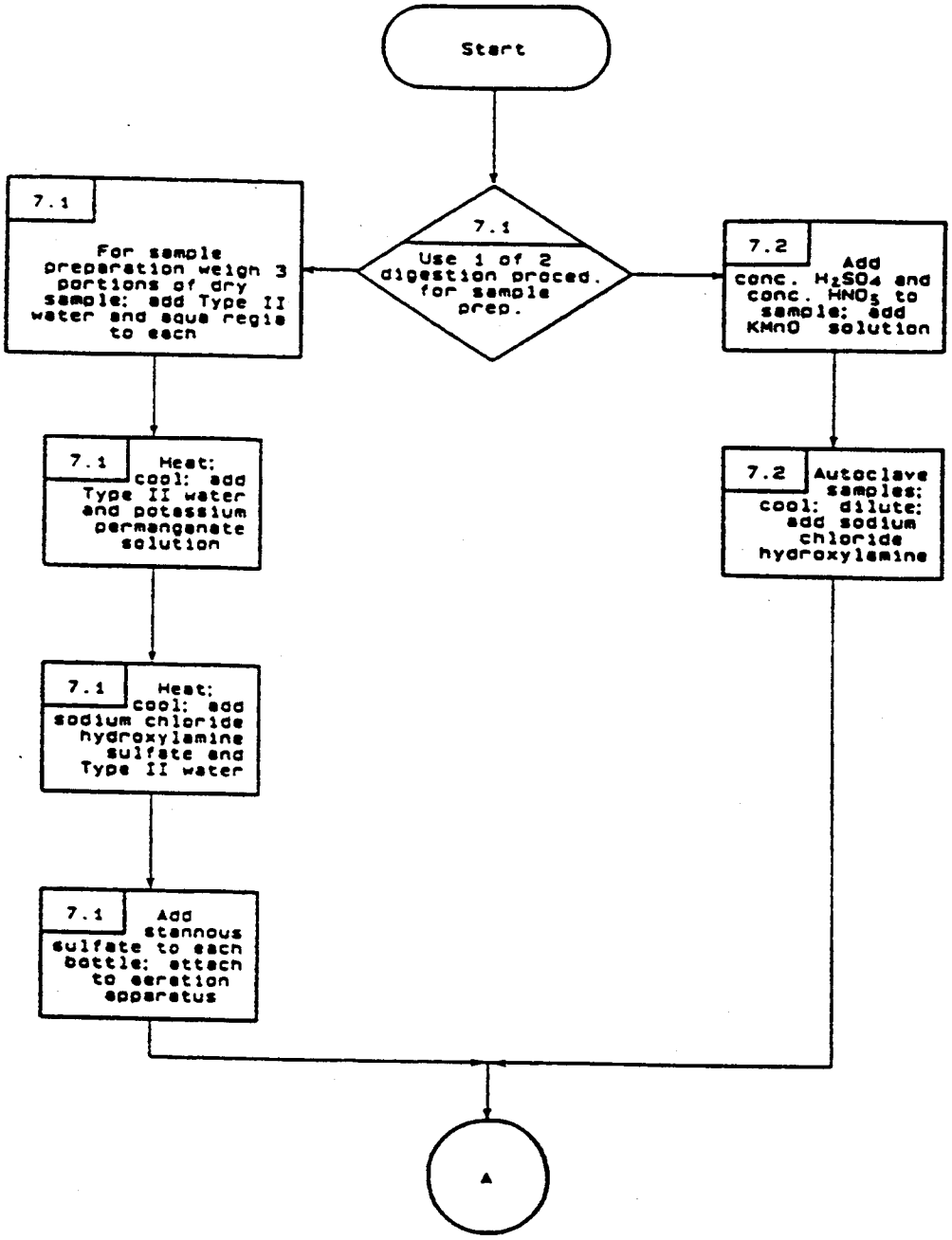
Start
7.1
Use 1 of 2 digestion proced. for sample prep.
7.1
For sample preparation weigh 3 portions of dry sample; add Type II water and aqua regia to each
7.2
Add conc. H_2SO_4 and conc. HNO_3 to sample; add KMnO solution
7.1
Heat; cool; add Type II water and potassium permanganate solution
7.2
Autoclave samples; cool; dilute; add sodium chloride hydroxylamine
7.1
Heat; cool; add sodium chloride hydroxylamine sulfate and Type II water
7.1
Add stannous sulfate to each bottle; attach to aeration apparatus
A

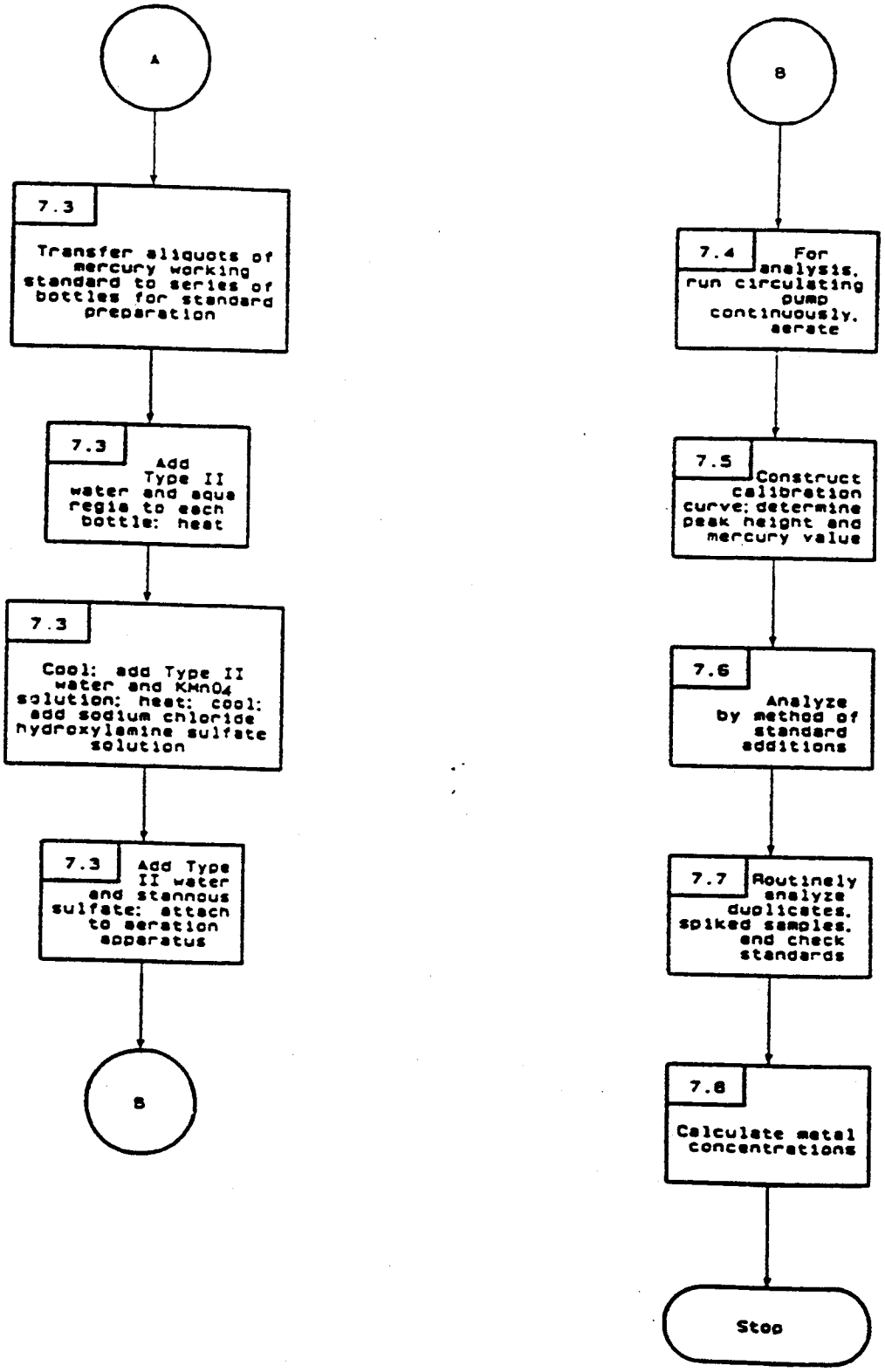
A
7.3
Transfer aliquots of mercury working standard to series of bottles for standard preparation
7.3
Add Type II water and aqua regia to each bottle: heat
7.3
Cool: add Type II water and KMnO4 solution: heat: cool: add sodium chloride hydroxylamine sulfate solution
7.3
Add Type II water and stannous sulfate: attach to aeration apparatus
B
B
7.4
For analysis, run circulating pump continuously, aerate
7.5
Construct calibration curve: determine peak height and mercury value
7.6
Analyze by method of standard additions
7.7
Routinely analyze duplicates, spiked samples, and check standards
7.8
Calculate metal concentrations
Stop

LCRA
THE POWER TO MAKE A DIFFERENCE.

28

June 21, 1999

Mr. William H. Maxwell
U.S. Environmental Protection Agency
Room 1114
411 West Chapel Hill
Durham, North Carolina 27701

Re: Response to Request for Additional Information
Flue Gas Mercury Measurements
Lower Colorado River Authority
Sam K. Seymour Unit 3

Dear Mr. Maxwell:

Please find attached Radian International's responses to your request for additional information concerning a previous Radian sampling report on speciated mercury measurements at Sam K. Seymour Unit 3. We hope with this additional information, the U.S. Environmental Protection Agency will find the report satisfactory to fulfill your flue gas sampling requirement for the Mercury Information Collection Request program.

The LCRA appreciates your consideration of this request. If you have any questions or a need for additional information, please contact me at (512) 473-3272.

Sincerely,

Joe Bentley

Joe Bentley
GenCo Environmental Program Leader

Attachment

Our power is distributed to you through our partnership with the following cities and rural electric cooperatives:
City of Bastrop • Bandera Electric Cooperative, Inc. • Bluebonnet Electric Cooperative, Inc. • City of Burnet • City of Bellville • City of Boerne • City of Brenham • Central Texas Electric Cooperative, Inc. • City of Cuero • DeWitt Electric Cooperative, Inc. • Fayette Electric Cooperative, Inc. • City of Flatonia • City of Fredericksburg • City of Georgetown • City of Giddings • City of Goldthwaite • City of Gonzales • Guadalupe Valley Electric Cooperative, Inc. • City of Hallettsville • Hamilton County Electric Cooperative, Inc. • City of Hempstead • Kimble Electric Cooperative, Inc. • Kerrville Public Utility Board • City of La Grange • City of Lampasas • City of Lexington • City of Llano • City of Lockhart • City of Luling • City of Mason • McCulloch Electric Cooperative, Inc. • City of Moulton • New Braunfels Utilities • Pedernales Electric Cooperative • City of San Saba • San Bernard Electric Cooperative., Inc. • City of Schulenburg • City of Seguin • City of Shiner • San Marcos Electric Utility • City of Smithville • City of Waelder • City of Weimar • City of Yoakum

Results of Flue Gas Mercury Measurements at Sam K. Seymour Station, Unit 3
Response to EPA Comments to Submitted Test Report

1. *The sampling locations are only presented verbally. A schematic of each location is preferable, along with a discussion of the effect on the results of any deviations from the EPA criteria for suitable sampling location.*

   Verbal descriptions of the two sampling locations, at the inlet and outlet ducts to FGD absorber module A, are given in the original test report (Section 2.3). These locations are illustrated in the attached Figures A-1 and A-2, respectively. Although neither location met EPA guidelines for distance to nearest flow disturbance, it is believed that the sample points used for the Ontario Hydro gas samples provided consistent and representative samples free of cyclonic flow and suitable for the mercury determinations. A more detailed discussion is provided below.

   The FGD inlet sampling port location was situated 1.9 duct diameters downstream and 0.47 duct diameters upstream of the nearest flow disturbances. This placed the location very close to those required by EPA sampling protocol (2.0 and 0.5 duct diameters, respectively) although slightly lower than the desired distances. Although this location did not meet EPA requirements, it did represent the best site available upstream of the FGD system. Other locations were closer to flow disturbances or did not enable multiple traversing points.

   Because it did not fully meet the EPA requirements, potential problems with using this location included flow gradients within the duct as well as possible cyclonic flow. This could have led to biased results, particularly if cyclonic flow resulted in the sampling of non-representative gas created by mixing in the downstream plenum area. Another possible problem is high variability caused by inconsistencies in the gas flow patterns.

   Several actions were taken to ensure that suitable, representative samples were obtained at this location. A 64-point velocity traverse was performed to characterize the flue gas velocity in the duct. Sample points were then evaluated based upon how closely they represented average flow as well as the absence of cyclonic flow. The chosen point (#33) met these criteria, as illustrated in the attached velocity profile data sheets.

   The chosen sampling site for FGD outlet gas represented the only available location where absorber outlet gas could be obtained prior to it mixing with bypassed gas, although an identical site did exist downstream of FGD module C. The outlet sampling location was situated 1.7 duct diameters downstream and 1.1 duct diameters upstream of the closest flow disturbance. This indicates that although the distance to the next downstream disturbance was acceptable, this site did not meet EPA guidelines for distance downstream of a disturbance. This could result in any of the problems listed above. A 64-point velocity profile was determined as with the inlet duct and a point of average flow (point #36) was identified for Ontario Hydro

Plan Elevation

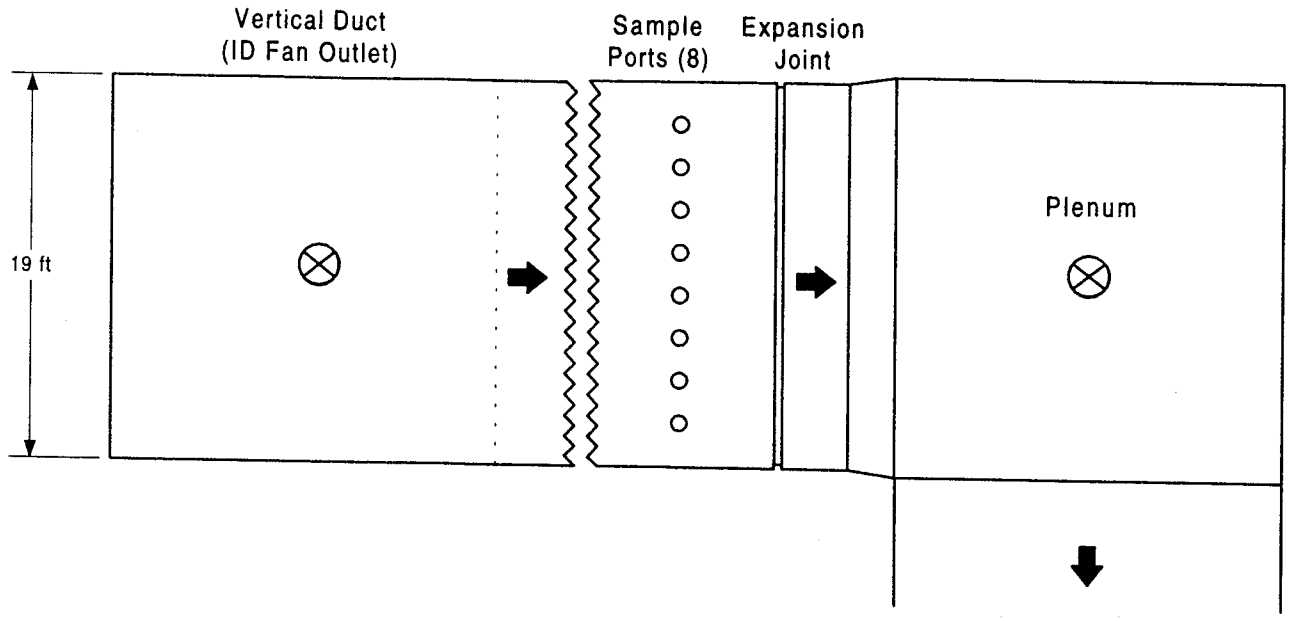

Side Elevation

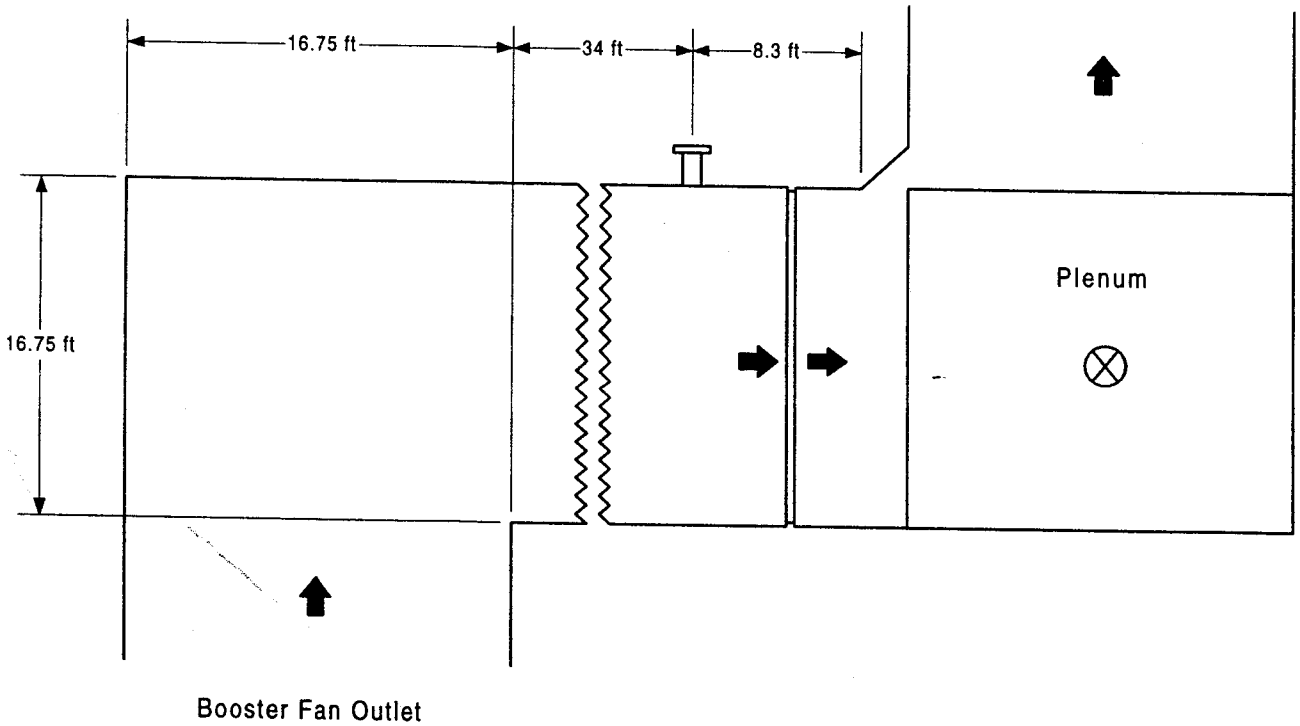

Note: the expansion joint, which has the same internal dimensions as the duct, was not considered a flow disturbance

Figure A1. Seymour Station Unit 3 FGD Inlet Duct Sampling Location

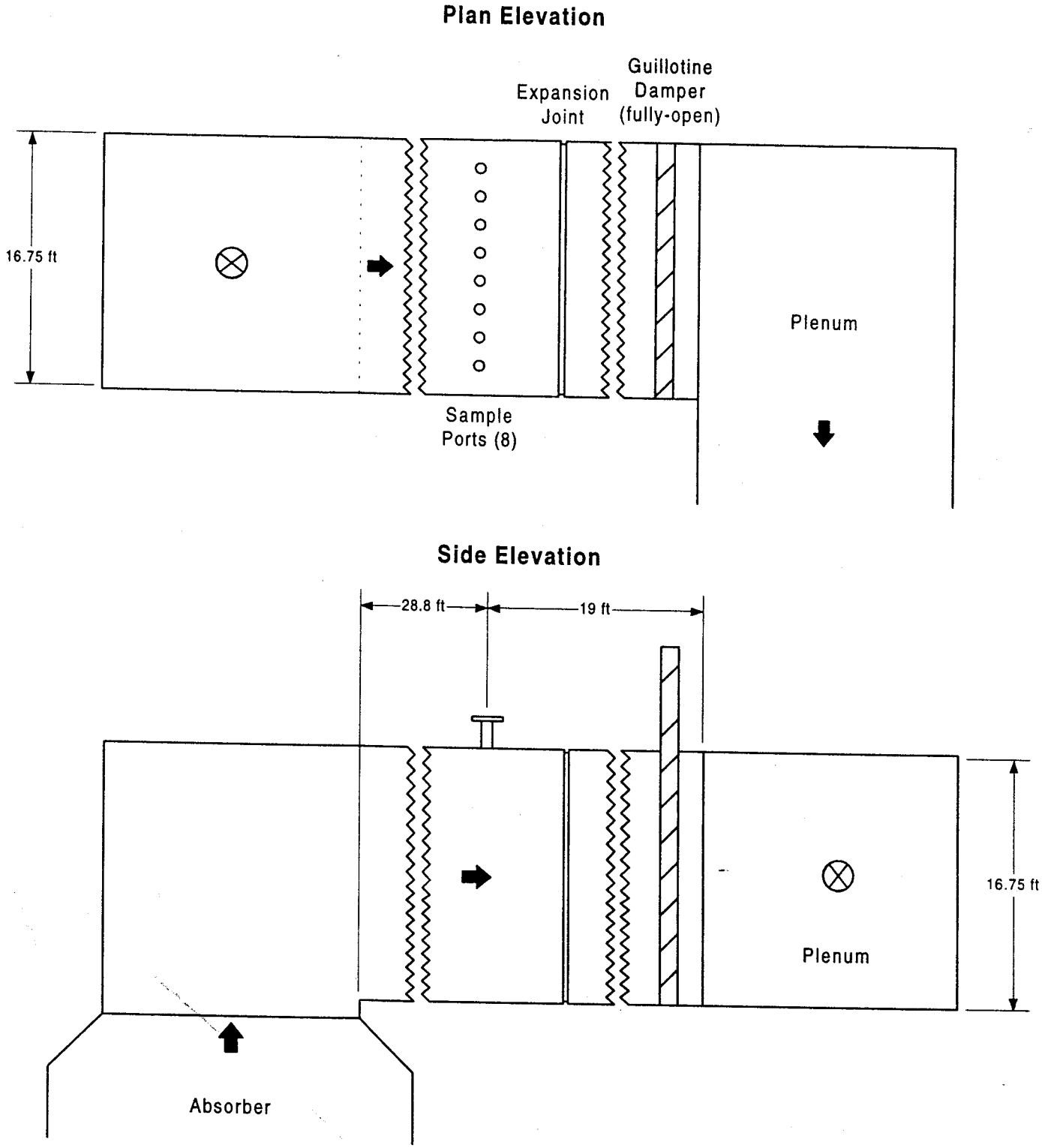

Note: the fully-open guillotine damper and the expansion joint, which have the same internal dimensions as the duct, were not considered flow disturbances

Figure A2 . Seymour Station Unit 3 FGD Outlet Duct Sampling Location

sampling. As shown in the attached velocity profile data sheets, this point showed no cyclonic flow during the velocity traverse.

We think that the sampling approach of conducting a 64-point traverse at each location, checking for cyclonic flow, and picking a point of average velocity that did not exhibit cyclonic flow minimized any impact of the locations not meeting the criteria listed in Method 1. We do not think that the fact that these locations did not meet all of the EPA Method 1 criteria measurably impacted the data quality for the Ontario Hydro Method measurements.

2. *Problems encountered during the testing or analyses and deviations or changes to the plan made to account for these problems (or for other reasons) should be thoroughly explained, particularly with regard to the effect they may have on the results.*

Only one problem was encountered during the Ontario Hydro sampling program. This involved a failed leak-check during the first FGD inlet sample run. This was first believed to be caused by the fitting at the outlet of the filter housing (connected to the umbilical line) coming loose as the probe was removed from the duct at the end of the sample period. No deviations to the sampling plan were therefore made. However, several factors indicated that the leak did indeed occur during the sampling period. This is addressed in detail in Section 3.2 of the Test Report, but the factors include lower moisture, CO_2 and mercury concentration measurements for this sample run and higher oxygen measurements than in the other runs at this location.

The loose fitting likely caused air to leak into the sample gas immediately upstream of the impingers. This resulted in a larger apparent sampling volume of flue gas than was actually obtained; a portion of the apparent sample volume was likely ambient air. This would be expected to cause a low bias in the mercury values for this sample. Upon reviewing the mercury data from the three sample periods (Table 3-6 in the Test Report), it is apparent that this is indeed the case. The first inlet sample showed a "total" mercury concentration (elemental + oxidized mercury) of 8.73 $\mu g/Nm^3$ whereas the other two samples averaged 13.67 $\mu g/Nm^3$. The FGD outlet values for all three runs were very similar. The measured mercury oxidation in the first inlet sample fell in between the second and third samples despite showing lower "total" mercury. This would be consistent with a leak during sampling since both the oxidized and elemental fractions should be diluted to the same extent.

Based upon the leak-check failure and subsequent review of the data, it is believed that the "total" mercury (e.g., elemental + oxidized fractions) concentration measured in the first FGD inlet sample is biased low. However, the indicated mercury oxidation percentage for that sample is believed to be accurate.

Only one analytical QC sample fell outside the accepted range, as described in Section 5.1 of the Test Report. An analytical mercury spike recovery of 120% was observed during an analysis. The acceptable range for this spike recovery was ±15%. This sample involves the addition of a known mercury standard to a split sample

immediately following the digestion step. Failure of this check may indicate problems associated with the measurement of mercury in this particular sample matrix. However, it is not believed that problems existed with this particular analysis set. This assumption is based upon the fact that another analytical spike and a matrix spike (mercury standard added to a split sample prior to the digestion step) both passed during this analysis; all other QC checks also passed. It is therefore believed that the failed QC was an anomaly possibly caused by error associated with sample dilution or volumetric error with the addition of the standard, and had no effect on the quality of the data reported.

There were no other problems during testing or analyses or deviations to the plan to account for problems.

3. *All raw data sheets should be provided.*

Copies of raw data sheets are included with this document. The data sheets included are for:

- Velocity traverse sample sheets, FGD inlet and outlet locations.
- Source sampling field data sheets for Ontario Hydro sampling, FGD inlet and outlet locations.
- Chain of custody forms for samples sent to Radian Fixed-Price Analytical Services (FPAS) laboratory.
- Analytical reports, including all QA/QC results, submitted by analytical lab for impinger, particulate, fly ash, and coal analyses.
- Analytical report for Method 5 particulate loading.
- Copy of analytical report received from Commercial Testing & Engineering Co. for ultimate and proximate coal analyses.

Appended Material

Raw Data Sheets

Velocity Profile Field Data Sheets

VELOCITY PROFILE FIELD DATA SHEET

Plant Name: Seymour Station
Operator:
Sampling Location: Scrubber Inlet
Sample Identification:
Date: 12/2/98
%CO_2:
Start/Finish Time: 9:30 - 9:58
%O_2:
Duct Dimensions: 16.75 x 19.0
Diameter: ft
PTCF:
Bar Press: " Hg
Static Press: "H_2O

	Point	Stack Temperature °F	Velocity Pressure "H_2O	Other	Point	Stack Temperature °F	Velocity Pressure "H_2O	Other
	57	288	0.26	5° ✗	53	292	0.36	0° ✗
	58	288	0.33	0° ✗	54	292	0.30	5° ✗
	59	289	0.37	0° ✗	55	292	0.25	0° ✗
	60	289	0.37	0° ✗	56	292	0.25	5° ✗
	61	289	0.34	0° ✗	41	292	0.30	0° ✗
	62	289	0.34	0° ✗	42	293	0.33	0° ✗
	63	289	0.30	0° ✗	43	294	0.34	0° ✗
	64	289	0.30	0° ✗	44	294	0.32	0° ✗
49	~~65~~	290	0.34	0° ✗	45	295	0.29	0° ✗
50	~~66~~	291	0.37	0° ✗	46	295	0.26	0° ✗
51	~~67~~	291	0.39	0° ✗	47	295	0.24	0° ✗
52	~~68~~	291	0.40	0° ✗	48	293	0.25	0° ✗

Weather: cloudy ~ 68° F

Remarks:

Velocity: ft/sec ACFM: DSCFM:

VELOCITY PROFILE FIELD DATA SHEET

Plant Name: Seymour Station

Sampling Location: Scrubber Inlet

Date: 12/2/98

Start/Finish Time: 10:00 - 10:43

Duct Dimensions: _____ X _____

PTCF: _____

Bar Press: _____ " Hg

Operator: _____

Sample Identification: _____

%CO_2: _____

%O_2: _____

Diameter: _____ ft

Static Press: _____ "H_2O

Point	Stack Temperature °F	Velocity Pressure "H_2O	Other	Point	Stack Temperature °F	Velocity Pressure "H_2O	Other
33	295	0.30	0° ✗	29	299	0.19	0° ✗
34	297	0.29	0° ✗	30	298	0.18	0° ✗
35	297	0.28	0° ✗	31	298	0.15	0° ✗
36	297	0.23	0° ✗	32	297	0.12	-5° ✗
37	297	0.22	0° ✗	17	300	0.25	-5° ✗
38	296	0.20	0° ✗	18	301	0.24	-5° ✗
39	296	0.16	0° ✗	19	301	0.21	0° ✗
40	295	0.13	5° ✗	20	301	0.19	-5° ✗
25	295	0.24	0° ✗	21	300	0.16	0° ✗
26	298	0.22	0° ✗	22	300	0.13	0° ✗
27	298	0.23	0° ✗	23	300	0.13	-5° ✗
28	299	0.23	0° ✗	24	300	0.13	0° ✗

Weather: _____

Remarks: _____

Velocity: _____ ft/sec ACFM: _____ DSCFM: _____

VELOCITY PROFILE FIELD DATA SHEET

Plant Name: Seymour Station
Operator:
Sampling Location: Scrubber Inlet
Sample Identification:
Date: 12/2/98
%CO_2:
Start/Finish Time: 10:45 - 11:15
%O_2:
Duct Dimensions: X
Diameter: ft
PTCF:
Bar Press: " Hg
Static Press: "H_2O

Point	Stack Temperature °F	Velocity Pressure "H_2O	Other	Point	Stack Temperature °F	Velocity Pressure "H_2O	Other
9	301	0.24	-5° ↺	5	303	0.18	-5° ↺
10	302	0.21	-10° ↺	6	302	0.18	-5° ↺
11	302	0.20	-10° ↺	7	302	0.17	-5° ↺
12	302	0.18	-5° ↺	8	301	0.14	-5° ↺
13	302	0.18	-5° ↺				
14	302	0.15	-5° ↺				
15	302	0.15	0° ↺				
16	302	0.13	0° ↺				
1	301	0.17	-10° ↺				
2	303	0.22	-10° ↺				
3	303	0.23	-15° ↺				
4	303	0.17	-5° ↺				

* negative denotes counter-clockwise

Weather:

Remarks: Avg ΔP (RMS) .233178 Avg T 296.5625

Velocity: ft/sec ACFM: DSCFM:

Seymour FGD Inlet
12/2/98

FIGURE 1
SPRAY TOWER OUTLET
4 POINT TRAVERSE PLANE

~~Outlet~~ OR

Inlet

Ave = Pt 28

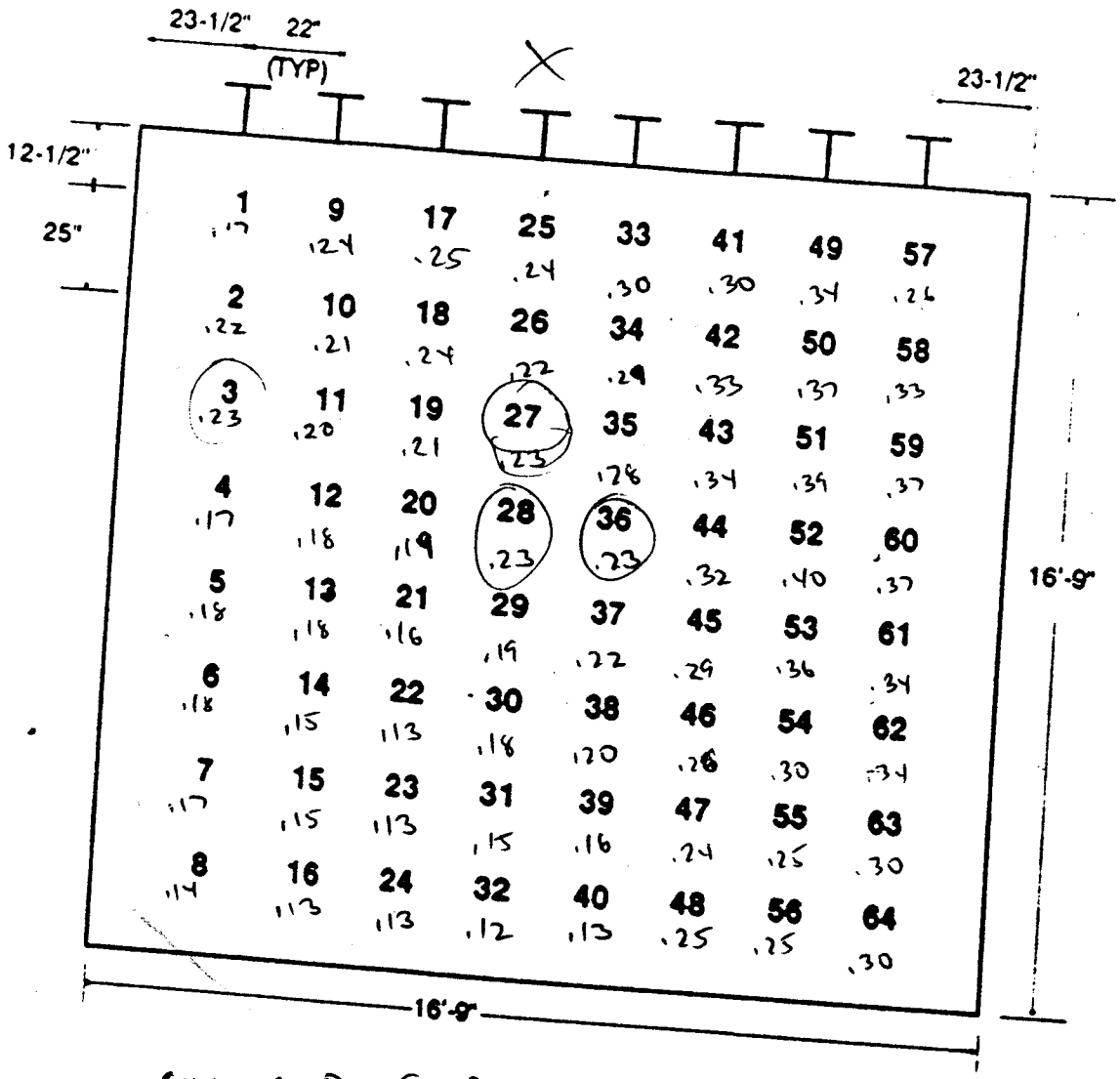

CUS ΔP (RMS) .233178

GAS FLOW INTO PAPER

TRAVERSE FIELD DATA SHEET

Plant Name Seymour Station

Sampling Location Outlet

Date 12/01/98

Operator AO

Stack Diameter 201"

Sample Port Diameter 4"

Sample Port Depth 26"

Distance Upstream

Distance Downstream

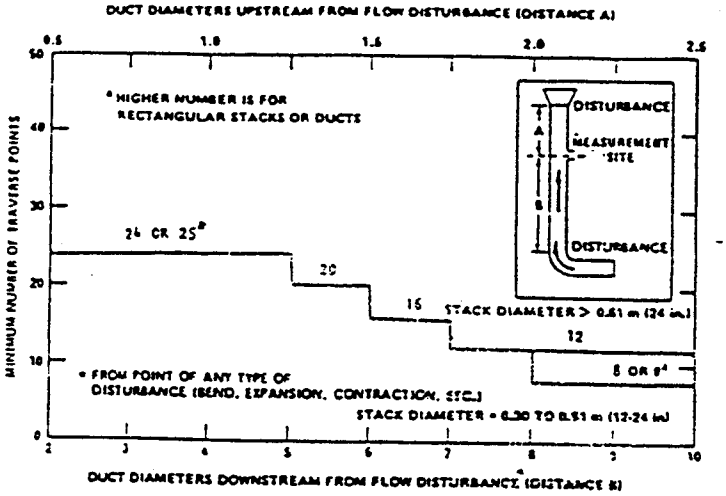

Traverse Point Number	Number Traverse Points On A Diameter											
	2	4	6	8	10	12	14	16	18	20	22	24
1	14.6	6.7	4.4	3.2	2.6	2.1	1.8	1.6	1.4	1.3	1.1	1.1
2	85.4	25.0	14.6	10.5	8.2	6.7	5.7	4.9	4.4	3.9	3.5	3.2
3		75.0	29.6	19.4	14.6	11.8	9.9	8.5	7.5	6.7	6.0	5.5
4		93.3	70.4	32.3	22.6	17.7	14.6	12.5	10.9	9.7	8.7	7.9
5			85.4	67.7	34.2	25.0	20.1	16.9	14.6	12.9	11.6	10.6
6			95.6	80.6	65.8	35.6	26.9	22.0	18.8	16.5	14.6	13.2
7				89.5	77.4	64.4	36.6	28.3	23.6	20.4	18.0	16.1
8				96.8	85.4	75.0	63.4	37.5	29.6	25.0	21.8	19.4
9					91.8	82.3	73.1	62.5	38.2	30.6	26.2	23.0
10					97.4	88.2	79.9	71.7	61.8	38.8	31.6	27.2
11						93.3	85.4	78.0	70.4	61.2	39.3	32.3
12						97.9	90.1	83.1	76.4	69.4	60.7	39.8
13							94.3	87.5	81.2	75.0	68.5	60.2
14							98.2	91.5	85.4	79.6	73.8	67.7
15								95.1	89.1	83.5	78.2	72.8
16								98.4	92.5	87.1	82.0	77.0
17									95.6	90.3	85.4	80.6
18									98.6	93.3	88.4	83.9
19										96.1	91.3	86.8
20										98.7	94.0	89.5
21											96.5	92.1
22											98.9	94.5
23												96.8
24												98.9

Traverse Points	
No.	Distance From Wall
1	38.6
2	63.7
3	88.8
4	113.9
5	139.1
6	164.2
7	189.3
8	214.4
9	
10	
11	
12	
13	
14	
15	
16	
17	
18	
19	
20	
21	
22	
23	
24	

VELOCITY PROFILE FIELD DATA SHEET

Plant Name: San Seymour
Operator: AO, KS
Sampling Location: Outlet
Sample Identification: Prelim. Traverse
Date: 12/2/98
%CO_2:
Start/Finish Time: 10:40 / 12:30
%O_2:
Duct Dimensions: 16.75 x 16.75
Diameter: ft
PTCF: 0.840
Bar Press: 29.5 " Hg
Static Press: -0.55 "H_2O

Point	Stack Temperature °F	Velocity Pressure "H_2O	Null Angle / Other	Point	Stack Temperature °F	Velocity Pressure "H_2O	Null Angle / Other
1	138	0.53	0°	13	133	0.27	0
2	137	0.59	0°	14	134	0.18	0°
3	137	0.52	0°	15	134	0.07	0°
4	137	0.41	5°	16	136	0.12	10°
5	138	0.40	5°	17	141	0.61	0°
6	137	0.20	0°	18	140	0.53	0
7	135	0.13	15° / 0.10	19	138	0.41	5°
8	135	0.04	~~20°~~ 20° / 0.03	20	137	0.30	0
9	139	0.64	5°	21	136	0.22	0°
10	138	0.65	5°	22	136	-0.14	0°
11	136	0.58	5°	23	137	0.08	10°
12	135	0.47	5°	24	139	0.1	20°

Weather:

Remarks:

Velocity: ft/sec ACFM: DSCFM:

VELOCITY PROFILE FIELD DATA SHEET

Plant Name: San Seymour
Operator: AO, KS
Sampling Location: Outlet
Sample Identification: Prelim Traverse
Date: 12/2/98
$\%CO_2$:
Start/Finish Time: 10:40 / 12:30
$\%O_2$:
Duct Dimensions: 16.75' x 16.75'
Diameter: 16.75 ft
PTCF: 0.840
Bar Press: 29.5 " Hg
Static Press: -0.55 "H_2O

Point	Stack Temperature °F	Velocity Pressure "H_2O	Null Angle Other	Point	Stack Temperature °F	Velocity Pressure "H_2O	Null angle Other
25	136	0.63	0°	37	134	~~0.2~~ K.S 0.18	5°
26	135	0.53	0°	38	134	0.15	0°
27	130	0.48	5°	39	134	0.14	10°
28	129	0.32	0	40	134	0.07	15°
29	132	0.17	5°	41	136	0.34	0°
30	132	0.11	5°	42	136	0.60	0°
31	131	0.09	20°	43	134	0.50	0°
32	134	0.09	5°	44	134	0.43	0°
33	136	0.57	0°	45	132	0.22	0°
34	135	0.58	0°	46	129	0.20	10°
35	135	0.49	0°	47	133	0.23	10°
36	134	0.34	0°	48	135	0.15	10°

Weather:

Remarks:

Velocity: ft/sec ACFM: DSCFM:

VELOCITY PROFILE FIELD DATA SHEET

Plant Name: Sam Seymour
Sampling Location: Outlet
Date: 12/2/96
Start/Finish Time: 10:40 / 12:30
Duct Dimensions: 16.75' x 16.75'
PTCF: 0.840
Bar Press: 29.5 " Hg

Operator: AO, KS
Sample Identification: Prelim Traverse
%CO_2:
%O_2:
Diameter: ft
Static Press: → 0.55 "H_2O

Point	Stack Temperature °F	Velocity Pressure "H_2O	Null Angle Other	Point	Stack Temperature °F	Velocity Pressure "H_2O	Null Angle Other
49	143	0.73	0°	61	~~146~~ KS 143	~~0.13~~ KS 0.23	0
50	143	0.61	5°	62	144	0.20	5
51	143	0.48	5°	63	144	0.18	0
52	141	0.40	5°	64	146	0.13	5°
53	~~136~~ KS 138	0.18	0°				
54	135	0.24	0°				
55	135	0.15	5				
56	138	0.11	20°				
57	140	0.68	0°				
58	140	0.66	0				
59	141	0.62	0°				
60	142	0.45	0°				

Weather: Avg ΔP = 0.34 ✓ Avg T_s = 137.2 Avg Cyclonic angle: 4.3°

Remarks: Use point #36 for OH sampling

Velocity: ft/sec ACFM: DSCFM:

Source Sampling Field Data Sheets

for Ontario Hydro Method Sample Runs

SOURCE SAMPLING FIELD DATA SHEET

Plant Name Seymour Station

Page ____ of ____

Sampling Location FGD Inlet

Train Ontario Hydro

Date 12/2/98 Time Start 1415

Run No. 1 Cond. No. ____

Duct Dimensions 16.75 X 16.75

Time Finish 1605 Test Duration 108 min.

PTCF .84 DGMCF .995

Diameter ____ ft Initial Leak Rate 0.003 @ 17 "Hg

NOZZLE DIA. .278 inches Final Leak Rate ____ @ ____ "Hg

Bar Press 29.5 " Hg

Static Press 2.5 " H2O

Operator CSG

Kf = 3.98

Point	Clock Time	Dry gas meter reading ft3	^P in H2O	^H in H2O	Stack Temp. F	Probe Temp F	Hot box Temp. F	Impinger Exit Temp. F	Dry gas meter temp. Inlet F	Dry gas meter temp. Outlet F	Vacuum in. Hg	Sample time
27	1415	88.059	.31	1.23	305	300	303	67	82	81	5.0	298
stop	1417	89.288										
27	1425	89.288	.27	1.07	306	321	311	65	84	82	4.5	320
	1430	92.15	.27	1.07	307	318	315	58	84	82	4.5	324
	1435	95.0	.28	1.11	307	317	317	58	86	82	4.5	313
	1440	97.8	.28	1.11	307	313	310	60	86	83	4.5	304
	1445	100.7	.30	1.19	307	318	315	62	89	83	4.5	300
	1450	103.7	.30	1.19	306	307	314	64	90	83	4.5	306
	1455	106.6	.30	1.19	305	309	309	65	90	83	4.5	312
	1500	109.6	.28	1.11	306	307	316	66	91	84	4.5	315
	1505	112.4	.28	1.11	305	310	313	67	91	84	4.5	318
	1510	115.3	.25	1.0	304	308	304	67	92	84	4.5	320
	1515	118.2	.25	1.0	304	313	311	68	92	84	4.5	322
	1520	121.0	.27	1.07	304	309	309	68	92	84	4.5	318
	1525	123.8	.30	1.19	304	311	312	68	92	84	4.5	314
	1530	126.8	.28	1.11	304	313	308	58	92	84	4.5	312
	1535	129.7	.27	1.07	305	320	314	54	93	85	4.5	310
	1540	132.3	.22	.88	303	318	308	53	93	85	4.0	311
	1545	135.2	.26	1.03	304	316	317	52	93	85	4.5	308
	1550	137.8	.26	1.03	304	312	315	52	95	86	4.5	309
	1555	140.7	.28	1.11	304	308	309	52	95	87	4.5	310
	1600	143.6	.25	1.0	304	318	308	51	96	87	4.5	309
Stop	1605	146.671										
			0.550									
Avg.	—	58.612	~~0.546~~	1.14	305.3					91.5		
Check'd		~~55.3c~~ AO	AO	AO	AO					AO		

CONSOLE # A161361

FILTER # ____

AMBIENT TEMP. 80

PROBE LENGTH 10'

LINER MATERIAL Pyrex

Velocity ____

% Moisture ____

Flowrate (DSCFM) ____

Isokinetic (%) ____

REMARKS Did not pass 1st leak check after removing the probe from the port @ the end of the test. The fitting connecting the filter to the sample line had come loose (possibly after testing)

SOURCE SAMPLING FIELD DATA SHEET

Plant Name Seymour Station

Page ____ of ____

Sampling Location FGD Inlet — Train Ontario Hydro

Date 12/3/98 — Time Start 0935 — Run No. 2 — Cond. No. ____

Duct Dimensions 16.75 x 16.75 — Time Finish 1115 — Test Duration 100 min.

PTCF .84 — DGMCF .995 — Diameter ____ ft — Initial Leak Rate 0.002 @ 15 "Hg

Bar Press ____ "Hg — NOZZLE DIA. .278 inches — Final Leak Rate 0.004 @ 7 "Hg

Static Press 2.5 "H2O — Operator ____ — Kf = 4.02

Point	Clock Time	Dry gas meter reading ft3	^P in H2O	^H in H2O	Stack Temp. F	Probe Temp F	Hot box Temp. F	Impinger Exit Temp. F	Dry gas meter temp. Inlet F	Dry gas meter temp. Outlet F	Vacuum in. Hg	Sample line
27	0935	152.162	.32	1.29	295	297	307	67	75	73	5.5	325
	0940	155.2	.34	1.37	296	296	299	54	77	74	5.5	318
	0945	158.3	.35	1.41	296	293	300	53	79	74	5.5	312
	0950	161.4	.34	1.37	296	293	306	53	82	75	5.5	305
	0955	164.6	.36	1.45	298	303	301	54	85	76	5.5	303
	1000	167.8	.37	1.49	298	306	304	54	86	77	6.0	304
	1005	171.0	.35	1.41	299	307	304	55	87	78	5.5	305
	1010	174.2	.36	1.45	300	308	299	56	88	79	5.5	308
	1015	177.4	.33	1.33	300	293	304	56	88	79	5.5	310
	1020	180.5	.37	1.49	301	297	300	56	88	79	6.0	308
	1025	183.7	.38	1.53	303	311	311	56	89	80	6.0	304
	1030	187.0	.38	1.53	303	310	302	56	89	80	6.0	304
	1035	190.3	.34	1.37	304	300	306	57	89	80	5.5	302
	1040	193.5	.39	1.57	305	304	309	57	90	81	6.0	301
	1045	197.3	0.39	1.57	306	304	303	56	90	81	6.0	304
	1050	200.2	0.38	1.53	306	299	310	56	91	81	6.0	306
	1055	203.5	.32	1.29	305	299	303	56	91	81	5.5	305
	1100	206.6	.33	1.33	305	302	313	57	91	82	5.5	310
	1105	209.7	.26	1.04	304	307	305	57	91	82	5.0	312
	1110	212.5	.29	1.16	304	313	309	56	91	82	5.5	314
Stop	1115	215.434										
			√Δp									
Avg.	—	63.272	0.589	1.40	301.2					82.8		
Check'd		AO	AO	AO	AO					AO		

CONSOLE # A161361

FILTER # 2-In

AMBIENT TEMP. 25

PROBE LENGTH 10'

LINER MATERIAL Pyrex

Velocity ____

% Moisture ____

Flowrate (DSCFM) ____

Isokinetic (%) ____

REMARKS ____

SOURCE SAMPLING FIELD DATA SHEET

Plant Name: Seymour Station

Page ____ of ____

Sampling Location: FGD Inlet — Train: Ontario Hydro

Date: 2/2/98 — Time Start: 1305 — Run No. 1 3 — Cond. No.

Duct Dimensions: 16.75 x 16.75 — Time Finish — Test Duration: 100 min.

PTCF: .84 — DGMCF: .995 — Diameter ft — Initial Leak Rate: 0.002 @ 15 "Hg

Bar Press: " Hg 1.917 — NOZZLE DIA: .278 inches — Final Leak Rate: 0.002 @ 5 "Hg

Static Press: 2.5 " H2O — Operator: CSG — Kf = 4.09

Point	Clock Time	Dry gas meter reading ft3	^P in H2O	^H in H2O	Stack Temp. F	Probe Temp F	Hot box Temp. F	Impinger Exit Temp. F	Dry gas meter temp. Inlet F	Dry gas meter temp. Outlet F	Vacuum in. Hg	Sample Line
27	1305	218.442	.29	1.14	301	298	311	68	83	81	5.0	329
	1310	221.5	.30	1.23	302	301	304	65	85	82	5.0	321
	1315	224.6	.21	.86	299	311	306	58	86	82	4.0	315
	1320	227.2	.21	.86	299	301	305	56	87	82	4.0	317
	1325	229.7	.26	1.06	300	307	307	55	89	83	4.5	314
	1330	232.4	.25	1.02	299	306	310	54	91	84	4.5	310
	1335	235.2	.22	.90	297	307	305	54	90	83	4.0	310
	1340	237.8	.29	1.19	298	311	309	54	92	84	5.0	311
	1345	240.8	.25	1.02	297	312	307	53	93	85	4.5	312
	1350	243.6	.27	1.10	297	314	305	53	92	85	4.5	313
	1355	246.4	.26	1.06	296	311	313	53	93	85	4.5	310
	1400	249.1	.22	.90	295	299	311	53	93	85	4.0	307
	1405	251.8	.22	.90	294	304	305	54	92	85	4.0	307
	1410	254.4	.25	1.02	294	299	312	54	92	85	4.5	305
	1415	257.1	.25	1.02	294	303	304	54	92	85	4.5	305
	1420	259.9	.25	1.02	294	302	306	54	93	86	4.5	305
	1425	262.6	.21	.86	294	300	310	55	94	86	4.0	304
	1430	265.2	.27	1.10	293	312	305	54	94	86	4.5	304
	1435	268.0	.27	1.10	292	304	304	53	94	86	4.5	305
	1440	270.9	.27	1.10	292	311	310	53	93	86	4.5	303
Stop	1445	273.877										
			ΔP									
Avg.	—	55.435	0.500	1.03	296.4					87.6	~~87.6~~	
Check'd		AO	AO	AO	AO					AO		

CONSOLE # A161361

FILTER # Q-5788

AMBIENT TEMP. 80

PROBE LENGTH 10'

LINER MATERIAL Pyrex

Velocity

% Moisture

Flowrate (DSCFM)

Isokinetic (%)

REMARKS

Field Blank

SOURCE SAMPLING FIELD DATA SHEET

Plant Name: Seymour Station

Page ____ of ____

Sampling Location: ~~FGD Inlet~~ Blank

Train: Ontario Hydro

Date: 12/3/98 Time Start ______ Run No. 1 Cond. No. ______

Time Finish ______ Test Duration ______ min.

Duct Dimensions ______ X ______ Diameter ______ ft Initial Leak Rate ______ @ ______ "Hg

PTCF ______ DGMCF ______ NOZZLE DIA. ______ inches Final Leak Rate ______ @ ______ "Hg

Bar Press ______ " Hg

Static Press ______ " H2O Operator ______ Kf = ______

Point	Clock Time	Dry gas meter reading ft3	^ P in H2O	^ H in H2O	Stack Temp. F	Probe Temp F	Hot box Temp. F	Impinger Exit Temp. F	Dry gas meter temp. Inlet F	Dry gas meter temp. Outlet F	Vacuum in. Hg	______
Avg.	—											
Check'd												

CONSOLE # ______

FILTER # ______

AMBIENT TEMP. ______

PROBE LENGTH ______

LINER MATERIAL ______

Velocity ______

% Moisture ______

Flowrate (DSCFM) ______

Isokinetic (%) ______

REMARKS ______

SOURCE SAMPLING FIELD DATA SHEET

Plant Name Seymour Station

Page 1 of 1

Sampling Location FGD ~~Inlet~~ Outlet

Train Ontario Hydro

Date 12/2/98 Time Start 1425

Run No. 1 Cond. No.

Time Finish 1605 Test Duration 100 min.

Duct Dimensions X

Diameter 16.75 ft Initial Leak Rate 0.008 @ 20 "Hg

PTCF 0.840 DGMCF ~~1.967~~ 0.99 NOZZLE DIA. 0.274 inches Final Leak Rate 0.008 @ 10 "Hg

Bar Press 29.5 "Hg ΔH@ = 1.967

Static Press -0.55 "H2O Operator AO, KS

Kf = 4.358

Outlet Point 36	Clock Time	Dry gas meter reading ft3	^P in H2O	^H in H2O	Stack Temp. F	Probe Temp F	Hot box Temp. F	Impinger Exit Temp. F	Dry gas meter temp. Inlet F	Dry gas meter temp. Outlet F	Vacuum in. Hg	
1	1425	131.324	0.34	1.46	132	278	278	67	86	85	6	
2	1430	134.500	0.34	1.48	133	276	281	67	95	85	5	
3	1435	137.737	0.34	1.48	133	286	278	67	99	87	5	
4	1440	140.992	0.32	1.39	132	285	288	62	98	87	5	
5	1445	144.175	0.36	1.57	134	282	276	62	98	88	5	
6	1450	147.305	0.34	1.48	136	273	289	63	99	89	5	
7	1455	150.482	0.30	1.31	137	278	284	64	100	90	5	
8	1500	153.614	0.32	1.39	138	280	283	64	101	90	5	
9	1505	156.735	0.36	1.57	137	281	288	64	102	90	5	
10	1510	159.873	0.34	1.48	137	285	279	65	100	90	5	
11	1515	162.751	0.30	1.31	133	281	281	63	100	90	5	
12	1520	165.865	0.34	1.48	132	284	284	64	100	90	5	
13	1525	168.815	0.32	1.39	136	279	285	65	101	90	5	
14	1530	171.907	0.30	1.31	137	275	278	65	101	91	5	
15	1535	175.000	0.30	1.31	136	273	289	66	102	91	5	
16	1540	178.157	0.24	1.05	135	274	282	58	101	91	5	
17	1545	180.962	0.26	1.15	134	288	283	56	101	91	5	
18	1550	183.877	0.30	1.31	135	276	287	56	101	92	5	
19	1555	186.834	0.30	1.31	133	279	274	55	99	90	5	
20	1600	189.925	0.30	1.31	133	274	287	55	99	90	5	
~~Stop~~	~~1605~~	~~192.902~~										
			√ΔP = 0.562									
Avg.	—	61.578		1.38	134.7					94.3		
Check'd		AO	AO	AO	134.7 AO					94.3 AO		

CONSOLE # A161398

FILTER # Q-5782

AMBIENT TEMP. ~70°

PROBE LENGTH 10 ft.

LINER MATERIAL glass

Velocity

% Moisture

Flowrate (DSCFM)

Isokinetic (%)

REMARKS Heated transfer line @ ~250° F

SOURCE SAMPLING FIELD DATA SHEET

Plant Name: Seymour Station

Page 1 of 1

Sampling Location: FGD ~~Inlet~~ OR Outlet

Train: Ontario Hydro

Date: 12/2/98 Time Start: 0935 Time Finish: 1115 Test Duration: 100 min.

Run No.: R-2 Cond. No.:

Duct Dimensions: 16.9" x 16.9" Diameter: ft

Initial Leak Rate: 0.004 @ 15 "Hg

PTCF: 0.840 DGMCF: 0.999 NOZZLE DIA.: 0.274 inches

Final Leak Rate: 0.002 @ ~~10~~ 5 "Hg

Bar Press: "Hg ΔH@ 1.967

Static Press: -0.55 "H2O Operator: AO, KS

Kf = ~~4.57~~ 4.43 K.S.

Point	Clock Time	Dry gas meter reading ft3	^P in H2O	^H in H2O	Stack Temp. F	Probe Temp F	Hot box Temp. F	Impinger Exit Temp. F	Dry gas meter temp. Inlet F	Dry gas meter temp. Outlet F	Vacuum in. Hg	
36	0935	194.736	0.35	1.55	130	272	289	67	75	74	5	
	0940	198.060	0.35	1.55	130	272	280	65	78	74	5	
	0945	201.370	0.33	1.46	129	271	280	65	84	76	5	
	0950	204.540	0.35	1.55	128	272	275	66	85	76	5	
	0955	207.822	0.35	1.55	129	270	278	66	86	76	5	
	1000	211.120	0.38	1.68	129	272	278	64	88	78	5	
	1005	214.488	0.38	1.68	130	273	280	61	91	79	5	
	1010	217.920	0.38	1.68	128	273	281	59	92	79	5	
	1015	221.340	0.35	1.55	128	273	274	60	92	81	5	
	1020	224.659	0.35	1.55	130	281	282	60	94	82	5	Probe Temp = 281
	1025	227.935	0.37	1.64	132	279	272	60	94	83	5	
	1030	231.243	0.35	1.55	127	282	282	61	94	83	5	
	1035	234.521	0.38	1.68	125	268	277	63	95	84	5	
	1040	237.845	0.38	1.68	126	267	274	63	95	84	5	
	1045	241.125	0.38	1.68	127	274	282	62	93	83	5	
	1050	244.510	0.40	1.77	129	264	270	63	93	83	5	
	1055	247.885	0.35	1.55	131	278	280	63	94	84	5	
	1100	250.927	0.12	0.53	133	276	280	64	94	85	3	
	1105	252.962	0.11	0.49	131	278	273	64	92	84	3	
	1110	254.985	0.11	0.49	130	269	283	65	91	84	3	
	1115	256.975										
			√ΔP =									
Avg.	—	62.239	0.563	1.44	129.1					85.3		
Check'd		AO	AO	AO	AO					AO		

CONSOLE # AK61398

FILTER # Q-5786

AMBIENT TEMP. 68°

PROBE LENGTH 10'

LINER MATERIAL Glass

Velocity

% Moisture

Flowrate (DSCFM)

Isokinetic (%)

REMARKS Heated Transfer line @ ~ 255° F

SOURCE SAMPLING FIELD DATA SHEET

Plant Name Seymour Station

Page 1 of 1

Sampling Location FGD ~~Inlet~~ CR Outlet

Train Ontario Hydro

Date 12/2/98 Time Start 1305 Time Finish 1445 Run No. CR 3 Cond. No.

Duct Dimensions 16'9" x 16'9" Diameter ft Test Duration 100 min.

PTCF 0.840 DGMCF ~~1.967~~ 0.999 NOZZLE DIA. 0.274 inches Initial Leak Rate 0.004 @ 15 "Hg

Bar Press 29.5 "Hg Final Leak Rate 0.003 @ 7.5 "Hg

Static Press -0.55 "H2O DH@=1.967 Operator KS, AO

Kf = 4.43

Point	Clock Time	Dry gas meter reading ft3	^P in H2O	^H in H2O	Stack Temp. F	Probe Temp F	Hot box Temp. F	Impinger Exit Temp. F	Dry gas meter temp. Inlet F	Dry gas meter temp. Outlet F	Vacuum in. Hg	
36	1305	260.860	0.34	1.51	131	282	274	67	81	81	7	
	1310	264.020	0.30	1.33	130	266	282	55	85	81	4	
	1315	267.042	0.22	0.97	131	268	270	53	88	81	4	
	1320	269.795	0.22	0.97	131	281	282	57	89	82	4	
	1325	272.500	0.25	1.11	132	269	274	58	90	82	4	
	1330	275.223	0.25	1.11	133	270	277	59	92	83	4	
	1335	278.118	0.25	1.17	133	273	276	57	92	83	4	
	1340	281.200	0.30	1.41	133	270	274	53	93	84	5	
	1345	284.425	0.30	1.41	134	273	282	53	94	84	5	
	1350	287.900	0.36	1.70	133	270	275	52	94	84	5.5	
	1355	291.248	0.29	1.37	133	270	278	52	94	85	5	
	1400	294.450	0.24	1.13	134	273	276	53	94	85	5	
	1405	297.330	0.25	1.17	134	273	278	53	93	85	5	
	1410	300.272	0.25	1.17	134	273	280	54	93	85	5	
	1415	303.215	0.25	1.17	133	271	277	56	93	85	5	
	1420	306.150	0.24	1.13	133	271	274	58	94	85	5	
	1425	309.018	0.24	1.13	134	271	275	58	94	85	5	
	1430	311.980	0.28	1.32	135	273	276	58	94	85	5	
	1435	315.045	0.28	1.32	134	273	280	59	93	85	5	
	1440	318.012	0.28	1.32	134	273	278	60	93	85	5	
	1445	321.264	–	–	–	–	–	–	–	–	–	
			√ΔP=	0.518								
			0.518	1.25								
Avg.	–	60.404	~~0.270~~	~~0.270~~	133.0				87.7			
Check'd		AO	AO	AO	AO					AO		

CONSOLE # A161398

FILTER # Q-5790

AMBIENT TEMP. ~70

PROBE LENGTH 10'

LINER MATERIAL glass

Velocity

% Moisture

Flowrate (DSCFM)

Isokinetic (%)

REMARKS Heated transfer line @ 250°

Chain of Custody Records

For Samples Submitted to Radian FPAS Lab

RADIAN INTERNATIONAL
A DAMES & MOORE GROUP COMPANY

Jean Gusehang

ADDENDUM # 99- 0014

RECEIVED BY: DP Maxwell /

DATE RECEIVED: 1/5/99

UNPACKED DATE: 1/5/99

CLIENT CODE: Seymour-Hg

VOC SAMPLES SEE SECTION 1.0, 2.0 & 6.0 ☐YES

Number of Shipping Containers Received with Chain of Custody 1

Work Orders(s)		
9901047		

1.0 CONTAINERS EXAMINED UPON RECEIPT BY: JL 2

Container Sealed: ☑YES ☐NO

Container Seal Present: ☐YES ☑NO

Custody Seal Number Present: ☐YES ☑NO

Custody Seal Signed/Dated: ☐YES ☑NO

If seal not intact, list air bill number of that container(s).

2.0 VOC CANISTERS EXAMINED UPON RECEIPT N/A

Canister Valves Closed: ☐YES ☐NO

Canister Valves Capped: ☐YES ☐NO

Packing Material Used:

Samples Received Match Chain: ☐YES ☐NO

See additional comments: ☐YES ☐NO

Comments:

3.0 SAMPLE TEMPERATURE UPON RECEIPT: Ambient **PYROMETER#:** NA

The temperature of the container(s) is:

(acceptable tolerance 2-6 °C)

If temperature is outside acceptable tolerance, Client Services was notified (DPM CSC) list all ID's below.

Samples received do not require cooling DPM

OK to analyze samples: ☑YES ☐NO

PRESERVATION OF SAMPLES REQUIRED: ☑NA ☐YES VERIFIED BY: JL 2

Base samples are>pH 12: ☐YES ☐NO

Acid preserved are<pH 2: ☐YES ☐NO

Cyanide samples checked for sulfides: ☐YES

Sulfide samples appear to be preserved with zinc acetate: ☐YES ☐NO

Samples checked for chlorine per specification: ☐YES

Free Chlorine present: ☐YES ☐NO

If sample preservation/temperature (°C) is outside acceptable to tolerance, Client Services was notified (_____CSC) list all ID's below.

Field Sample ID	Analysis	pH/Temp

Field Sample ID	Analysis	pH/Temp

RADIAN INTERNATIONAL™

Chain of Custody Record

Page 1 of 1

PROJECT: Seymour- Hg

SITE: 66035702. 0202

PREPARED BY (Signature): DPMaxwell

9901047

FIELD SAMPLE I.D.	SAMPLE MATRIX	DATE/TIME	MS/MSD	NO. OF CONTAINERS	ANALYSES: Hg (HGCSSA)	REMARKS
Seymour Ash	Ash			1	✓	

REMARKS

RECEIVED BY:	DATE	TIME	RELINQUISHED BY:	DATE	TIME	RECEIVED BY:	DATE	TIME	RELINQUISHED BY:	DATE	TIME
DPMaxwell	1/5/99										

LAB USE ONLY

RECEIVED FOR LABORATORY BY:	DATE	TIME	AIRBILL NO.	OPENED BY:	DATE	TIME	TEMP°C	SEAL #	CONDITION
[illegible]	1/5/99	1700							

REMARKS: addendum 99-0014

IEG-4\FH\3-96-30337coc.FH5

RADIAN INTERNATIONAL

CHAIN OF CUSTODY ADDENDUM

ADDENDUM # 98- 2408

RECEIVED BY : Brandi Denny

DATE RECEIVED : 12/17/98

UNPACKED DATE: 12/18/98

CLIENT CODE : Seymour-Hg

VOC SAMPLES SEE SECTION 1.0 , 2.0 & 6.0 ☐ YES

Number of Shipping Containers Received with Chain : 3

Work Orders		
9812713		
742		
743		
744		
745		
746		

1.0 CONTAINERS EXAMINED UPON RECEIPT BY: BLD

Container Sealed: ☐ YES ☒ NO

Custody Seal Present: ☐ YES ☒ NO

Custody Seal Number Present: ☐ YES ☒ NO

Custody Seal Signed\Dated: ☐ YES ☒ NO

If seal not intact, list air bill number of container(s). hand delivered

2.0 VOC CANISTERS EXAMINED UPON RECEIPT

Canister Valves Closed : ☐ YES ☐ NO

Canister Valves Capped : ☐ YES ☐ NO

Samples Received Match Chain : ☐ YES ☐ NO

See additional comments : ☐ YES ☐ NO

Packing Material Used:

Comments:

3.0 SAMPLE TEMPERATURE/PRESERVATION UPON RECEIPT BLD **PYROMETER #** NA

The temperature of container(s): ambient

(acceptable tolerance 2 - 6 °C)

If temperature is outside acceptable tolerance, Client Services was notified (_____ CSC) list all ID's below

Samples do not require cooling :

OK to analyze samples: ☒ YES ☐ NO

PRESERVATION OF SAMPLES REQUIRED: ☒ NA ☐ YES **VERIFIED BY:** BLD

Base samples are >pH 12 : ☐ YES ☐ NO

Acid preserved are < pH2 : ☐ YES ☐ NO

Cyanide samples checked for sulfides: ☐ YES

Sulfide samples appear to be preserved with zinc acetate : ☐ YES ☐ NO

Samples checked for chlorine per specification: ☐ YES

Free Chlorine Present: ☐ YES ☐ NO

If sample preservation/temperature(°C) is outside acceptable tolerance, Client Services was notified (_____ CSC) list all ID's below

Field Sample ID	Analysis	pH/Temp

Field Sample ID	Analysis	pH/Temp

RADIAN CORPORATION

9812713, 742-746

Chain of Custody Record

Page 1 of 4

PROJECT: EPRI/Seymour Station

SITE: Seymour Power Plant

COLLECTED BY (Signature): Andrew 2. O Brien

FIELD SAMPLE I.D.	SAMPLE MATRIX	DATE/TIME	NO. OF CONTAINERS	ANALYSES: Hg, Cl⁻	ANALYSES: Hg							REMARKS	SAM ID NO. (for lab use only)
Seymour Coal-1	Coal	12/16/98	1	✓									
Seymour Coal 2	↓	↓	1	✓									
Seymour Coal-3	↓	↓	1	✓									
Filter Field Blank Seymour	Filter	12/3/98	1		✓								
1-In filter	↓	12/2/98	1		✓								
2-In	↓	↓	1		✓								
In-3	↓	12/3/98	1		✓								
1-Out	↓	12/2/98	1		✓								
2-Out	↓	↓	1		✓								

REMARKS

RELINQUISHED BY:	DATE	TIME
Andrew 2. O Brien	12/17/98	1650

RECEIVED BY:	DATE	TIME	RELINQUISHED BY:	DATE	TIME	RECEIVED BY:	DATE	TIME	RELINQUISHED BY:	DATE	TIME
[signature]	12/17	1650									

LAB USE ONLY

RECEIVED FOR LABORATORY BY:	DATE	TIME	AIRBILL NO.	OPENED BY:	DATE	TIME	TEMP°C	SEAL #	CONDITION
Brandi Denny	12/17	1650							

REMARKS: Add #98-~~0397~~ 2408 FEZ 12/20/98

4-88-30337

RADIAN CORPORATION

9812713, 742-746

Chain of Custody Record

PROJECT: EPRI/Seymour Station

SITE: Seymour Power Plant

COLLECTED BY (Signature): Andrew Z. O'Brien

FIELD SAMPLE I.D.	SAMPLE MATRIX	DATE/TIME	NO. OF CONTAINERS	ANALYSES: Hg								REMARKS	SAM ID NO (for lab use only)
AO out-3 filter	Filter	12/3/98	1	✓									
~~HNO3 H2O2/HNO3~~		~~12/2/98~~	~~1~~	✓									
HNO_3/H_2O_2 Field Blank		12/3/98	1	✓									
PR 1-out	HNO_3	12/2/98	1	✓									
PR 2-out	↓	↓	1	✓									
PR 3-out	↓	12/3/98	1	✓									
PR Field Blank Outlet	↓	12/3/98	1	✓									
PR 1-In	↓	12/2/98	1	✓									
PR 2-In	↓	↓	1	✓									

REMARKS:

RELINQUISHED BY:	DATE	TIME
Andrew Z O'Brien	12/17/98	1650

RECEIVED BY:	DATE	TIME	RELINQUISHED BY:	DATE	TIME	RECEIVED BY:	DATE	TIME	RELINQUISHED BY:	DATE	TIME
D Plaxwell	12/17	1650									

LAB USE ONLY

RECEIVED FOR LABORATORY BY:	DATE	TIME	AIRBILL NO.	OPENED BY:	DATE	TIME	TEMP°C	SEAL #	CONDITION
Brandi Denny	12/17	1650							

REMARKS: Add #98-~~2397~~ 2408 SCZ 12/22/98

4-88-30337

RADIAN CORPORATION

9812713, 742-746

Chain of Custody Record

PROJECT: EPRI/Seymour Station

SITE: Seymour Power Plant

COLLECTED BY (Signature): Andrew Z. O'Brien

FIELD SAMPLE I.D.	SAMPLE MATRIX	DATE/TIME	NO. OF CONTAINERS	Hg								REMARKS	SAM ID NO. (for lab use only)
PR-3-In	HNO_3	12/3/98	1	✓									
PR Field Blank Inlet	↓	↓	1	✓									
HNO_3/H_2O_2 1-In		12/2/98	1	✓									
HNO_3/H_2O_2 2-In		↓	1	✓									
HNO_3/H_2O_2 3-In		12/3/98	1	✓									
HNO_3/H_2O_2 1-out		12/2/98	1	✓									
HNO_3/H_2O_2 2-out		↓	1	✓									
HNO_3/H_2O_2 3-out		12/3/98	1	✓									
HCl 1-In		12/2/98	1	✓									

REMARKS

RELINQUISHED BY:	DATE	TIME
Andrew Z. O'Brien	12/17/98	1650

RECEIVED BY:	DATE	TIME	RELINQUISHED BY:	DATE	TIME	RECEIVED BY:	DATE	TIME	RELINQUISHED BY:	DATE	TIME
B. Blackwell	12/17	1650									

LAB USE ONLY

RECEIVED FOR LABORATORY BY:	DATE	TIME	AIRBILL NO.	OPENED BY:	DATE	TIME	TEMP°C	SEAL #	CONDITION
Donna Lemmon	12/17	1650							

REMARKS: Add #98-2397 2408 12/22/98

4-88-30337

RADIAN CORPORATION

9512713, 742-746

Chain of Custody Record

PROJECT: EPRI / Seymour Station

SITE: Seymour Power Plant

COLLECTED BY (Signature): Andrew Z. O'B

FIELD SAMPLE I.D.	SAMPLE MATRIX	DATE/TIME	NO. OF CONTAINERS	Hg								REMARKS	SAM ID NO. (for lab use only)
HCl 2-In		12/2/98	✓										
HCl 3-In		12/3/98	✓										
HCl 1-out		12/2/98	✓										
HCl 2-out		↓	✓										
HCl 3-out		12/3/98	✓										
HCl Field Blank		↓	✓										

REMARKS

RELINQUISHED BY:	DATE	TIME
Andrew Z. O'B	12/17/98	1650

RECEIVED BY:	DATE	TIME	RELINQUISHED BY:	DATE	TIME	RECEIVED BY:	DATE	TIME	RELINQUISHED BY:	DATE	TIME
D. Ridgwell	12/17	1650									

LAB USE ONLY

RECEIVED FOR LABORATORY BY:	DATE	TIME	AIRBILL NO.	OPENED BY:	DATE	TIME	TEMP°C	SEAL #	CONDITION
Diana Lemmy	12/17	1650							

REMARKS: Add #98-0397 2408 12/22/98

QUALITY CONTROL EXCEPTION REPORT
LEVEL 2 - ANALYTICAL

REPORT COPY 9812713

QCER # 990105-02

Revised: 01/05/99

Analyst: LESLIE KEARBY
Batch #: AAZ4990105085802
Prot Spec: 03 HGCS

Instrument: Z4
Matrix: microwave
Analysis File #: _____

Date Analyzed: 01/05/99
Status: C
Analyte: HGCS

Lab Sample ID:	Client ID:	CSC:	Project Sample ID:
9812713	SEYMOUR_HG	DPM	
9812714			

SAMPLE PREPARATION:

PROBLEM IDENTIFICATION

- Sample Went Dry _
- Loss of ____ % of Sample _
- Emulsion Formed _
- Blank Contamination _
- Instrument _
- Hold Time _
- MS/MSD Not Available _
- Instrument _
- Other (Describe) _

CORRECTIVE ACTION TAKEN

- Reprepare Sample _
- Sample Sent for Analysis _
- Resample _
- Other (Describe) _

Comments: _____

SAMPLE ANALYSIS:

PROBLEM IDENTIFICATION

- Surrogate Recovery _
- MS/MSD Recovery _
- LCS/LCSD Recovery _
- MS/MSD Precision _
- LCS/LCSD Precision _
- Standard _
- Blank Contamination _
- Instrument _
- Hold Time _
- No MS/MSD Available for Batch X
- Sample pH _
- Dil. Due to Hi-Level Non-Target Analytes _
- Serial Dilution _
- Analytical Spike X
- Internal Standard _
- Other (Describe) _

PROBABLE CAUSE

- Matrix Effect _
- Instrument _
- Spiking Error _
- Contamination _
- Coelution _
- Unknown X
- Other(Describe) _

CORRECTIVE ACTION TAKEN

- Reprepare Sample _
- Reanalyze Sample _
- Reanalyze LCS/LCSD _
- Recalibrate Instrument _
- Analyze Out of Hold Time _
- Prepare New Standard _
- Flag Data X
- Resample _
- Analyze by MSA _
- Perform Analytical Spike X
- No Action Required _
- Level 3 QCER to Follow _
- Other (Describe) _

Comments: Sample 9812713-02A
Analytical spike recovery was outside tolerances at 120%.
Analytical Spike Dup recovery was outside tolerances at 120%.
The RPD = 0%. The LCS/LCSD pair recovered within tolerances.

RADIAN CORPORATION

Chain of Custody Record

Page ____ of ____

PROJECT: EPRI/Seymour Station

SITE: Seymour Power Plant

COLLECTED BY (Signature): Andrew Z. Ob[illegible]

FIELD SAMPLE I.D.	SAMPLE MATRIX	DATE/TIME	NO. OF CONTAINERS	ANALYSES: H_2								REMARKS	SAM ID NO. (for lab use only)
Out-3 Filter	Filter	12/3/98	1	✓									
~~[illegible] H_2O_2/HNO_3~~		12/2/98	1	✓									
HNO_3/H_2O_2 Field Blank		12/3/98	1	✓									
PR 1 Out	HNO_3	12/2/98	1	✓									
PR 2 Out	↓	↓	1	✓									
PR 3 Out	↓	12/3/98	1	✓									
PR [illegible] Outlet	↓	12/3/98	1	✓									
PR 1 In	↓	12/2/98	1	✓									
PR 2 In	↓	↓	1	✓									

REMARKS:

RELINQUISHED BY:	DATE	TIME
Andrew Z. Ob[illegible]	1/17/[illegible]	[illegible]

RECEIVED BY:	DATE	TIME	RELINQUISHED BY:	DATE	TIME	RECEIVED BY:	DATE	TIME	RELINQUISHED BY:	DATE	TIME
[illegible]	12/17	1650									

LAB USE ONLY

RECEIVED FOR LABORATORY BY:	DATE	TIME	AIRBILL NO.	OPENED BY:	DATE	TIME	TEMP°C	SEAL #	CONDITION

REMARKS:

4-88-30337

RADIAN CORPORATION

Chain of Custody Record

Page 3 of 4

PROJECT: EPRI/Seymour [illegible]

SITE: Seymour Power Plant

COLLECTED BY (Signature): [illegible] 2.0 [illegible]

FIELD SAMPLE I.D.	SAMPLE MATRIX	DATE/TIME	NO. OF CONTAINERS	ANALYSES: Hg								REMARKS	SAM ID NO. (for lab use only)
PR-3-In	HNO_3	12/3/98	1	✓									
PR Field Blank Inlet	↓	↓	1	✓									
HNO_3/H_2O_2 1-In		12/2/98	1	✓									
HNO_3/H_2O_2 2-In		↓	1	✓									
HNO_3/H_2O_2 3-In		12/3/98	1	✓									
HNO_3/H_2O_2 1-Out		12/2/98	1	✓									
HNO_3/H_2O_2 2-Out		↓	1	✓									
HNO_3/H_2O_2 3-Out		12/3/98	1	✓									
HCl 1-In		12/2/98	1	✓									

REMARKS:

RELINQUISHED BY:	DATE	TIME
[illegible] 2.0 [illegible]	12/17/98	16[illegible]

RECEIVED BY:	DATE	TIME	RELINQUISHED BY:	DATE	TIME	RECEIVED BY:	DATE	TIME	RELINQUISHED BY:	DATE	TIME
[illegible]	12/17	1650									

LAB USE ONLY

RECEIVED FOR LABORATORY BY:	DATE	TIME	AIRBILL NO.	OPENED BY:	DATE	TIME	TEMP°C	SEAL #	CONDITION:

REMARKS:

4-88-30337

RADIAN CORPORATION

Chain of Custody Record

Page 4 of 4

PROJECT: EPRI/Seymour Station

SITE: Seymour Power Plant

COLLECTED BY (Signature): Cushen 2 OC

FIELD SAMPLE I.D.	SAMPLE MATRIX	DATE/TIME	NO. OF CONTAINERS	ANALYSES: Hg								REMARKS	SAM ID NO. (for lab use only)
HCl 2-In		12/2/98	✓										
HCl 3-In		12/3/98	✓										
HCl 1-out		12/2/98	✓										
HCl 2-out		↓	✓										
HCl 3-out		12/3/98	✓										
HCl Field Blank		↓											

REMARKS

RELINQUISHED BY:	DATE	TIME
Cushen 2 OC	12/17/98	1650

RECEIVED BY:	DATE	TIME	RELINQUISHED BY:	DATE	TIME	RECEIVED BY:	DATE	TIME	RELINQUISHED BY:	DATE	TIME
[signature]	12/17	1650									

LAB USE ONLY

RECEIVED FOR LABORATORY BY:	DATE	TIME	AIRBILL NO.	OPENED BY:	DATE	TIME	TEMP°C	SEAL #	CONDITION

REMARKS

4-88-30337

01/05/99 16:56:29

WORK ORDER SUMMARY

Report RADIAN INTERNATIONAL, LLC
To PO BOX 201088
AUSTIN, TX 78720-1088
Attention CARL RICHARDSON

Client Code SEYMOUR HG
Client DOE/EPRI
Facility SEYMOUR GENERATING STATION
Work ID MERCURY/CHLORIDE

Work Order # 9812745
Page 1

RCN 66035702.0202

Prepared Radian International, LLC
By 14046 Summit Dr., Bldg. B
P. O. Box 201088
Austin, TX 78720-1088

CSC DPMAXWELL

Case # NA
SDG # NA
RAS # 81201BDPM

New York ELAP ID #: 10915

Project Sample ID/ Description	Lab Sample ID	Test Code(s)	Method Desciption
SEYMOUR COAL-1	01A	PARRML00	Parr Bomb Ashing
	01B	HGCSSA00	Mercury by CVAAS
SEYMOUR COAL-2	02A	PARRML00	Parr Bomb Ashing
	02B	HGCSSA00	Mercury by CVAAS
SEYMOUR COAL-3	03A	PARRML00	Parr Bomb Ashing
	03B	HGCSSA00	Mercury by CVAAS
	04A MS	PARRML00	Parr Bomb Ashing
	04B MS	HGCSSA00	Mercury by CVAAS
	05A MSD	PARRML00	Parr Bomb Ashing
	05B MSD	HGCSSA00	Mercury by CVAAS
SARM 20	06A	PARRML00	Parr Bomb Ashing
	06B	HGCSSA00	Mercury by CVAAS

Coal Hg

WORK ORDER COMMENTS

Post digestion spikes not performed on all GFAAS analyses per Item 271 of the New York ELAP manual. Post digestion spikes were performed, as necessary, when recoveries for serial dilutions or matrix spikes for an analytical batch did not fall within recovery tolerances.

Hg Digestion Batch: GDIG990104101000
Digestion Date: 01/04/99

STATE CERTIFICATIONS

State	Agency	Certification ID
Arkansas	Department of Pollution Control and Ecology	
California	California Environmental Laboratory Accreditation Program	2257
Kansas	Kansas Department of Health and Environment	E-10165
Louisiana	Louisiana Department of Health and Hospitals	LA 97-29
North Carolina	Department of Environment, Health and Natural Resources	302
New Jersey	New Jersey Department of Environmental Protection	82005
New York	New York State Department of Health	10915
Oklahoma	Oklahoma Water Resources Board	8720
South Carolina	Department of Health and Environmental Control	82003001
Utah	Utah Department of Health	RADC
Wisconsin	Wisconsin Department of Natural Resources	99885260

FLAG DEFINITIONS

Flag	Definition
< DL	Result less than stated Detection Limit and greater than or equal to zero.
NA	Analyte concentration not available for this analysis.
NC	RPD and/or % Recovery not calculated. See Narrative for explanation.
ND	Not detected. No instrument response for analyte or result less than zero.
NR	Not reported. Result greater than or equal to stated Detection Limit and less than specified Reporting Limit.
NS	Analyte not spiked.
A	Presence of hydrocarbon mix eluting in the Lube Oil range. The pattern does not match that of Lube Oil.
B	Analyte detected in method blank at concentration greater than the Reporting Limit (and greater than zero).
C	Confirming data obtained using second GC column or GCMS.
D	Presence of hydrocarbon mix eluting in the Diesel range. The pattern does not match that of Diesel.
E	Analyte concentration exceeded calibration range.
F	Interference or coelution suspected. See Narrative for explanation.
G	Presence of hydrocarbon mix eluting in the Jet Fuel range. The pattern does not match that of Jet Fuel.
H	Presence of analyte previously confirmed by historical data.
I	Analyte identification suspect. See Narrative for explanation.
J	Result is less than stated Detection Limit but greater than or equal to specified Reporting Limit.
K	Peak did not meet method identification criteria. Analyte not detected on other GC column.
M	Result modified from previous Report. See Narrative for explanation.
P	Analyte not confirmed. Results from primary and secondary GC columns differ by greater than a factor of 3.
Q	QC result does not meet tolerance in Protocol Specification.
R	Result reported elsewhere.
S	Analyte concentration obtained using Method of Standard Additions (MSA).
T	Second column confirmational analysis not performed.
X	See Narrative for explanation.
Y	See Narrative for explanation.
Z	See Narrative for explanation.

ANALYTICAL PROTOCOL SUMMARY

Work Order # 9812745

Client DOE/EPRI

Facility SEYMOUR GENERATING STATION

Client Code SEYMOUR HG

Method Mercury by SW-846

Project Sample ID/Description	Lab Sample ID	Test Code(s)	Extraction/Digestion Batch #	Analysis Batch #
SARM 20	9812745-06B	HGCSSA00	GDIG981229150000	AAZ4__90105085801
SEYMOUR COAL-1	9812745-01B	HGCSSA00	GDIG981229150000	AAZ4__90105085801
SEYMOUR COAL-2	9812745-02B	HGCSSA00	GDIG981229150000	AAZ4__90105085801
SEYMOUR COAL-3	9812745-03B	HGCSSA00	GDIG981229150000	AAZ4__90105085801

RESULTS SUMMARY

Method Mercury by ASTM D3684

Test Code HGCSSA00

Project Sample ID:	SARM 20		SEYMOUR COAL-1		SEYMOUR COAL-2		SEYMOUR COAL-3	
Lab ID:	9812745-06B		9812745-01B		9812745-02B		9812745-03B	
File ID:	Z4010508-28		Z4010508-23		Z4010508-24		Z4010508-25	
Date Collected:			12/16/98		12/16/98		12/16/98	
Date Prepared:	01/04/99		01/04/99		01/04/99		01/04/99	
Date Analyzed:	01/05/99 10:09:00		01/05/99 09:56:00		01/05/99 09:59:00		01/05/99 10:01:00	
Dilution Factor:	1		1		1		1	
Matrix:	Solid		Solid		Solid		Solid	
Units:	mg/kg		mg/kg		mg/kg		mg/kg	
Report as:	dry weight		dry weight		dry weight		dry weight	
Column:								
Analyte	Conc.	DL	Conc.	DL	Conc.	DL	Conc.	DL
Mercury	0.232 B	0.00607	0.139 B	0.00726	0.115 B	0.00719	0.114 B	0.00720

01/05/99 16:56:29

INITIAL CALIBRATION

Work Order # 9812745

Page 7

Initial Calibration # Z4990105085800

Calibration Date 01/05/99 08:58:00

Sol'n #

Method Mercury by SW-846

Test Code HGCSWA00

Instrument Z4

Analyst LAK

Reviewer LKH

Analytes	Response Area Counts Reference Conc. mg/L	Response Area Counts Reference Conc. mg/L	Response Area Counts Reference Conc. mg/L	Response Area Counts Reference Conc. mg/L	Response Area Counts Reference Conc. mg/L	Response Area Counts Reference Conc. mg/L	Response Area Counts Reference Conc. mg/L	Correlation Coefficient
Mercury	0.000 0	0.0035446 0.0005	0.0066211 0.001	0.0126738 0.002	0.0267857 0.004	0.0668806 0.010	0.1355002 0.020	1.000

Specification Limits for correlation coefficient >0.995

01/05/99 16:56:29

DIGESTION BATCH SUMMARY

Digestion Batch # GDIG981229150000

Work Order # 9812745

Method Parr bomb ashing

Test Code PARRML00

Extraction Start Date/Time 12/29/98 15:00:00

Extraction Stop Date/Time

Analyst HD

Reviewer DL

Sample	Project Sample ID	Lab Sample ID	Sample Size g	Cleanup Method
1		9812709-01A	1.0010	
2		9812709-02A	0.9967	
3		9812709-03A	0.9997	
4		9812709-06A	1.0016	
5	SEYMOUR COAL-1	9812745-01A	1.0002	
6	SEYMOUR COAL-2	9812745-02A	1.0007	
7	SEYMOUR COAL-3	9812745-03A	1.0014	
8	SARM 20	9812745-06A	1.0005	
9				
10				
11				
12				
13				
14				
15				
16				
17				
18				
19				
20				

Quality Control	Project Sample ID	Lab Sample ID	Sample Size g	Cleanup Method
Blank		BLK984629	--	
Laboratory Control Sample		LCS987082	--	
Laboratory Control Sample Duplicate		LCSD987082	--	
Matrix Spike		9812709-04A	1.002	
Matrix Spike Duplicate		9812709-05A	1.005	
Matrix Spike	SEYMOUR COAL-3	9812745-04A	0.9975	
Matrix Spike Duplicate	SEYMOUR COAL-3	9812745-05A	1.0027	

01/05/99 16:56:29

ANALYSIS BATCH SUMMARY

Analysis Batch # AAZ4 90105085801

Work Order # 9812745

Method Mercury by SW-846
Test Code HGCSWA00
Initial Calibration # Z4990105085800
Calibration Date 01/05/99

Analysis Start Date/Time 01/05/99 08:58:00
Analysis Stop Date/Time 01/05/99 13:09:00

Instrument Z4
Analyst LAK
Reviewer LKH

Sequence/Analysis Time		Project Sample ID	Lab Sample ID	Sample Type	Analysis File #
1	01/05/99 08:57:00		S_0	Initial Calibration Blank	Z4010508-1
2	01/05/99 09:00:00		S_05	Initial Calibration Standard 1	Z4010508-2
3	01/05/99 09:02:00		S_1	Initial Calibration Standard 2	Z4010508-3
4	01/05/99 09:05:00		S_2	Initial Calibration Standard 3	Z4010508-4
5	01/05/99 09:07:00		S_4	Initial Calibration Standard 4	Z4010508-5
6	01/05/99 09:10:00		S_10	Initial Calibration Standard 5	Z4010508-6
7	01/05/99 09:12:00		S_20	Initial Calibration Standard 6	Z4010508-7
8	01/05/99 09:17:00		ICV	Initial Calibration Verification	Z4010508-8
9	01/05/99 09:19:00		ICB	Blank, Initial Calibration	Z4010508-9
10	01/05/99 09:22:00		BLK997	Blank, Method	Z4010508-10
11	01/05/99 09:24:00		LCS997	Lab Control Sample	Z4010508-11
12	01/05/99 09:27:00		LCSD997	Lab Control Sample Duplicate	Z4010508-12
13	01/05/99 09:31:00		LCSD997	Lab Control Sample Duplicate	Z4010508-13
14	01/05/99 09:33:00		9812709-01B	Sample	Z4010508-14
15	01/05/99 09:36:00		9812709-02B	Sample	Z4010508-15
16	01/05/99 09:38:00		9812709-03B	Sample	Z4010508-16
17	01/05/99 09:41:00		9812709-03B	Serial Dilutions	Z4010508-17
18	01/05/99 09:43:00		9812709-03B	Analytical Spike	Z4010508-18
19	01/05/99 09:46:00		9812709-04B	Matrix Spike	Z4010508-19
20	01/05/99 09:48:00		9812709-05B	Matrix Spike Duplicate	Z4010508-20
21	01/05/99 09:51:00		9812709-06B	Sample	Z4010508-21
22	01/05/99 09:53:00	SEYMOUR COAL-1	9812745-01B	Sample	Z4010508-22
23	01/05/99 09:56:00	SEYMOUR COAL-1	9812745-01B	Sample	Z4010508-23
24	01/05/99 09:59:00	SEYMOUR COAL-2	9812745-02B	Sample	Z4010508-24
25	01/05/99 10:01:00	SEYMOUR COAL-3	9812745-03B	Sample	Z4010508-25
26	01/05/99 10:04:00	SEYMOUR COAL-3	9812745-04B	Matrix Spike	Z4010508-26
27	01/05/99 10:06:00	SEYMOUR COAL-3	9812745-05B	Matrix Spike Duplicate	Z4010508-27
28	01/05/99 10:09:00	SARM 20	9812745-06B	Sample	Z4010508-28
29	01/05/99 10:11:00		CCV	Continuing Calibration Verification	Z4010508-29
30	01/05/99 10:14:00		CCB	Blank, Continuing Calibration	Z4010508-30

RESULTS

Digestion Batch # GDIG981229150000
Analysis Batch # AAZ4 90105085801

Work Order # 9812745

Project Sample ID SEYMOUR COAL-1
Lab Sample ID 9812745-01B
File # Z4010508-23
Method Mercury by ASTM D3684
Test Code HGCSSA00

Date Collected 12/16/98
Date Received 12/17/98
Date Prepared 01/04/99
Date Analyzed 01/05/99 09:56:00

Instrument Z4
Column
Analyst LAK
Reviewer LKH

Reporting Subset
Spikes Subset
Specs Subset

Matrix S
Report As dry weight
% Moisture 21.50

Aliquot Mass/Volume 1.0002 (g)
Extract/Digestate Volume 100 (mL)
Dilution Factor 1

Analyte	CAS #	Measured Concentration mg/kg	Detection Limit mg/kg	Reporting Limit mg/kg
Mercury	7439-97-6	0.139 B	0.00726	0

RESULTS

Digestion Batch # GDIG981229150000
Analysis Batch # AAZ4 90105085801

Project Sample ID SEYMOUR COAL-2
Lab Sample ID 9812745-02B
File # Z4010508-24
Method Mercury by ASTM D3684
Test Code HGCSSA00

Date Collected 12/16/98
Date Received 12/17/98
Date Prepared 01/04/99
Date Analyzed 01/05/99 09:59:00

Instrument Z4
Column
Analyst LAK
Reviewer LKH

Reporting Subset
Spikes Subset
Specs Subset

Matrix S
Report As dry weight
% Moisture 20.83

Analyte	CAS #	Aliquot Mass/Volume 1.0007 (g) Extract/Digestate Volume 100 (mL) Dilution Factor 1 Measured Concentration mg/kg	Detection Limit mg/kg	Reporting Limit mg/kg
Mercury	7439-97-6	0.115 B	0.00719	0

RESULTS

Digestion Batch # GDIG981229150000
Analysis Batch # AAZ4 90105085801

Project Sample ID SEYMOUR COAL-3
Lab Sample ID 9812745-03B
File # Z4010508-25
Method Mercury by ASTM D3684
Test Code HGCSSA00

Date Collected 12/16/98
Date Received 12/17/98
Date Prepared 01/04/99
Date Analyzed 01/05/99 10:01:00

Instrument Z4
Column
Analyst LAK
Reviewer LKH

Reporting Subset
Spikes Subset
Specs Subset

Matrix S
Report As dry weight
% Moisture 20.87

Aliquot Mass/Volume 1.0014 (g)
Extract/Digestate Volume 100 (mL)
Dilution Factor 1

Analyte	CAS #	Measured Concentration mg/kg	Detection Limit mg/kg	Reporting Limit mg/kg
Mercury	7439-97-6	0.114 B	0.00720	0

RESULTS

Digestion Batch # GDIG981229150000
Analysis Batch # AAZ4 90105085801

Project Sample ID SARM 20
Lab Sample ID 9812745-06B
File # Z4010508-28
Method Mercury by ASTM D3684
Test Code HGCSSA00

Date Collected
Date Received 12/17/98
Date Prepared 01/04/99
Date Analyzed 01/05/99 10:09:00

Instrument Z4
Column
Analyst LAK
Reviewer LKH

Reporting Subset
Spikes Subset
Specs Subset

Matrix S
Report As dry weight
% Moisture 6.14

Aliquot Mass/Volume 1.0005 (g)
Extract/Digestate Volume 100 (mL)
Dilution Factor 1

Analyte	CAS #	Measured Concentration mg/kg	Detection Limit mg/kg	Reporting Limit mg/kg
Mercury	7439-97-6	0.232 B	0.00607	0

LABORATORY BLANK INFORMATION

Work Order # 9812745

Digestion Batch # GDIG990104100000

Analysis Batch # AAZ4 90105085801

Lab Sample ID CCB

File # Z4010508-30

Method Mercury by SW7470A

Test Code HGCSWA00

Date Prepared 01/04/99

Date Analyzed 01/05/99 10:14:00

Instrument Z4

Column

Analyst LAK

Reviewer LKH

Reporting Subset

Spikes Subset

Specs Subset

Matrix W

Analyte	Aliquot Mass/Volume 50 (mL) Extract/Digestate Volume 50 (mL) Dilution Factor 1 Measured Conc. mg/L	Detection Limit mg/L	Reporting Limit mg/L
Mercury	0.0000500 J	0.000057	.1000

LABORATORY BLANK INFORMATION

Digestion Batch # GDIG990104100000
Analysis Batch # AAZ4 90105085800

Lab Sample ID ICB
File # Z4010508-9
Method Mercury by SW7470A
Test Code HGCSWA00

Date Prepared 01/04/99
Date Analyzed 01/05/99 09:19:00

Instrument Z4
Column
Analyst LAK
Reviewer LKH

Reporting Subset
Spikes Subset
Specs Subset

Matrix W

Analyte	Aliquot Mass/Volume 50 (mL) Extract/Digestate Volume 50 (mL) Dilution Factor 1 Measured Conc. mg/L	Detection Limit mg/L	Reporting Limit mg/L
Mercury	0.0000400 J	0.000057	.1000

LABORATORY BLANK INFORMATION

Digestion Batch # GDIG981229150000
Analysis Batch # AAZ4 90105085801

Lab Sample ID BLK997
File # Z4010508-10
Method Mercury by SW7471A
Test Code HGCSSA00

Date Prepared 01/04/99
Date Analyzed 01/05/99 09:22:00

Instrument Z4
Column
Analyst LAK
Reviewer LKH

Reporting Subset
Spikes Subset
Specs Subset

Matrix S

Analyte	Aliquot Mass/Volume 1.000 (g) Extract/Digestate Volume 100 (mL) Dilution Factor 1 Measured Conc. mg/kg	Detection Limit mg/kg	Reporting Limit mg/kg
Mercury	0.00700	0.00570	0

01/05/99 16:56:29

LABORATORY CONTROL SAMPLE

Digestion Batch # GDIG981229150000

Analysis Batch # AAZ4 90105085801

Work Order # 9812745

Page 17

Method Mercury by SW7470A

Test Code HGCSWA00

Date Prepared 01/04/99

Date Analyzed 01/05/99 09:31:00

Instrument Z4

Column

Analyst LAK

Reviewer LKH

Reporting Subset

Spikes Subset

Specs Subset

Matrix W

Report As

% Moisture

Aliquot Mass or Vol 100 (mL)

Extract Mass or Vol 100 (mL)

Control Std. #	Vol. Added	Surrogate Sol'n #	Vol. Added

Analyte	LCS Lab Sample ID LCS997 File ID Z4010508-11			LCS Duplicate Lab Sample ID LCSD997 File ID Z4010508-13			Recovery Spec. Limits		RPD	
	Spiked Conc. mg/L	Measured Conc. mg/L	Rec. %	Spiked Conc. mg/L	Measured Conc. mg/L	Rec. %	Low %	High %	Result %	Spec. Limit %
Mercury	0.0100	0.00965	96	0.0100	0.00891	89	82	123	7.6	13

01/05/99 16:56:29

MATRIX SPIKE(S)

Digestion Batch # GDIG981229150000

Analysis Batch # AAZ4 90105085801

Work Order # 9812745

Project Sample ID

Method Mercury by ASTM D3684

Test Code HGCSSA00

Date Collected 12/16/98

Date Received 12/17/98

Date Prepared 01/04/99

Date Analyzed 01/05/99 09:48:00

Instrument Z4

Column

Analyst LAK

Reviewer LKH

Reporting Subset

Spikes Subset

Specs Subset

Matrix S

Report As dry weight

% Moisture 24.46

Spike Sol'n # Vol. Added

Surrogate Sol'n Vol. Added

Sample	Spiked Sample	Spiked Sample Dup	Recovery Specification Limits	RPD
Lab Sample ID 9812709-03B	Lab Sample ID 9812709-04B MS	Lab Sample ID 9812709-05B MSD		
File # Z4010508-16	File # Z4010508-19	File # Z4010508-20		
Aliquot Mass/Vol 0.9997 (g)	Aliquot Mass/Vol 1.002 (g)	Aliquot Mass/Vol 1.005 (g)		
Extract Mass/Vol 100 (mL)	Extract Mass/Vol 100 (mL)	Extract Mass/Vol 100 (mL)		
Dil Fact. 1	Dil Fact. 1	Dil Fact. 1		

Analyte	Spike Sol'n Conc. mg/L	Measured Conc. mg/kg	Spiked Conc. mg/kg	Measured Conc. mg/kg	Rec. %	Spiked Conc. mg/kg	Measured Conc. mg/kg	Rec. %	Low %	High %	Result %	Specification Limit %
Mercury	0.002	0.221 B	0.264	0.490	102	0.264	0.484	100	70	130	2.0	25

01/05/99 16:56:29

MATRIX SPIKE(S)

Digestion Batch # GDIG981229150000

Analysis Batch # AAZ4 90105085801

Work Order # 9812745

Project Sample ID SEYMOUR COAL 3

Method Mercury by ASTM D3684

Test Code HGCSSA00

Date Collected 12/16/98

Date Received 12/17/98

Date Prepared 01/04/99

Date Analyzed 01/05/99 10:06:00

Instrument Z4

Column

Analyst LAK

Reviewer LKH

Reporting Subset

Spikes Subset

Specs Subset

Matrix S

Report As dry weight

% Moisture 20.87

Spike Sol'n #	Vol. Added
Surrogate Sol'n	**Vol. Added**

Sample	Spiked Sample	Spiked Sample Dup
Lab Sample ID 9812745-03B	Lab Sample ID 9812745-04B MS	Lab Sample ID 9812745-05B MSD
File # Z4010508-25	File # Z4010508-26	File # Z4010508-27
Aliquot Mass/Vol 1.0014 (g)	Aliquot Mass/Vol 0.9975 (g)	Aliquot Mass/Vol 1.0027 (g)
Extract Mass/Vol 100 (mL)	Extract Mass/Vol 100 (mL)	Extract Mass/Vol 100 (mL)
Dil Fact. 1	Dil Fact. 1	Dil Fact. 1

Analyte	Spike Sol'n Conc. mg/L	Sample Measured Conc. mg/kg	Spiked Sample Spiked Conc. mg/kg	Spiked Sample Measured Conc. mg/kg	Spiked Sample Rec. %	Spiked Sample Dup Spiked Conc. mg/kg	Spiked Sample Dup Measured Conc. mg/kg	Spiked Sample Dup Rec. %	Recovery Specification Limits Low %	Recovery Specification Limits High %	RPD Result %	RPD Specification Limit %
Mercury	0.002	0.114 B	0.253	0.376	104	0.252	0.378	105	70	130	0.96	25

CONTINUING (OR DAILY) CALIBRATION VERIFICATION

Work Order # 9812745

Analysis Batch # AAZ4 90105085801

Initial Calibration # Z4990105085800

Lab Sample ID CCV

File # Z4010508-29

Method Mercury by SW7470A

Test Code HGCSWA00

Date Analyzed 01/05/99 10:11:00

Reporting Subset ___

Spikes Subset ___

Specs Subset ___

Instrument Z4

Analyst LAK

Reviewer LKH

Analyte	Measured Concentration mg/L	Reference Concentration mg/L	Recovery %	Recovery Specification Limits	
				Low %	High %
Mercury	0.00995	0.0100	100	90	110

CONTINUING (OR DAILY) CALIBRATION VERIFICATION

Work Order # 9812745

Analysis Batch # AAZ4 90105085800

Initial Calibration # Z4990105085800

Lab Sample ID ICV

File # Z4010508-8

Method Mercury by SW7470A

Test Code HGCSWA00

Date Analyzed 01/05/99 09:17:00

Reporting Subset ___

Spikes Subset ___

Specs Subset ___

Instrument Z4

Analyst LAK

Reviewer LKH

Analyte	Measured Concentration mg/L	Reference Concentration mg/L	Recovery %	Recovery Specification Limits	
				Low %	High %
Mercury	0.00951	0.0100	95	90	110

01/05/99 16:56:29

ANALYTICAL SPIKE(S)

Digestion Batch # GDIG981229150000

Analysis Batch # AAZ4 90105085801

Work Order # 9812745

Page 22

Project Sample ID

Method Mercury by ASTM D3684

Test Code HGCSSA00

Date Collected 12/16/98

Date Received 12/17/98

Date Prepared 01/04/99

Date Analyzed 01/05/99 09:43:00

Instrument Z4

Column

Analyst LAK

Reviewer LKH

Reporting Subset

Spikes Subset

Specs Subset

Matrix S

Report As dry weight

% Moisture 24.46

Spike Sol'n #	Vol. Added
Surrogate Sol'n	**Vol. Added**

Sample	Spiked Sample	Spiked Sample Dup
Lab Sample ID 9812709-03B	Lab Sample ID 9812709-03B	Lab Sample ID
File # Z4010508-16	File # Z4010508-18	File #
Aliquot Mass/Vol 0.9997 (g)	Aliquot Mass/Vol 0.9997 (g)	Aliquot Mass/Vol
Extract Mass/Vol 100 (mL)	Extract Mass/Vol 100 (mL)	Extract Mass/Vol
Dil Fact. 1	Dil Fact. 1.25	Dil Fact.

Analyte	Spike Sol'n Conc. mg/L	Measured Conc. mg/kg	Spiked Conc. mg/kg	Measured Conc. mg/kg	Rec. %	Spiked Conc.	Measured Conc.	Rec. %	Recovery Specification Limits Low %	High %	RPD Result %	Specification Limit %
Mercury	0.002	0.221 B	0.331	0.547	98				85	115		

01/05/99 16:56:29

SERIAL DILUTION CHECK

Digestion Batch # GDIG981229150000

Analysis Batch # AAZ4 90105085801

Work Order # 9812745

Project Sample ID

Method Mercury by ASTM D3684

Test Code HGCSSA00

Date Prepared 01/04/99

Date Analyzed 01/05/99 09:41:00

Instrument Z4

Analyst LAK

Reviewer LKH

Reporting Subset

Spikes Subset

Specs Subset

Matrix S

Report As dry weight

	Sample Result Lab Sample ID 9812709-03B Dilution Factor 1		Diluted Sample Result Lab Sample ID 9812709-03B Dilution Factor 5		% Difference	
Analyte	Measured Concentration mg/kg	Detection Limit mg/kg	Measured Concentration mg/kg	Detection Limit mg/kg	Result	Specification Limit %
Mercury	0.221 B	0.00755	0.265	0.0378	20 Q	10

ANALYTICAL PROTOCOL SUMMARY
COMMENTS/NARRATIVE

Method Mercury by SW-846 Specification# MGCS

Lab Sample ID File ID	Project Sample ID/Description	Analyte	Flag	Comment/Narrative	Corrective Action

11:28 59

RADIAN ANALYTICAL SERVICES
FPAS REPORT
TABLE OF CONTENTS

Work Order # 9812746

Client DOE/EPRI
Facility SEYMOUR GENERATING STATION
Client Code SEYMOUR HG

Certified By Mary C McFarl
Date 1/8/99

Report Form	Analytical Batch ID	Pages From	Pages To
Work Order Summary		1	1
State Certifications		2	2
Flag Definitions		3	3
Protocol Summary for IC, EPA 300.0		4	4
Results Summary		5	5
Extraction Batch Summary		6	6
Analysis Batch Summary	WLX10090106085701	7	7
Results		8	11
Laboratory Blank Information		12	12
Laboratory Control Samples		13	14
Matrix Spikes		15	16
Calibration Verification		17	18
Comments/Narrative		19	19
Quality Control Exception Report Summary		20	20

Cond Chloride

ANALYTICAL PROTOCOL SUMMARY

Work Order # 9812746

Client DOE/EPRI

Facility SEYMOUR GENERATING STATION

Client Code SEYMOUR HG

Method IC, EPA 300.0

Project Sample ID/Description	Lab Sample ID	Test Code(s)	Extraction/Digestion Batch #	Analysis Batch #
SARM 20	9812746-06B	XXIESACL	SOIL990104140000	WLX10090106085701
SEYMOUR COAL 1	9812746-01B	XXIESACL	SOIL990104140000	WLX10090106085701
SEYMOUR COAL 2	9812746-02B	XXIESACL	SOIL990104140000	WLX10090106085701
SEYMOUR COAL 3	9812746-03B	XXIESACL	SOIL990104140000	WLX10090106085701

RESULTS SUMMARY

Method IC, EPA 300.0
Test Code XXIESACL

Project Sample ID:	SARM 20		SEYMOUR COAL-1		SEYMOUR COAL-2		SEYMOUR COAL-3	
Lab ID:	9812746-06B		9812746-01B		9812746-02B		9812746-03B	
File ID:	X1000106-25		X1000106-20		X1000106-21		X1000106-22	
Date Collected:			12/16/98		12/16/98		12/16/98	
Date Prepared:								
Date Analyzed:	01/06/99 16:09:38		01/06/99 14:51:25		01/06/99 15:07:05		01/06/99 15:22:43	
Dilution Factor:	1		1		1		1	
Matrix:	Solid		Solid		Solid		Solid	
Units:	mg/kg		mg/kg		mg/kg		mg/kg	
Report as:	dry weight		dry weight		dry weight		dry weight	
Column:								
Analyte	Conc.	DL	Conc.	DL	Conc.	DL	Conc.	DL
Chloride	60.1 B	1.57	21.7 B	1.87	19.0 B	1.86	18.6 B	1.86

EXTRACTION BATCH SUMMARY

Extraction Batch # SOIL990104140000

Work Order # 9812746

Method Parr bomb ashing

Test Code PARRWL00

Extraction Start Date/Time 01/04/99 14:00:00

Extraction Stop Date/Time 01/04/99 23:00:00

Analyst RDO

Reviewer ___

Sample	Project Sample ID	Lab Sample ID	Sample Size g	Cleanup Method
1		9812712-01A	1.0028	
2		9812712-02A	1.0005	
3		9812712-03A	1.0002	
4		9812712-06A	1.0088	
5	SEYMOUR COAL-1	9812746-01A	1.0039	
6	SEYMOUR COAL-2	9812746-02A	1.0020	
7	SEYMOUR COAL-3	9812746-03A	1.0035	
8	SARM 20	9812746-06A	1.0021	
9				
10				
11				
12				
13				
14				
15				
16				
17				
18				
19				
20				

Quality Control	Project Sample ID	Lab Sample ID	Sample Size g	Cleanup Method
Blank		BLK9922	1.00	
Laboratory Control Sample		LCS9922	100	
Laboratory Control Sample Duplicate		LCSD9922	100	
Laboratory Control Sample		LCS9935	100	
Laboratory Control Sample Duplicate		LCSD9935	100	
Matrix Spike		9812712-04A	1.0035	
Matrix Spike Duplicate		9812712-05A	1.0016	
Matrix Spike	SEYMOUR COAL-3	9812746-04A	1.0045	
Matrix Spike Duplicate	SEYMOUR COAL-3	9812746-05A	1.0042	

ANALYSIS BATCH SUMMARY

Analysis Batch # WLX10090106085701

Work Order # 9812746

Method IC, EPA 300.0
Test Code XXIEWACL
Initial Calibration # NA
Calibration Date

Analysis Start Date/Time 01/06/99 08:57:00
Analysis Stop Date/Time 01/06/99 19:45:54

Instrument X100
Analyst DLC
Reviewer ACR

Sequence/Analysis Time		Project Sample ID	Lab Sample ID	Sample Type	Analysis File #
1	01/06/99 11:29:57		autocal1r	Initial Calibration Standard 1	X1000106-2
2	01/06/99 09:27:42		autocal2r	Initial Calibration Standard 2	X1000106-3
3	01/06/99 09:42:53		autocal3r	Initial Calibration Standard 3	X1000106-4
4	01/06/99 09:58:05		autocal4r	Initial Calibration Standard 4	X1000106-5
5	01/06/99 10:13:17		autocal5r	Initial Calibration Standard 5	X1000106-6
6	01/06/99 11:08:19		autocal6r	Initial Calibration Standard 6	X1000106-7
7	01/06/99 11:45:57		ICV	Initial Calibration Verification	X1000106-8
8	01/06/99 12:01:34		BLK9922	Blank, Method	X1000106-9
9	01/06/99 12:16:46		LCS9922	Lab Control Sample	X1000106-10
10	01/06/99 12:31:57		LCSD9922	Lab Control Sample Duplicate	X1000106-11
11	01/06/99 12:47:09		LCS9935	Lab Control Sample	X1000106-12
12	01/06/99 13:02:21		LCSD9935	Lab Control Sample Duplicate	X1000106-13
13	01/06/99 13:17:33		9812712-01B	Sample	X1000106-14
14	01/06/99 13:33:12		9812712-02B	Sample	X1000106-15
15	01/06/99 13:48:50		9812712-03B	Sample	X1000106-16
16	01/06/99 14:04:29		9812712-04B	Matrix Spike	X1000106-17
17	01/06/99 14:20:06		9812712-05B	Matrix Spike Duplicate	X1000106-18
18	01/06/99 14:35:46		9812712-06B	Sample	X1000106-19
19	01/06/99 14:51:25	SEYMOUR COAL-1	9812746-01B	Sample	X1000106-20
20	01/06/99 15:07:05	SEYMOUR COAL-2	9812746-02B	Sample	X1000106-21
21	01/06/99 15:22:43	SEYMOUR COAL-3	9812746-03B	Sample	X1000106-22
22	01/06/99 15:38:22	SEYMOUR COAL-3	9812746-04B	Matrix Spike	X1000106-23
23	01/06/99 15:54:02	SEYMOUR COAL-3	9812746-05B	Matrix Spike Duplicate	X1000106-24
24	01/06/99 16:09:38	SARM 20	9812746-06B	Sample	X1000106-25
25	01/06/99 16:25:17		CCV	Continuing Calibration Verification	X1000106-26

RESULTS

Digestion Batch # SOIL990104140000
Analysis Batch # WLX10090106085701

Project Sample ID SEYMOUR COAL-1
Lab Sample ID 9812746-01B
File # X1000106-20
Method IC, EPA 300.0
Test Code XXIESACL

Date Collected 12/16/98
Date Received 12/17/98
Date Prepared
Date Analyzed 01/06/99 14:51:25

Instrument X100
Column
Analyst DLC
Reviewer ACR

Reporting Subset
Spikes Subset
Specs Subset

Matrix S
Report As dry weight
% Moisture 21.50

Aliquot Mass/Volume 1.0039 (g)
Extract/Digestate Volume 100 (mL)
Dilution Factor 1

Analyte	CAS #	Measured Concentration mg/kg	Detection Limit mg/kg	Reporting Limit mg/kg
Chloride	7782-50-5	21.7 B	1.87	0

RESULTS

Digestion Batch # SOIL990104140000
Analysis Batch # WLX10090106085701

Project Sample ID SEYMOUR COAL-2
Lab Sample ID 9812746-02B
File # X1000106-21
Method IC, EPA 300.0
Test Code XXIESACL

Date Collected 12/16/98
Date Received 12/17/98
Date Prepared
Date Analyzed 01/06/99 15:07:05

Instrument X100
Column
Analyst DLC
Reviewer ACR

Reporting Subset
Spikes Subset
Specs Subset

Matrix S
Report As dry weight
% Moisture 20.83

Analyte	CAS #	Aliquot Mass/Volume 1.0020 (g) Extract/Digestate Volume 100 (mL) Dilution Factor 1 — Measured Concentration mg/kg	Detection Limit mg/kg	Reporting Limit mg/kg
Chloride	7782-50-5	19.0 B	1.86	0

RESULTS

Digestion Batch # SOIL990104140000
Analysis Batch # WLX10090106085701

Work Order # 9812746

Project Sample ID SEYMOUR COAL-3
Lab Sample ID 9812746-03B
File # X1000106-22
Method IC, EPA 300.0
Test Code XXIESACL

Date Collected 12/16/98
Date Received 12/17/98
Date Prepared
Date Analyzed 01/06/99 15:22:43

Instrument X100
Column
Analyst DLC
Reviewer ACR

Reporting Subset
Spikes Subset
Specs Subset

Matrix S
Report As dry weight
% Moisture 20.87

Aliquot Mass/Volume 1.0035 (g)
Extract/Digestate Volume 100 (mL)
Dilution Factor 1

Analyte	CAS #	Measured Concentration mg/kg	Detection Limit mg/kg	Reporting Limit mg/kg
Chloride	7782-50-5	18.6 B	1.86	0

RESULTS

Digestion Batch # SOIL990104140000
Analysis Batch # WLX10090106085701

Project Sample ID SARM 20
Lab Sample ID 9812746-06B
File # X1000106-25
Method IC, EPA 300.0
Test Code XXIESACL

Date Collected
Date Received 12/17/98
Date Prepared
Date Analyzed 01/06/99 16:09:38

Instrument X100
Column
Analyst DLC
Reviewer ACR

Reporting Subset
Spikes Subset
Specs Subset

Matrix S
Report As dry weight
% Moisture 6.14

Analyte	CAS #	Aliquot Mass/Volume 1.0021 (g) Extract/Digestate Volume 100 (mL) Dilution Factor 1 Measured Concentration mg/kg	Detection Limit mg/kg	Reporting Limit mg/kg
Chloride	7782-50-5	60.1 B	1.57	0

LABORATORY BLANK INFORMATION

Digestion Batch # SOIL990104140000
Analysis Batch # WLX10090106085701

Lab Sample ID BLK9922
File # X1000106-9
Method IC, EPA 300.0
Test Code XXIESACL

Date Prepared
Date Analyzed 01/06/99 12:01:34

Instrument X100
Column
Analyst DLC
Reviewer ACR

Reporting Subset
Spikes Subset
Specs Subset

Matrix S

Analyte	Aliquot Mass/Volume 1.00 (g) Extract/Digestate Volume 100 (mL) Dilution Factor 1 Measured Conc. mg/kg	Detection Limit mg/kg	Reporting Limit mg/kg
Chloride	14.0 Q	1.47	0

01/08/99 11:28:59

LABORATORY CONTROL SAMPLE

Digestion Batch # SOIL990104140000

Analysis Batch # WLX10090106085701

Work Order # 9812746

Page 13

Method IC, EPA 300.0

Test Code XXIEWACL

Date Prepared

Date Analyzed 01/06/99 12:31:57

Instrument X100

Column

Analyst DLC

Reviewer ACR

Reporting Subset

Spikes Subset

Specs Subset

Matrix W

Report As received

% Moisture

Aliquot Mass or Vol 100 (mL)

Extract Mass or Vol 100 (mL)

Control Std. #	Vol. Added	Surrogate Sol'n #	Vol. Added
B32208P43B			

Analyte	LCS Lab Sample ID LCS9922 File ID X1000106-10			LCS Duplicate Lab Sample ID LCSD9922 File ID X1000106-11			Recovery Spec. Limits		RPD	
	Spiked Conc. mg/L	Measured Conc. mg/L	Rec. %	Spiked Conc. mg/L	Measured Conc. mg/L	Rec. %	Low %	High %	Result %	Spec. Limit %
Chloride	8.00	7.80	97	8.00	8.37	105	83	112	7.9	10

01/08/99 11:28:59

LABORATORY CONTROL SAMPLE

Digestion Batch # SOIL990104140000

Analysis Batch # WLX10090106085701

Work Order # 9812746

Method IC, EPA 300.0

Test Code XXIEWACL

Date Prepared

Date Analyzed 01/06/99 13:02:21

Instrument X100

Column

Analyst DLC

Reviewer ACR

Reporting Subset

Spikes Subset

Specs Subset

Matrix W

Report As received

% Moisture

Aliquot Mass or Vol 100 (mL)

Extract Mass or Vol 100 (mL)

Control Std. #	Vol. Added	Surrogate Sol'n #	Vol. Added
B32208P43B			

Analyte	LCS Lab Sample ID LCS9935 File ID X1000106-12			LCS Duplicate Lab Sample ID LCSD9935 File ID X1000106-13			Recovery Spec. Limits		RPD	
	Spiked Conc. mg/L	Measured Conc. mg/L	Rec. %	Spiked Conc. mg/L	Measured Conc. mg/L	Rec. %	Low %	High %	Result %	Spec. Limit %
Chloride	8.00	8.09	101	8.00	7.98	100	83	112	1.00	10

01/08/99 11:28:59

MATRIX SPIKE(S)

Digestion Batch # SOIL990104140000

Analysis Batch # WLX10090106085701

Work Order # 9812746

Page 15

Project Sample ID

Method IC, EPA 300.0

Test Code XXIESACL

Date Collected 12/16/98

Date Received 12/17/98

Date Prepared

Date Analyzed 01/06/99 14:20:06

Instrument X100

Column

Analyst DLC

Reviewer ACR

Reporting Subset

Spikes Subset

Specs Subset

Matrix S

Report As dry weight

% Moisture 24.46

Spike Sol'n #	Vol. Added
Surrogate Sol'n	**Vol. Added**

Sample Lab Sample ID 9812712-03B
File # X1000106-16
Aliquot Mass/Vol 1.0002 (g)
Extract Mass/Vol 100 (mL)
Dil Fact. 1

Spiked Sample Lab Sample ID 9812712-04B MS
File # X1000106-17
Aliquot Mass/Vol 1.0035 (g)
Extract Mass/Vol 100 (mL)
Dil Fact. 1

Spiked Sample Dup Lab Sample ID 9812712-05B MSD
File # X1000106-18
Aliquot Mass/Vol 1.0016 (g)
Extract Mass/Vol 100 (mL)
Dil Fact. 1

Analyte	Spike Sol'n Conc. mg/kg	Measured Conc. mg/kg	Spiked Conc. mg/kg	Measured Conc. mg/kg	Rec. %	Spiked Conc. mg/kg	Measured Conc. mg/kg	Rec. %	Recovery Specification Limits Low %	High %	RPD Result %	Specification Limit %
Chloride		28.8 B	528	519	93	529	509	91	83	112	2.2	10

MATRIX SPIKE(S)

Digestion Batch # SOIL990104140000
Analysis Batch # WLX10090106085701

Work Order # 9812746

Project Sample ID SEYMOUR COAL-3
Method IC, EPA 300.0
Test Code XXIESACL

Date Collected 12/16/98
Date Received 12/17/98
Date Prepared
Date Analyzed 01/06/99 15:54:02

Instrument X100
Column
Analyst DLC
Reviewer ACR

Reporting Subset
Spikes Subset
Specs Subset

Matrix S
Report As dry weight
% Moisture 20.87

Spike Sol'n #	Vol. Added
B32208P43A	
Surrogate Sol'n	**Vol. Added**

Sample	Spiked Sample	Spiked Sample Dup
Lab Sample ID 9812746-03B	Lab Sample ID 9812746-04B MS	Lab Sample ID 9812746-05B MSD
File # X1000106-22	File # X1000106-23	File # X1000106-24
Aliquot Mass/Vol 1.0035 (g)	Aliquot Mass/Vol 1.0045 (g)	Aliquot Mass/Vol 1.0042 (g)
Extract Mass/Vol 100 (mL)	Extract Mass/Vol 100 (mL)	Extract Mass/Vol 100 (mL)
Dil Fact. 1	Dil Fact. 1	Dil Fact. 1

Analyte	Spike Sol'n Conc. mg/L	Measured Conc. mg/kg	Spiked Conc. mg/kg	Measured Conc. mg/kg	Rec. %	Spiked Conc. mg/kg	Measured Conc. mg/kg	Rec. %	Recovery Specification Limits Low %	High %	RPD Result %	Specification Limit %
Chloride	200	18.6 B	503	468	89	504	457	91	83	112	2.2	10

CONTINUING (OR DAILY) CALIBRATION VERIFICATION

Work Order # 9812746

Analysis Batch # WLX10090106085700

Initial Calibration # NA

Lab Sample ID CCV

File # X1000106-26

Method IC, EPA 300.0

Test Code XXIEWACL

Date Analyzed 01/06/99 16:25:17

Reporting Subset ___

Spikes Subset ___

Specs Subset ___

Instrument X100

Analyst DLC

Reviewer ACR

Analyte	Measured Concentration mg/L	Reference Concentration mg/L	Recovery %	Recovery Specification Limits	
				Low %	High %
Chloride	5.75	6.00	96	95	105

CONTINUING (OR DAILY) CALIBRATION VERIFICATION

Work Order # 9812746

Analysis Batch # WLX10090106085701

Initial Calibration # NA

Lab Sample ID ICV

File # X1000106-8

Method IC, EPA 300.0

Test Code XXIEWACL

Date Analyzed 01/06/99 11:45:57

Reporting Subset ___

Spikes Subset ___

Specs Subset ___

Instrument X100

Analyst DLC

Reviewer ACR

Analyte	Measured Concentration mg/L	Reference Concentration mg/L	Recovery %	Recovery Specification Limits	
				Low %	High %
Chloride	5.94	6.00	99	95	105

ANALYTICAL PROTOCOL SUMMARY
COMMENTS/NARRATIVE

Method IC, EPA 300.0 Specification# XXIE

Lab Sample ID File ID	Project Sample ID/Description	Analyte	Flag	Comment/Narrative	Corrective Action

QUALITY CONTROL EXCEPTION REPORT
SUMMARY

QCER #	Analysis Batch Number
990106-04	WLX10090106085700

QUALITY CONTROL EXCEPTION REPORT
LEVEL 2 - ANALYTICAL

REPORT COPY 981274

QCER # 990106-04

Revised: 01/08/9

Analyst: DLCARRUTHERS Instrument: DX100 Date Analyzed: 01/06/9
Batch #: WLX10090106085700 Matrix: SOLID Status: C
Prot Spec: XXIES 00 Analysis File #: jan06b.sch Analyte: CL

Lab Sample ID:	Client ID:	CSC:	Project Sample ID:
9812712			
9812746	SEYMOUR_HG	DPM	

SAMPLE PREPARATION:

PROBLEM IDENTIFICATION

- Sample Went Dry _
- Loss of ____ % of Sample _
- Emulsion Formed _
- Blank Contamination _
- Instrument _
- Hold Time _
- MS/MSD Not Available _
- Instrument _
- Other (Describe) _

CORRECTIVE ACTION TAKEN

- Reprepare Sample _
- Sample Sent for Analysis X
- Resample _
- Other (Describe) _

Comments:

SAMPLE ANALYSIS:

PROBLEM IDENTIFICATION

- Surrogate Recovery _
- MS/MSD Recovery _
- LCS/LCSD Recovery _
- MS/MSD Precision _
- LCS/LCSD Precision _
- Standard _
- Blank Contamination X
- Instrument _
- Hold Time _
- No MS/MSD Available for Batch _
- Sample pH _
- Dil. Due to Hi-Level Non-Target Analytes _
- Serial Dilution _
- Analytical Spike _
- Internal Standard _
- Other (Describe) _

PROBABLE CAUSE

- Matrix Effect X
- Instrument _
- Spiking Error _
- Contamination _
- Coelution _
- Unknown _
- Other(Describe) X

PARRBOMB PREP

CORRECTIVE ACTION TAKEN

- Reprepare Sample _
- Reanalyze Sample _
- Reanalyze LCS/LCSD _
- Recalibrate Instrument _
- Analyze Out of Hold Time _
- Prepare New Standard _
- Flag Data X
- Resample _
- Analyze by MSA _
- Perform Analytical Spike _
- No Action Required _
- Level 3 QCER to Follow _
- Other (Describe) _

Comments: BLK9922 AT 14.0 mg/kg, tolerance 10.0 mg/kg.Samples were flagged.

Distribution: CSC, Lab, Report

12/30/98 08:52:21

RADIAN ANALYTICAL SERVICES
FPAS REPORT
TABLE OF CONTENTS

Work Order # 9812744

Client DOE/EPRI
Facility SEYMOUR GENERATING STATION
Client Code SEYMOUR HG

Certified By [signature]
Date 12-30-98

Report Form	Analytical Batch ID	Pages From	Pages To
Work Order Summary		1	1
State Certifications		2	2
Flag Definitions		3	3
Protocol Summary for Percent moisture, SW846		4	4
Results Summary		5	6
Analysis Batch Summary	EXMSRS81228165201	7	7
Results		8	12
Sample Duplicates		13	14
Comments/Narrative		15	15

Coal – Moisture

12/30/98 08:52:21

WORK ORDER SUMMARY

Report RADIAN INTERNATIONAL, LLC
To PO BOX 201088
AUSTIN, TX 78720-1088
Attention CARL RICHARDSON

Client Code SEYMOUR HG
Client DOE/EPRI
Facility SEYMOUR GENERATING STATION
Work ID MERCURY/CHLORIDE

Work Order # 9812744
Page 1

RCN 66035702.0202

Prepared Radian International, LLC
By 14046 Summit Dr., Bldg. B
P. O. Box 201088
Austin, TX 78720-1088

CSC DPMAXWELL

Case # NA
SDG # NA
RAS # 81201BDPM

New York ELAP ID #: 10915

Project Sample ID/ Description	Lab Sample ID	Test Code(s)	Method Desciption
SEYMOUR COAL-1	01A	MSRSSA00	Percent Moisture SW846
SEYMOUR COAL-2	02A	MSRSSA00	Percent Moisture SW846
SEYMOUR COAL-3	03A	MSRSSA00	Percent Moisture SW846
	04A DUP	MSRSSA00	Percent Moisture SW846
SARM 20	05A	MSRSSA00	Percent Moisture SW846

STATE CERTIFICATIONS

State	Agency	Certification ID
Arkansas	Department of Pollution Control and Ecology	
California	California Environmental Laboratory Accreditation Program	2257
Kansas	Kansas Department of Health and Environment	E-10165
Louisiana	Louisiana Department of Health and Hospitals	LA 97-29
North Carolina	Department of Environment, Health and Natural Resources	302
New Jersey	New Jersey Department of Environmental Protection	82005
New York	New York State Department of Health	10915
Oklahoma	Oklahoma Water Resources Board	8720
South Carolina	Department of Health and Environmental Control	82003001
Utah	Utah Department of Health	RADC
Wisconsin	Wisconsin Department of Natural Resources	99885260

FLAG DEFINITIONS

Flag	Definition
< DL	Result less than stated Detection Limit and greater than or equal to zero.
NA	Analyte concentration not available for this analysis.
NC	RPD and/or % Recovery not calculated. See Narrative for explanation.
ND	Not detected. No instrument response for analyte or result less than zero.
NR	Not reported. Result greater than or equal to stated Detection Limit and less than specified Reporting Limit.
NS	Analyte not spiked.
A	Presence of hydrocarbon mix eluting in the Lube Oil range. The pattern does not match that of Lube Oil.
B	Analyte detected in method blank at concentration greater than the Reporting Limit (and greater than zero).
C	Confirming data obtained using second GC column or GCMS.
D	Presence of hydrocarbon mix eluting in the Diesel range. The pattern does not match that of Diesel.
E	Analyte concentration exceeded calibration range.
F	Interference or coelution suspected. See Narrative for explanation.
G	Presence of hydrocarbon mix eluting in the Jet Fuel range. The pattern does not match that of Jet Fuel.
H	Presence of analyte previously confirmed by historical data.
I	Analyte identification suspect. See Narrative for explanation.
J	Result is less than stated Detection Limit but greater than or equal to specified Reporting Limit.
K	Peak did not meet method identification criteria. Analyte not detected on other GC column.
M	Result modified from previous Report. See Narrative for explanation.
P	Analyte not confirmed. Results from primary and secondary GC columns differ by greater than a factor of 3.
Q	QC result does not meet tolerance in Protocol Specification.
R	Result reported elsewhere.
S	Analyte concentration obtained using Method of Standard Additions (MSA).
T	Second column confirmational analysis not performed.
X	See Narrative for explanation.
Y	See Narrative for explanation.
Z	See Narrative for explanation.

ANALYTICAL PROTOCOL SUMMARY

Work Order # 9812744

Client DOE/EPRI

Facility SEYMOUR GENERATING STATION

Client Code SEYMOUR HG

Method Percent moisture, SW846

Project Sample ID/Description	Lab Sample ID	Test Code(s)	Extraction/Digestion Batch #	Analysis Batch #
SARM 20	9812744-05A	MSRSSA00	NA	EXMSRS81228165201
SEYMOUR COAL-1	9812744-01A	MSRSSA00	NA	EXMSRS81228165201
SEYMOUR COAL-2	9812744-02A	MSRSSA00	NA	EXMSRS81228165201
SEYMOUR COAL-3	9812744-03A	MSRSSA00	NA	EXMSRS81228165201
SEYMOUR COAL-3	9812744-04A	MSRSSA00	NA	EXMSRS81228165201

RESULTS SUMMARY

Method Percent moisture, SW846

Test Code MSRSSA00

Project Sample ID:	SARM 20		SEYMOUR COAL-1		SEYMOUR COAL-2		SEYMOUR COAL-3	
Lab ID:	9812744-05A		9812744-01A		9812744-02A		9812744-03A	
File ID:	MSRS122816-10		MSRS122816-6		MSRS122816-7		MSRS122816-8	
Date Collected:			12/16/98		12/16/98		12/16/98	
Date Prepared:								
Date Analyzed:	12/28/98 16:52		12/28/98 16:52		12/28/98 16:52		12/28/98 16:52	
Dilution Factor:	1		1		1		1	
Matrix:	Solid		Solid		Solid		Solid	
Units:	%		%		%		%	
Report as:								
Column:								
Analyte	Conc.	DL	Conc.	DL	Conc.	DL	Conc.	DL
Percent moisture	6.14		21.5		20.8		20.9	

RESULTS SUMMARY (Cont'd)

Method Percent moisture, SW846
Test Code MSRSSA00

Project Sample ID:	SEYMOUR COAL-3							
Lab ID:	9812744-04A DUP							
File ID:	MSRS122816-9							
Date Collected:	12/16/98							
Date Prepared:								
Date Analyzed:	12/28/98 16:52:00							
Dilution Factor:	1							
Matrix:	Solid							
Units:	%							
Report as:								
Column:								
Analyte	Conc.	DL	Conc.	DL	Conc.	DL	Conc.	DL
Percent moisture	20.6							

ANALYSIS BATCH SUMMARY

Analysis Batch # EXMSRS81228165201

Work Order # 9812744

Method Percent moisture, SW846
Test Code MSRSSA00
Initial Calibration # NA
Calibration Date NA

Analysis Start Date/Time 12/28/98 16:52:00
Analysis Stop Date/Time 12/29/98 16:45:00

Instrument MSRS
Analyst MLD
Reviewer

Sequence/Analysis Time		Project Sample ID	Lab Sample ID	Sample Type	Analysis File #
1	12/28/98 16:52		9812710-01A	Sample	MSRS122816-1
2	12/28/98 16:52		9812710-02A	Sample	MSRS122816-2
3	12/28/98 16:52		9812710-03A	Sample	MSRS122816-3
4	12/28/98 16:52:00		9812710-04A	Sample Duplicate	MSRS122816-4
5	12/28/98 16:52		9812710-05A	Sample	MSRS122816-5
6	12/28/98 16:52	SEYMOUR COAL-1	9812744-01A	Sample	MSRS122816-6
7	12/28/98 16:52	SEYMOUR COAL-2	9812744-02A	Sample	MSRS122816-7
8	12/28/98 16:52	SEYMOUR COAL-3	9812744-03A	Sample	MSRS122816-8
9	12/28/98 16:52:00	SEYMOUR COAL-3	9812744-04A	Sample Duplicate	MSRS122816-9
10	12/28/98 16:52	SARM 20	9812744-05A	Sample	MSRS122816-10

RESULTS

Extraction Batch # _____

Analysis Batch # EXMSRS81228165201

Project Sample ID SEYMOUR COAL-1
Lab Sample ID 9812744-01A
File # MSRS122816-6
Method Percent moisture, SW846
Test Code MSRSSA00

Date Collected 12/16/98
Date Received 12/17/98
Date Prepared _____
Date Analyzed 12/28/98 16:52

Instrument MSRS
Column _____
Analyst MLD
Reviewer _____

Reporting Subset ___
Spikes Subset ___
Specs Subset ___

Matrix S
Report As NA
% Moisture NA

Analyte	CAS #	Aliquot Mass/Volume _____ (g) Extract/Digestate Volume _____ (mL) Dilution Factor 1 — Measured Concentration %	Detection Limit	Reporting Limit
Percent moisture	NO_CAS	21.5		

RESULTS

Extraction Batch # _____

Analysis Batch # EXMSRS81228165201

Work Order # 9812744

Project Sample ID SEYMOUR COAL-2
Lab Sample ID 9812744-02A
File # MSRS122816-7
Method Percent moisture, SW846
Test Code MSRSSA00

Date Collected 12/16/98
Date Received 12/17/98
Date Prepared _____
Date Analyzed 12/28/98 16:52

Instrument MSRS
Column _____
Analyst MLD
Reviewer _____

Reporting Subset ___
Spikes Subset ___
Specs Subset ___

Matrix S
Report As NA
% Moisture NA

Analyte	CAS #	Aliquot Mass/Volume _____ (g) Extract/Digestate Volume _____ (mL) Dilution Factor 1 Measured Concentration %	Detection Limit	Reporting Limit
Percent moisture	NO_CAS	20.8		

RESULTS

Extraction Batch # _____

Analysis Batch # EXMSRS81228165201

Work Order # 9812744

Project Sample ID SEYMOUR COAL-3
Lab Sample ID 9812744-03A
File # MSRS122816-8
Method Percent moisture, SW846
Test Code MSRSSA00

Date Collected 12/16/98
Date Received 12/17/98
Date Prepared _____
Date Analyzed 12/28/98 16:52

Instrument MSRS
Column _____
Analyst MLD
Reviewer _____

Reporting Subset ___
Spikes Subset ___
Specs Subset ___

Matrix S
Report As NA
% Moisture NA

Analyte	CAS #	Aliquot Mass/Volume _____ (g) Extract/Digestate Volume _____ (mL) Dilution Factor 1 Measured Concentration %	Detection Limit	Reporting Limit
Percent moisture	NO_CAS	20.9		

RESULTS

Extraction Batch # _____

Analysis Batch # EXMSRS81228165201

Project Sample ID SARM 20
Lab Sample ID 9812744-05A
File # MSRS122816-10
Method Percent moisture, SW846
Test Code MSRSSA00

Date Collected _____
Date Received 12/17/98
Date Prepared _____
Date Analyzed 12/28/98 16:52

Instrument MSRS
Column _____
Analyst MLD
Reviewer _____

Reporting Subset ___
Spikes Subset ___
Specs Subset ___

Matrix S
Report As NA
% Moisture NA

Analyte	CAS #	Aliquot Mass/Volume _____ (g) Extract/Digestate Volume _____ (mL) Dilution Factor 1 Measured Concentration %	Detection Limit	Reporting Limit
Percent moisture	NO_CAS	6.14		

RESULTS

Extraction Batch # _____

Analysis Batch # EXMSRS81228165201

Project Sample ID SEYMOUR COAL-3
Lab Sample ID 9812744-04A DUP
File # MSRS122816-9
Method Percent moisture, SW846
Test Code MSRSSA00

Date Collected 12/16/98
Date Received 12/17/98
Date Prepared _____
Date Analyzed 12/28/98 16:52:00

Instrument MSRS
Column _____
Analyst MLD
Reviewer _____

Reporting Subset ___
Spikes Subset ___
Specs Subset ___

Matrix S
Report As NA
% Moisture NA

Aliquot Mass/Volume _____ (g)
Extract/Digestate Volume 1 (mL)
Dilution Factor 1

Analyte	CAS #	Measured Concentration %	Detection Limit	Reporting Limit
Percent moisture	NO_CAS	20.6		

SAMPLE DUPLICATES

Extraction Batch # _____

Analysis Batch # EXMSRS81228165201

Project Sample ID _____

Method Percent moisture, SW846

Test Code MSRSSA00

Date Collected 12/16/98

Date Received 12/17/98

Date Prepared _____

Date Analyzed 12/28/98 16:52:00

Instrument MSRS

Column _____

Analyst MLD

Reviewer _____

Reporting Subset ___

Spikes Subset ___

Specs Subset ___

Matrix S

Report As _____

	Sample Lab Sample ID 9812710-03A Dil Fact. 1	Duplicate Lab Sample ID 9812710-04A DUP Dil Fact. 1	RPD	
Analyte	Measured Conc. %	Measured Conc. %	Result	Specification Limit %
Percent moisture	24.5	24.6	0.61	20

12/30/98 08:52:21

SAMPLE DUPLICATES

Extraction Batch # _____

Analysis Batch # EXMSRS81228165201

Work Order # 9812744

Page 14

Project Sample ID SEYMOUR COAL-3
Method Percent moisture, SW846
Test Code MSRSSA00

Date Collected 12/16/98
Date Received 12/17/98
Date Prepared _____
Date Analyzed 12/28/98 16:52:00

Instrument MSRS
Column _____
Analyst MLD
Reviewer _____

Reporting Subset ___
Spikes Subset ___
Specs Subset ___

Matrix S
Report As _____

	Sample Lab Sample ID 9812744-03A Dil Fact. 1	Duplicate Lab Sample ID 9812744-04A DUP Dil Fact. 1	RPD	
Analyte	Measured Conc. %	Measured Conc. %	Result	Specification Limit %
Percent moisture	20.9	20.6	1.6	20

ANALYTICAL PROTOCOL SUMMARY
COMMENTS/NARRATIVE

Method Percent moisture, SW846 Specification# MSRS D

Lab Sample ID File ID	Project Sample ID/Description	Analyte	Flag	Comment/Narrative	Corrective Action

01/11/99 16:44:17

RADIAN ANALYTICAL SERVICES
FPAS REPORT
TABLE OF CONTENTS

Work Order # 9901047

Client DOE/EPRI
Facility SEYMOUR GENERATING STATION
Client Code SEYMOUR HG

Certified By Linda Carter
Date 1/12/99

Report Form	Analytical Batch ID	Pages From	Pages To
Work Order Summary		1	1
Work Order Comments		2	2
State Certifications		3	3
Flag Definitions		4	4
Protocol Summary for Mercury by SW-846		5	5
Results Summary		6	6
Initial Calibration		7	7
Extraction Batch Summary		8	8
Analysis Batch Summary	AAZ4__90111091702	9	9
Results		10	10
Laboratory Blank Information		11	14
Laboratory Control Samples		15	15
Matrix Spikes		16	16
Calibration Verification		17	19
Analytical Spikes		20	20
Serial Dilutions		21	21
Comments/Narrative		22	22

Fly Ash Hg

01/11/99 16:44:17

WORK ORDER SUMMARY

Report RADIAN INTERNATIONAL, LLC
To PO BOX 201088
AUSTIN, TX 78720-1088
Attention CARL RICHARDSON

Client Code SEYMOUR HG
Client DOE/EPRI
Facility SEYMOUR GENERATING STATION
Work ID MERCURY/CHLORIDE

Work Order # 9901047
Page 1

RCN 66035702.0202

Prepared Radian International, LLC
By 14046 Summit Dr., Bldg. B
P. O. Box 201088
Austin, TX 78720-1088

CSC DPMAXWELL

Case # NA
SDG # NA
RAS # 81201BDPM

New York ELAP ID #: 10915

Project Sample ID/ Description	Lab Sample ID	Test Code(s)	Method Desciption
SEYMOUR ASH	01A	HGCSSA00	Mercury by CVAAS

WORK ORDER COMMENTS

Post digestion spikes not performed on all GFAAS analyses per Item 271 of the New York ELAP manual. Post digestion spikes were performed, as necessary, when recoveries for serial dilutions or matrix spikes for an analytical batch did not fall within recovery tolerances.

STATE CERTIFICATIONS

State	Agency	Certification ID
Arkansas	Department of Pollution Control and Ecology	
California	California Environmental Laboratory Accreditation Program	2257
Kansas	Kansas Department of Health and Environment	E-10165
Louisiana	Louisiana Department of Health and Hospitals	LA 97-29
North Carolina	Department of Environment, Health and Natural Resources	302
New Jersey	New Jersey Department of Environmental Protection	82005
New York	New York State Department of Health	10915
Oklahoma	Oklahoma Water Resources Board	8720
South Carolina	Department of Health and Environmental Control	82003001
Utah	Utah Department of Health	RADC
Wisconsin	Wisconsin Department of Natural Resources	99885260

ANALYTICAL PROTOCOL SUMMARY

FLAG DEFINITIONS

Flag	Definition
< DL	Result less than stated Detection Limit and greater than or equal to zero.
NA	Analyte concentration not available for this analysis.
NC	RPD and/or % Recovery not calculated. See Narrative for explanation.
ND	Not detected. No instrument response for analyte or result less than zero.
NR	Not reported. Result greater than or equal to stated Detection Limit and less than specified Reporting Limit.
NS	Analyte not spiked.
A	Presence of hydrocarbon mix eluting in the Lube Oil range. The pattern does not match that of Lube Oil.
B	Analyte detected in method blank at concentration greater than the Reporting Limit (and greater than zero).
C	Confirming data obtained using second GC column or GCMS.
D	Presence of hydrocarbon mix eluting in the Diesel range. The pattern does not match that of Diesel.
E	Analyte concentration exceeded calibration range.
F	Interference or coelution suspected. See Narrative for explanation.
G	Presence of hydrocarbon mix eluting in the Jet Fuel range. The pattern does not match that of Jet Fuel.
H	Presence of analyte previously confirmed by historical data.
I	Analyte identification suspect. See Narrative for explanation.
J	Result is less than stated Detection Limit but greater than or equal to specified Reporting Limit.
K	Peak did not meet method identification criteria. Analyte not detected on other GC column.
M	Result modified from previous Report. See Narrative for explanation.
P	Analyte not confirmed. Results from primary and secondary GC columns differ by greater than a factor of 3.
Q	QC result does not meet tolerance in Protocol Specification.
R	Result reported elsewhere.
S	Analyte concentration obtained using Method of Standard Additions (MSA).
T	Second column confirmational analysis not performed.
X	See Narrative for explanation.
Y	See Narrative for explanation.
Z	See Narrative for explanation.

ANALYTICAL PROTOCOL SUMMARY

Client DOE/EPRI
Facility SEYMOUR GENERATING STATION
Client Code SEYMOUR HG
Method Mercury by SW-846

Project Sample ID/Description	Lab Sample ID	Test Code(s)	Extraction/Digestion Batch #	Analysis Batch #
SEYMOUR ASH	9901047-01A	HGCSSA00	GDIG990108102000	AAZ4__90111091702

RESULTS SUMMARY

Method Mercury by SW7471A

Test Code HGCSSA00

Project Sample ID:	SEYMOUR ASH							
Lab ID:	9901047-01A							
File ID:	Z4011109-39							
Date Collected:								
Date Prepared:	01/08/99							
Date Analyzed:	01/11/99 10:53:00							
Dilution Factor:	1							
Matrix:	Solid							
Units:	mg/kg							
Report as:	recieved							
Column:								
Analyte	Conc.	DL	Conc.	DL	Conc.	DL	Conc.	DL
Mercury	0.0198 B	0.00259						

01/11/99 16:44:17

INITIAL CALIBRATION

Work Order # 9901047

Page 7

Initial Calibration # Z4990111091700

Calibration Date 01/11/99 09:17:00

Sol'n #

Method Mercury by SW-846

Test Code HGCSWA00

Instrument Z4

Analyst LAK

Reviewer LKH

Analytes	Response Area Counts Reference Conc. mg/L	Response Area Counts Reference Conc. mg/L	Response Area Counts Reference Conc. mg/L	Response Area Counts Reference Conc. mg/L	Response Area Counts Reference Conc. mg/L	Response Area Counts Reference Conc. mg/L	Response Area Counts Reference Conc. mg/L	Correlation Coefficient
Mercury	0.000 0	0.0032771 0.0005	0.0066546 0.001	0.0136102 0.002	0.0256152 0.004	0.0714619 0.010	0.1392455 0.020	1.000

Specification Limits for correlation coefficient >0.995

01/11/99 16:44:17

DIGESTION BATCH SUMMARY

Digestion Batch # GDIG990108102000

Work Order # 990104[illegible]

Page [illegible]

Method Digestion by SW7471A

Test Code DHGSSA00

Extraction Start Date/Time 01/08/99 10:20:00

Extraction Stop Date/Time

Analyst RWG

Reviewer LAK

Sample	Project Sample ID	Lab Sample ID	Sample Size g	Cleanup Method
1	SEYMOUR ASH	9901047-01A	0.58	
2		9901048-01A	0.58	
3		9901049-01A	0.52	
4		9901049-02A	0.53	
5				
6				
7				
8				
9				
10				
11				
12				
13				
14				
15				
16				
17				
18				
19				
20				

Quality Control	Project Sample ID	Lab Sample ID	Sample Size g	Cleanup Method
Blank		BLK9950	0.50	
Detectability Check Sample		DCS9965	50	
Laboratory Control Sample		LCS9966	50	
Laboratory Control Sample Duplicate		LCSD9966	50	
Matrix Spike		9901049-03A	0.52	
Matrix Spike Duplicate		9901049-04A	0.58	

01/11/99 16:44:17

ANALYSIS BATCH SUMMARY

Analysis Batch # AAZ4 90111091702

Work Order # 9901047

Page 2

Method Mercury by SW-846
Test Code HGCSWA00
Initial Calibration # Z4990111091700
Calibration Date 01/11/99

Analysis Start Date/Time 01/11/99 09:17:00
Analysis Stop Date/Time 01/11/99 12:05:00

Instrument Z4
Analyst LAK
Reviewer LKH

Sequence/Analysis Time		Project Sample ID	Lab Sample ID	Sample Type	Analysis File #
1	01/11/99 09:16:00		S_0	Initial Calibration Blank	Z4011109-1
2	01/11/99 09:19:00		S_05	Initial Calibration Standard 1	Z4011109-2
3	01/11/99 09:21:00		S_1	Initial Calibration Standard 2	Z4011109-3
4	01/11/99 09:24:00		S_2	Initial Calibration Standard 3	Z4011109-4
5	01/11/99 09:26:00		S_4	Initial Calibration Standard 4	Z4011109-5
6	01/11/99 09:29:00		S_10	Initial Calibration Standard 5	Z4011109-6
7	01/11/99 09:31:00		S_20	Initial Calibration Standard 6	Z4011109-7
8	01/11/99 09:35:00		ICV	Initial Calibration Verification	Z4011109-8
9	01/11/99 09:38:00		ICB	Blank, Initial Calibration	Z4011109-9
33	01/11/99 10:38:00		CCV	Continuing Calibration Verification	Z4011109-33
34	01/11/99 10:40:00		CCB	Blank, Continuing Calibration	Z4011109-34
35	01/11/99 10:43:00		BLK9950	Blank, Method	Z4011109-35
36	01/11/99 10:45:00		DCS9965	Detectability Check Sample	Z4011109-36
37	01/11/99 10:48:00		LCS9966	Lab Control Sample	Z4011109-37
38	01/11/99 10:50:00		LCSD9966	Lab Control Sample Duplicate	Z4011109-38
39	01/11/99 10:53:00	SEYMOUR ASH	9901047-01A	Sample	Z4011109-39
40	01/11/99 10:55:00		9901048-01A	Sample	Z4011109-40
41	01/11/99 10:58:00		9901049-01A	Sample	Z4011109-41
42	01/11/99 11:00:00		9901049-01A	Serial Dilutions	Z4011109-42
43	01/11/99 11:03:00		9901049-01A	Analytical Spike	Z4011109-43
44	01/11/99 11:05:00		9901049-03A	Matrix Spike	Z4011109-44
45	01/11/99 11:08:00		9901049-04A	Matrix Spike Duplicate	Z4011109-45
46	01/11/99 11:10:00		9901049-02A	Sample	Z4011109-46
47	01/11/99 11:13:00		CCV	Continuing Calibration Verification	Z4011109-47
48	01/11/99 11:15:00		CCB	Blank, Continuing Calibration	Z4011109-48

[EPA SWA 7471A method]

RESULTS

Digestion Batch # GDIG990108102000
Analysis Batch # AAZ4 90111091702

Work Order # 990104[illegible]

Project Sample ID SEYMOUR ASH
Lab Sample ID 9901047-01A
File # Z4011109-39
Method Mercury by SW7471A
Test Code HGCSSA00

Date Collected
Date Received 01/05/99
Date Prepared 01/08/99
Date Analyzed 01/11/99 10:53:00

Instrument Z4
Column
Analyst LAK
Reviewer LKH

Reporting Subset
Spikes Subset
Specs Subset

Matrix S
Report As recieved
% Moisture

Analyte	CAS #	Aliquot Mass/Volume 0.58 (g) Extract/Digestate Volume 50 (mL) Dilution Factor 1 — Measured Concentration mg/kg	Detection Limit mg/kg	Reporting Limit mg/kg
Mercury	7439-97-6	0.0198 B	0.00259	0

LABORATORY BLANK INFORMATION

Digestion Batch # GDIG990108100000

Analysis Batch # AAZ4 90111091701

Lab Sample ID CCB

File # Z4011109-34

Method Mercury by SW7470A

Test Code HGCSWA00

Date Prepared 01/08/99

Date Analyzed 01/11/99 10:40:00

Instrument Z4

Column

Analyst LAK

Reviewer LKH

Reporting Subset

Spikes Subset

Specs Subset

Matrix W

Analyte	Aliquot Mass/Volume 50 (mL) Extract/Digestate Volume 50 (mL) Dilution Factor 1 Measured Conc. mg/L	Detection Limit mg/L	Reporting Limit mg/L
Mercury	0.0000700	0.000030	-1000

LABORATORY BLANK INFORMATION

Digestion Batch # GDIG990108100000

Analysis Batch # AAZ4 90111091702

Lab Sample ID CCB

File # Z4011109-48

Method Mercury by SW7470A

Test Code HGCSWA00

Date Prepared 01/08/99

Date Analyzed 01/11/99 11:15:00

Instrument Z4

Column

Analyst LAK

Reviewer LKH

Reporting Subset

Spikes Subset

Specs Subset

Matrix W

Analyte	Aliquot Mass/Volume 50 (mL) Extract/Digestate Volume 50 (mL) Dilution Factor 1 Measured Conc. mg/L	Detection Limit mg/L	Reporting Limit mg/L
Mercury	0.0000600	0.000030	-1000

LABORATORY BLANK INFORMATION

Digestion Batch # GDIG990108100000
Analysis Batch # AAZ4 90111091700

Lab Sample ID ICB
File # Z4011109-9
Method Mercury by SW7470A
Test Code HGCSWA00

Date Prepared 01/08/99
Date Analyzed 01/11/99 09:38:00

Instrument Z4
Column
Analyst LAK
Reviewer LKH

Reporting Subset
Spikes Subset
Specs Subset

Matrix W

Analyte	Aliquot Mass/Volume 50 (mL) Extract/Digestate Volume 50 (mL) Dilution Factor 1 Measured Conc. mg/L	Detection Limit mg/L	Reporting Limit mg/L
Mercury	0.0000600	0.000030	-1000

LABORATORY BLANK INFORMATION

Digestion Batch # GDIG990108102000

Analysis Batch # AAZ4 90111091702

Lab Sample ID BLK9950

File # Z4011109-35

Method Mercury by SW7471A

Test Code HGCSSA00

Date Prepared 01/08/99

Date Analyzed 01/11/99 10:43:00

Instrument Z4

Column

Analyst LAK

Reviewer LKH

Reporting Subset

Spikes Subset

Specs Subset

Matrix S

Analyte	Aliquot Mass/Volume 0.50 (g) Extract/Digestate Volume 50 (mL) Dilution Factor 1 — Measured Conc. mg/kg	Detection Limit mg/kg	Reporting Limit mg/kg
Mercury	0.00700	0.00300	0

01/11/99 16:44:17

LABORATORY CONTROL SAMPLE

Digestion Batch # GDIG990108102000

Analysis Batch # AAZ4 90111091702

Work Order # 99-1047

Method Mercury by SW7470A

Test Code HGCSWA00

Date Prepared 01/08/99

Date Analyzed 01/11/99 10:50:00

Instrument Z4

Column

Analyst LAK

Reviewer LKH

Reporting Subset

Spikes Subset

Specs Subset

Matrix W

Report As

% Moisture

Aliquot Mass or Vol 50 (mL)

Extract Mass or Vol 50 (mL)

Control Std. #	Vol. Added	Surrogate Sol'n #	Vol. Added

Analyte	LCS Lab Sample ID LCS9966 File ID Z4011109-37			LCS Duplicate Lab Sample ID LCSD9966 File ID Z4011109-38			Recovery Spec. Limits		RPD	
	Spiked Conc. mg/L	Measured Conc. mg/L	Rec. %	Spiked Conc. mg/L	Measured Conc. mg/L	Rec. %	Low %	High %	Result %	Spec. Limit %
Mercury	0.0100	0.0108	108	0.0100	0.0108	108	82	123	0	13

01/11/99 16:44:17

MATRIX SPIKE(S)

Digestion Batch # GDIG990108102000

Analysis Batch # AAZ4 90111091702

Work Order # 9901047

Project Sample ID

Method Mercury by SW7471A

Test Code HGCSSA00

Date Collected 01/08/99

Date Received 01/05/99

Date Prepared 01/08/99

Date Analyzed 01/11/99 11:08:00

Instrument Z4

Column

Analyst LAK

Reviewer LKH

Reporting Subset

Spikes Subset

Specs Subset

Matrix S

Report As received

% Moisture

Spike Sol'n #	Vol. Added
Surrogate Sol'n	**Vol. Added**

Sample Lab Sample ID 9901049-01A, File # Z4011109-41, Aliquot Mass/Vol 0.52 (g), Extract Mass/Vol 50 (mL), Dil Fact. 1

Spiked Sample Lab Sample ID 9901049-03A MS, File # Z4011109-44, Aliquot Mass/Vol 0.52 (g), Extract Mass/Vol 50 (mL), Dil Fact. 1

Spiked Sample Dup Lab Sample ID 9901049-04A MSD, File # Z4011109-45, Aliquot Mass/Vol 0.58 (g), Extract Mass/Vol 50 (mL), Dil Fact. 1

Analyte	Spike Sol'n Conc. mg/L	Sample Measured Conc. mg/kg	Spiked Sample Spiked Conc. mg/kg	Spiked Sample Measured Conc. mg/kg	Spiked Sample Rec. %	Spiked Sample Dup Spiked Conc. mg/kg	Spiked Sample Dup Measured Conc. mg/kg	Spiked Sample Dup Rec. %	Recovery Specification Limits Low %	Recovery Specification Limits High %	RPD Result %	RPD Specification Limit %
Mercury	0.002	0.635 B	0.192	0.827	100	0.172	0.808	100	70	130	0	25

CONTINUING (OR DAILY) CALIBRATION VERIFICATION

Analysis Batch # AA24 90111091701
Initial Calibration # Z4990111091700

Lab Sample ID CCV
File # Z4011109-33
Method Mercury by SW7470A
Test Code HGCSWA00

Date Analyzed 01/11/99 10:38:00

Reporting Subset ___
Spikes Subset ___
Specs Subset ___

Instrument Z4
Analyst LAK
Reviewer LKH

Analyte	Measured Concentration mg/L	Reference Concentration mg/L	Recovery %	Recovery Specification Limits	
				Low %	High %
Mercury	0.0101	0.0100	101	90	110

CONTINUING (OR DAILY) CALIBRATION VERIFICATION

Work Order # 9901047

Analysis Batch # AAZ4 90111091702

Initial Calibration # Z4990111091700

Lab Sample ID CCV

File # Z4011109-47

Method Mercury by SW7470A

Test Code HGCSWA00

Date Analyzed 01/11/99 11:13:00

Reporting Subset ___

Spikes Subset ___

Specs Subset ___

Instrument Z4

Analyst LAK

Reviewer LKH

Analyte	Measured Concentration mg/L	Reference Concentration mg/L	Recovery %	Recovery Specification Limits	
				Low %	High %
Mercury	0.0102	0.0100	102	90	110

CONTINUING (OR DAILY) CALIBRATION VERIFICATION

Analysis Batch # AAZ4 90111091700
Initial Calibration # Z4990111091700

Lab Sample ID ICV
File # Z4011109-8
Method Mercury by SW7470A
Test Code HGCSWA00

Date Analyzed 01/11/99 09:35:00

Reporting Subset ___
Spikes Subset ___
Specs Subset ___

Instrument Z4
Analyst LAK
Reviewer LKH

Analyte	Measured Concentration mg/L	Reference Concentration mg/L	Recovery %	Recovery Specification Limits	
				Low %	High %
Mercury	0.00964	0.0100	96	90	110

ANALYTICAL SPIKE(S)

Digestion Batch # GDIG990108102000
Analysis Batch # AAZ4 90111091702

Work Order # 9901047

Project Sample ID
Method Mercury by SW7471A
Test Code HGCSSA00

Date Collected
Date Received 01/05/99
Date Prepared 01/08/99
Date Analyzed 01/11/99 11:03:00

Instrument Z4
Column
Analyst LAK
Reviewer LKH

Reporting Subset
Spikes Subset
Specs Subset

Matrix S
Report As received
% Moisture

Spike Sol'n #	Vol. Added
Surrogate Sol'n	**Vol. Added**

Sample
Lab Sample ID 9901049-01A
File # Z4011109-41
Aliquot Mass/Vol 0.52 (g)
Extract Mass/Vol 50 (mL)
Dil Fact. 1

Spiked Sample
Lab Sample ID 9901049-01A
File # Z4011109-43
Aliquot Mass/Vol 0.52 (g)
Extract Mass/Vol 50 (mL)
Dil Fact. 1.25

Spiked Sample Dup
Lab Sample ID
File #
Aliquot Mass/Vol
Extract Mass/Vol
Dil Fact.

Recovery Specification Limits

RPD

Analyte	Spike Sol'n Conc. mg/L	Measured Conc. mg/kg	Spiked Conc. mg/kg	Measured Conc. mg/kg	Rec. %	Spiked Conc.	Measured Conc.	Rec. %	Low %	High %	Result %	Specification Limit %
Mercury	0.002	0.635 B	0.240	0.898	109				85	115		

01/11/99 16:44:17

SERIAL DILUTION CHECK

Digestion Batch # GDIG990108102000

Analysis Batch # AAZ4 90111091702

Work Order # 9901047

Page 21

Project Sample ID

Method Mercury by SW7471A

Test Code HGCSSA00

Date Prepared 01/08/99

Date Analyzed 01/11/99 11:00:00

Instrument Z4

Analyst LAK

Reviewer LKH

Reporting Subset

Spikes Subset

Specs Subset

Matrix S

Report As recieved

	Sample Result Lab Sample ID 9901049-01A Dilution Factor 1		Diluted Sample Result Lab Sample ID 9901049-01A Dilution Factor 5		% Difference	
Analyte	Measured Concentration mg/kg	Detection Limit mg/kg	Measured Concentration mg/kg	Detection Limit mg/kg	Result	Specification Limit %
Mercury	0.635 B	0.00288	0.702	0.0144	11 Q	10

ANALYTICAL PROTOCOL SUMMARY
COMMENTS/NARRATIVE

Method Mercury by SW-846 Specification# HGCS

Lab Sample ID / File ID	Project Sample ID/Description	Analyte	Flag	Comment/Narrative	Corrective Action

RADIAN ANALYTICAL SERVICES
FPAS REPORT
TABLE OF CONTENTS

Work Order # 9812745

Client DOE/EPRI
Facility SEYMOUR GENERATING STATION
Client Code SEYMOUR HG

Certified By [signature]
Date 1/6/99

Report Form	Analytical Batch ID	Pages From	Pages To
Work Order Summary		1	1
Work Order Comments		2	2
State Certifications		3	3
Flag Definitions		4	4
Protocol Summary for Mercury by SW-846		5	5
Results Summary		6	6
Initial Calibration		7	7
Extraction Batch Summary		8	8
Analysis Batch Summary	AAZ4__90105085801	9	9
Results		10	13
Laboratory Blank Information		14	16
Laboratory Control Samples		17	17
Matrix Spikes		18	19
Calibration Verification		20	21
Analytical Spikes		22	22
Serial Dilutions		23	23
Comments/Narrative		24	24

HNO_3 / H_2O_2

12/30/98 15:49:13

RADIAN ANALYTICAL SERVICES
FPAS REPORT
TABLE OF CONTENTS

Work Order # 9812742

Client DOE/EPRI
Facility SEYMOUR GENERATING STATION
Client Code SEYMOUR HG

Certified By [signature]
Date 12/31/98

Report Form	Analytical Batch ID	Pages From	Pages To
Work Order Summary		1	1
Work Order Comments		2	2
State Certifications		3	3
Flag Definitions		4	4
Protocol Summary for Mercury by SW-846		5	5
Results Summary		6	7
Initial Calibration		8	8
Extraction Batch Summary		9	9
Analysis Batch Summary	AAZ4__81230090303	10	11
Results		12	18
Laboratory Blank Information		19	23
Laboratory Control Samples		24	24
Matrix Spikes		25	25
Calibration Verification		26	29
Analytical Spikes		30	30
Serial Dilutions		31	31
Comments/Narrative		32	32

12/30/98 15:49:13

WORK ORDER SUMMARY

Report RADIAN INTERNATIONAL, LLC
To PO BOX 201088
AUSTIN, TX 78720-1088
Attention CARL RICHARDSON

Client Code SEYMOUR HG
Client DOE/EPRI
Facility SEYMOUR GENERATING STATION
Work ID MERCURY/CHLORIDE

Work Order # 9812742
Page 1

RCN 66035702.0202

Prepared Radian International, LLC
By 14046 Summit Dr., Bldg. B
P. O. Box 201088
Austin, TX 78720-1088

CSC DPMAXWELL

Case # NA
SDG # NA
RAS # 81201BDPM

New York ELAP ID #: 10915

Project Sample ID/ Description	Lab Sample ID	Test Code(s)	Method Desciption
IN-1 HNO3/H2O2	01A	HGCBTA00	Mercury by CVAAS
IN-2 HNO3/H2O2	02A	HGCBTA00	Mercury by CVAAS
IN-3 HNO3/H2O2	03A	HGCBTA00	Mercury by CVAAS
OUT-1 HNO3/H2O2	04A	HGCBTA00	Mercury by CVAAS
OUT-2 HNO3/H2O2	05A	HGCBTA00	Mercury by CVAAS
OUT-3 HNO3/H2O2	06A	HGCBTA00	Mercury by CVAAS
FIELD BLANK HNO3/H2O2	07A	HGCBTA00	Mercury by CVAAS
IN-3 HNO3/H2O2	08A MS	HGCBTA00	Mercury by CVAAS
	09A MSD	HGCBTA00	Mercury by CVAAS

WORK ORDER COMMENTS

Post digestion spikes not performed on all GFAAS analyses per Item 271 of the New York ELAP manual. Post digestion spikes were performed, as necessary, when recoveries for serial dilutions or matrix spikes for an analytical batch did not fall within recovery tolerances.

STATE CERTIFICATIONS

State	Agency	Certification ID
Arkansas	Department of Pollution Control and Ecology	
California	California Environmental Laboratory Accreditation Program	2257
Kansas	Kansas Department of Health and Environment	E-10165
Louisiana	Louisiana Department of Health and Hospitals	LA 97-29
North Carolina	Department of Environment, Health and Natural Resources	302
New Jersey	New Jersey Department of Environmental Protection	82005
New York	New York State Department of Health	10915
Oklahoma	Oklahoma Water Resources Board	8720
South Carolina	Department of Health and Environmental Control	82003001
Utah	Utah Department of Health	RADC
Wisconsin	Wisconsin Department of Natural Resources	99885260

ANALYTICAL PROTOCOL SUMMARY

FLAG DEFINITIONS

Flag	Definition
< DL	Result less than stated Detection Limit and greater than or equal to zero.
NA	Analyte concentration not available for this analysis.
NC	RPD and/or % Recovery not calculated. See Narrative for explanation.
ND	Not detected. No instrument response for analyte or result less than zero.
NR	Not reported. Result greater than or equal to stated Detection Limit and less than specified Reporting Limit.
NS	Analyte not spiked.
A	Presence of hydrocarbon mix eluting in the Lube Oil range. The pattern does not match that of Lube Oil.
B	Analyte detected in method blank at concentration greater than the Reporting Limit (and greater than zero).
C	Confirming data obtained using second GC column or GCMS.
D	Presence of hydrocarbon mix eluting in the Diesel range. The pattern does not match that of Diesel.
E	Analyte concentration exceeded calibration range.
F	Interference or coelution suspected. See Narrative for explanation.
G	Presence of hydrocarbon mix eluting in the Jet Fuel range. The pattern does not match that of Jet Fuel.
H	Presence of analyte previously confirmed by historical data.
I	Analyte identification suspect. See Narrative for explanation.
J	Result is less than stated Detection Limit but greater than or equal to specified Reporting Limit.
K	Peak did not meet method identification criteria. Analyte not detected on other GC column.
M	Result modified from previous Report. See Narrative for explanation.
P	Analyte not confirmed. Results from primary and secondary GC columns differ by greater than a factor of 3.
Q	QC result does not meet tolerance in Protocol Specification.
R	Result reported elsewhere.
S	Analyte concentration obtained using Method of Standard Additions (MSA).
T	Second column confirmational analysis not performed.
X	See Narrative for explanation.
Y	See Narrative for explanation.
Z	See Narrative for explanation.

ANALYTICAL PROTOCOL SUMMARY

Client DOE/EPRI
Facility SEYMOUR GENERATING STATION
Client Code SEYMOUR HG
Method Mercury by SW-846

Project Sample ID/Description	Lab Sample ID	Test Code(s)	Extraction/Digestion Batch #	Analysis Batch #
FIELD BLANK HNO3/H2O2	9812742-07A	HGCBTA00	GDIG981229102000	AAZ4__81230090303
IN-1 HNO3/H2O2	9812742-01A	HGCBTA00	GDIG981229102000	AAZ4__81230090303
IN-2 HNO3/H2O2	9812742-02A	HGCBTA00	GDIG981229102000	AAZ4__81230090303
IN-3 HNO3/H2O2	9812742-03A	HGCBTA00	GDIG981229102000	AAZ4__81230090303
OUT-1 HNO3/H2O2	9812742-04A	HGCBTA00	GDIG981229102000	AAZ4__81230090303
OUT-2 HNO3/H2O2	9812742-05A	HGCBTA00	GDIG981229102000	AAZ4__81230090303
OUT-3 HNO3/H2O2	9812742-06A	HGCBTA00	GDIG981229102000	AAZ4__81230090303

RESULTS SUMMARY

Method Metals Train Hg by SW7470A
Test Code HGCBTA00

Project Sample ID:	FIELD BLANK H NO3/H2O2		IN-1 HNO3/H2O2		IN-2 HNO3/H2O2		IN-3 HNO3/H2O2	
Lab ID:	9812742-07A		9812742-01A		9812742-02A		9812742-03A	
File ID:	Z4123009-81		Z4123009-71		Z4123009-72		Z4123009-73	
Date Collected:	12/03/98		12/02/98		12/02/98		12/03/98	
Date Prepared:	12/29/98		12/29/98		12/29/98		12/29/98	
Date Analyzed:	12/30/98 12:24:00		12/30/98 11:59:00		12/30/98 12:02:00		12/30/98 12:04:00	
Dilution Factor:	5		5		5		5	
Matrix:	Train-Back		Train-Back		Train-Back		Train-Back	
Units:	ug		ug		ug		ug	
Report as:	received		received		received		received	
Column:								
Analyte	Conc.	DL	Conc.	DL	Conc.	DL	Conc.	DL
Mercury	0.188	0.0767	0.594	0.0408	0.324	0.0377	0.334	0.0514
-Blank	0		0.406		0.136		0.146	

RESULTS SUMMARY (Cont'd)

Method Metals Train Hg by SW7470A
Test Code HGCBTA00

Project Sample ID:	OUT-1 HNO3/H2O2		OUT-2 HNO3/H2O2		OUT-3 HNO3/H2O2			
Lab ID:	9812742-04A		9812742-05A		9812742 06A			
File ID:	Z4123009-78		Z4123009-79		Z4123009-80			
Date Collected:	12/02/98		12/02/98		12/03/98			
Date Prepared:	12/29/98		12/29/98		12/29/98			
Date Analyzed:	12/30/98 12:16:00		12/30/98 12:19:00		12/30/98 12:21:00			
Dilution Factor:	5		5		5			
Matrix:	Train-Back		Train-Back		Train-Back			
Units:	ug		ug		ug			
Report as:	received		received		received			
Column:								
Analyte	Conc.	DL	Conc.	DL	Conc.	DL	Conc.	DL
Mercury	0.108	0.0386	0.141	0.0474	0.153	0.0436		

0 0 0

12/30/98 15:49:13

INITIAL CALIBRATION

Work Order # 9812742

Page 8

Sol'n #

Method Mercury by SW-846

Test Code HGCSWA00

Initial Calibration # Z4981230090300

Calibration Date 12/30/98 09:03:00

Instrument Z4

Analyst LAK

Reviewer LKH

Analytes	Response Area Counts Reference Conc. mg/L	Response Area Counts Reference Conc. mg/L	Response Area Counts Reference Conc. mg/L	Response Area Counts Reference Conc. mg/L	Response Area Counts Reference Conc. mg/L	Response Area Counts Reference Conc. mg/L	Response Area Counts Reference Conc. mg/L	Correlation Coefficient
Mercury	0.000 0	0.0030096 0.0005	0.0068552 0.001	0.0127407 0.002	0.0264847 0.004	0.0677166 0.010	0.1341626 0.020	1.000

Specification Limits for correlation coefficient >0.995

DIGESTION BATCH SUMMARY

Digestion Batch # GDIG981229102000

Work Order # 9812742

Method Digestion by SW7470A

Test Code DHGSWA00

Extraction Start Date/Time 12/29/98 10:20:00

Extraction Stop Date/Time

Analyst RWG

Reviewer LAK

Sample	Project Sample ID	Lab Sample ID	Sample Size mL	Cleanup Method
1	IN-1 HNO3/H2O2	9812742-01A	10	
2	IN-2 HNO3/H2O2	9812742-02A	10	
3	IN-3 HNO3/H2O2	9812742-03A	10	
4	OUT-1 HNO3/H2O2	9812742-04A	10	
5	OUT-2 HNO3/H2O2	9812742-05A	10	
6	OUT-3 HNO3/H2O2	9812742-06A	10	
7	FIELD BLANK HNO3/H2O2	9812742-07A	10	
8		9812743-01A	10	
9		9812743-02A	10	
10		9812743-03A	10	
11		9812743-04A	10	
12		9812743-05A	10	
13		9812743-06A	10	
14		9812743-07A	10	
15				
16				
17				
18				
19				
20				

Quality Control	Project Sample ID	Lab Sample ID	Sample Size mL	Cleanup Method
Blank		BLK984626	10	
Detectability Check Sample		DCS987076	50	
Laboratory Control Sample		LCS987077	50	
Laboratory Control Sample Duplicate		LCSD987077	50	
Matrix Spike	IN-3 HNO3/H2O2	9812742-08A	10	
Matrix Spike Duplicate	IN-3 HNO3/H2O2	9812742-09A	10	

12/30/98 15:49:13

ANALYSIS BATCH SUMMARY

Analysis Batch # AAZ4 81230090303

Work Order # 9812742

Method Mercury by SW-846
Test Code HGCSWA00
Initial Calibration # Z4981230090300
Calibration Date 12/30/98

Analysis Start Date/Time 12/30/98 09:03:00
Analysis Stop Date/Time 12/30/98 12:54:00

Instrument Z4
Analyst LAK
Reviewer LKH

Sequence/Analysis Time		Project Sample ID	Lab Sample ID	Sample Type	Analysis File #
1	12/30/98 09:02:00		S_0	Initial Calibration Blank	Z4123009-1
2	12/30/98 09:04:00		S_05	Initial Calibration Standard 1	Z4123009-2
3	12/30/98 09:07:00		S_1	Initial Calibration Standard 2	Z4123009-3
4	12/30/98 09:09:00		S_2	Initial Calibration Standard 3	Z4123009-4
5	12/30/98 09:12:00		S_4	Initial Calibration Standard 4	Z4123009-5
6	12/30/98 09:14:00		S_10	Initial Calibration Standard 5	Z4123009-6
7	12/30/98 09:17:00		S_20	Initial Calibration Standard 6	Z4123009-7
8	12/30/98 09:20:00		ICV	Initial Calibration Verification	Z4123009-8
9	12/30/98 09:23:00		ICB	Blank, Initial Calibration	Z4123009-9
65	12/30/98 11:44:00		CCV	Continuing Calibration Verification	Z4123009-65
66	12/30/98 11:46:00		CCB	Blank, Continuing Calibration	Z4123009-66
67	12/30/98 11:49:00		BLK984626	Blank, Method	Z4123009-67
68	12/30/98 11:51:00		DCS987076	Detectability Check Sample	Z4123009-68
69	12/30/98 11:54:00		LCS987077	Lab Control Sample	Z4123009-69
70	12/30/98 11:57:00		LCSD987077	Lab Control Sample Duplicate	Z4123009-70
71	12/30/98 11:59:00	IN 1 HNO3/H2O2	9812742-01A	Sample	Z4123009-71
72	12/30/98 12:02:00	IN 2 HNO3/H2O2	9812742-02A	Sample	Z4123009-72
73	12/30/98 12:04:00	IN 3 HNO3/H2O2	9812742-03A	Sample	Z4123009-73
74	12/30/98 12:07:00	IN 3 HNO3/H2O2	9812742-03A	Serial Dilutions	Z4123009-74
75	12/30/98 12:09:00	IN 3 HNO3/H2O2	9812742-03A	Analytical Spike	Z4123009-75
76	12/30/98 12:12:00	IN 3 HNO3/H2O2	9812742-08A	Matrix Spike	Z4123009-76
77	12/30/98 12:14:00	IN-3 HNO3/H2O2	9812742-09A	Matrix Spike Duplicate	Z4123009-77
78	12/30/98 12:16:00	OUT-1 HNO3/H2O2	9812742-04A	Sample	Z4123009-78
79	12/30/98 12:19:00	OUT-2 HNO3/H2O2	9812742-05A	Sample	Z4123009-79
80	12/30/98 12:21:00	OUT-3 HNO3/H2O2	9812742-06A	Sample	Z4123009-80
81	12/30/98 12:24:00	FIELD BLANK HNO3/H2O2	9812742-07A	Sample	Z4123009-81
82	12/30/98 12:26:00		CCV	Continuing Calibration Verification	Z4123009-82
83	12/30/98 12:29:00		CCB	Blank, Continuing Calibration	Z4123009-83
84	12/30/98 12:31:00		9812743-01A	Sample	Z4123009-84
85	12/30/98 12:34:00		9812743-02A	Sample	Z4123009-85

ANALYSIS BATCH SUMMARY (cont'd)

Analysis Batch # AAZ4 81230090303

Method Mercury by SW-846
Test Code HGCSWA00
Initial Calibration # Z4981230090400
Calibration Date 12/30/98

Analysis Start Date/Time 12/30/98 09:03:00
Analysis Stop Date/Time 12/30/98 12:54:00

Instrument Z4
Analyst LAK
Reviewer LKH

Sequence/Analysis Time	Project Sample ID	Lab Sample ID	Sample Type	Analysis File #
86 12/30/98 12:36:00		9812743-03A	Sample	Z4123009-86
87 12/30/98 12:39:00		9812743-04A	Sample	Z4123009-87
88 12/30/98 12:41:00		9812743-05A	Sample	Z4123009-88
89 12/30/98 12:44:00		9812743-06A	Sample	Z4123009-89
90 12/30/98 12:47:00		9812743-07A	Sample	Z4123009-90
91 12/30/98 12:49:00		CCV	Continuing Calibration Verification	Z4123009-91
92 12/30/98 12:51:00		CCB	Blank, Continuing Calibration	Z4123009-92

12/30/98 15:49:13

RESULTS

Digestion Batch # GDIG981229102000

Analysis Batch # AAZ4 81230090303

Work Order # 9812742

Page 12

Project Sample ID IN-1 HNO3/H2O2

Lab Sample ID 9812742-01A

File # Z4123009-71

Method Metals Train Hg by SW7470A

Test Code HGCBTA00

Date Collected 12/02/98

Date Received 12/17/98

Date Prepared 12/29/98

Date Analyzed 12/30/98 11:59:00

Instrument Z4

Column

Analyst LAK

Reviewer LKH

Reporting Subset

Spikes Subset

Specs Subset

Matrix T

Report As received

% Moisture

Aliquot Mass/Volume 10 (g)

Extract/Digestate Volume 143.02 (mL)

Dilution Factor 5

Analyte	CAS #	Measured Concentration ug	Detection Limit ug	Reporting Limit ug
Mercury	7439-97-6	0.594	0.0408	0

RESULTS

Digestion Batch # GDIG981229102000
Analysis Batch # AAZ4 8123009030 3

Project Sample ID IN-2 HNO3/H2O2
Lab Sample ID 9812742-02A
File # Z4123009-72
Method Metals Train Hg by SW7470A
Test Code HGCBTA00

Date Collected 12/02/98
Date Received 12/17/98
Date Prepared 12/29/98
Date Analyzed 12/30/98 12:02:00

Instrument Z4
Column
Analyst LAK
Reviewer LKH

Reporting Subset
Spikes Subset
Specs Subset

Matrix T
Report As received
% Moisture

Aliquot Mass/Volume 10 (g)
Extract/Digestate Volume 132.28 (mL)
Dilution Factor 5

Analyte	CAS #	Measured Concentration ug	Detection Limit ug	Reporting Limit ug
Mercury	7439-97 6	0.324	0.0377	0

RESULTS

Digestion Batch # GDIG981229102000
Analysis Batch # AAZ4 81230090303

Work Order # 9812742

Project Sample ID IN-3 HNO3/H2O2
Lab Sample ID 9812742-03A
File # Z4123009-73
Method Metals Train Hg by SW7470A
Test Code HGCBTA00

Date Collected 12/03/98
Date Received 12/17/98
Date Prepared 12/29/98
Date Analyzed 12/30/98 12:04:00

Instrument Z4
Column
Analyst LAK
Reviewer LKH

Reporting Subset
Spikes Subset
Specs Subset

Matrix T
Report As received
% Moisture

Aliquot Mass/Volume 10 (g)
Extract/Digestate Volume 180.46 (mL)
Dilution Factor 5

Analyte	CAS #	Measured Concentration ug	Detection Limit ug	Reporting Limit ug
Mercury	7439-97-6	0.334	0.0514	0

RESULTS

Digestion Batch # GDIG981229102000
Analysis Batch # AAZ4 81230090303

Work Order # 9812742

Project Sample ID OUT-1 HNO3/H2O2
Lab Sample ID 9812742-04A
File # Z4123009-78
Method Metals Train Hg by SW7470A
Test Code HGCBTA00

Date Collected 12/02/98
Date Received 12/17/98
Date Prepared 12/29/98
Date Analyzed 12/30/98 12:16:00

Instrument Z4
Column
Analyst LAK
Reviewer LKH

Reporting Subset
Spikes Subset
Specs Subset

Matrix T
Report As received
% Moisture

Aliquot Mass/Volume 10 (g)
Extract/Digestate Volume 135.42 (mL)
Dilution Factor 5

Analyte	CAS #	Measured Concentration ug	Detection Limit ug	Reporting Limit ug
Mercury	7439-97-6	0.108	0.0386	0

12/30/98 15:49:13

RESULTS

Digestion Batch # GDIG981229102000

Analysis Batch # AAZ4 8123009030 4

Work Order # 9812742

Page 16

Project Sample ID OUT-2 HNO3/H2O2

Lab Sample ID 9812742-05A

File # Z4123009-79

Method Metals Train Hg by SW7470A

Test Code HGCBTA00

Date Collected 12/02/98

Date Received 12/17/98

Date Prepared 12/29/98

Date Analyzed 12/30/98 12:19:00

Instrument Z4

Column

Analyst LAK

Reviewer LKH

Reporting Subset

Spikes Subset

Specs Subset

Matrix T

Report As received

% Moisture

Aliquot Mass/Volume 10 (g)

Extract/Digestate Volume 166.23 (mL)

Dilution Factor 5

Analyte	CAS #	Measured Concentration ug	Detection Limit ug	Reporting Limit ug
Mercury	7439-97-6	0.141	0.0474	0

RESULTS

Digestion Batch # GDIG981229102000

Analysis Batch # AAZ4 81230090303

Work Order # 9812742

Project Sample ID OUT-3 HNO3/H2O2
Lab Sample ID 9812742-06A
File # Z4123009-80
Method Metals Train Hg by SW7470A
Test Code HGCBTA00

Date Collected 12/03/98
Date Received 12/17/98
Date Prepared 12/29/98
Date Analyzed 12/30/98 12:21:00

Instrument Z4
Column
Analyst LAK
Reviewer LKH

Reporting Subset
Spikes Subset
Specs Subset

Matrix T
Report As received
% Moisture

Aliquot Mass/Volume 10 (g)
Extract/Digestate Volume 153.06 (mL)
Dilution Factor 5

Analyte	CAS #	Measured Concentration ug	Detection Limit ug	Reporting Limit ug
Mercury	7439-97-6	0.153	0.0436	0

12/30/98 15:49:13

RESULTS

Digestion Batch # GDIG981229102000
Analysis Batch # AAZ4 81230090303

Work Order # 9812742
Page 18

Project Sample ID FIELD BLANK HNO3/H2O2
Lab Sample ID 9812742-07A
File # Z4123009-81
Method Metals Train Hg by SW7470A
Test Code HGCBTA00

Date Collected 12/03/98
Date Received 12/17/98
Date Prepared 12/29/98
Date Analyzed 12/30/98 12:24:00

Instrument Z4
Column
Analyst LAK
Reviewer LKH

Reporting Subset
Spikes Subset
Specs Subset

Matrix T
Report As received
% Moisture

Aliquot Mass/Volume 10 (g)
Extract/Digestate Volume 269.01 (mL)
Dilution Factor 5

Analyte	CAS #	Measured Concentration ug	Detection Limit ug	Reporting Limit ug
Mercury	7439-97-6	0.188	0.0767	0

= 0.70 µg/L

12/30/98 15:49:13

LABORATORY BLANK INFORMATION

Work Order # 9812742

Page 19

Digestion Batch # GDIG981229100000

Analysis Batch # AAZ4 81230090302

Lab Sample ID CCB

File # Z4123009-66

Method Mercury by SW7470A

Test Code HGCSWA00

Date Prepared 12/29/98

Date Analyzed 12/30/98 11:46:00

Instrument Z4

Column

Analyst LAK

Reviewer LKH

Reporting Subset

Spikes Subset

Specs Subset

Matrix W

Analyte	Aliquot Mass/Volume 50 (mL) Extract/Digestate Volume 50 (mL) Dilution Factor 1 Measured Conc. mg/L	Detection Limit mg/L	Reporting Limit mg/L
Mercury	-0.000050 J	0.000057	.1000

LABORATORY BLANK INFORMATION

Digestion Batch # GDIG981229100000
Analysis Batch # AAZ4 81230090303

Lab Sample ID CCB
File # Z4123009-83
Method Mercury by SW7470A
Test Code HGCSWA00

Date Prepared 12/29/98
Date Analyzed 12/30/98 12:29:00

Instrument Z4
Column
Analyst LAK
Reviewer LKH

Reporting Subset
Spikes Subset
Specs Subset

Matrix W

Analyte	Aliquot Mass/Volume 50 (mL) Extract/Digestate Volume 50 (mL) Dilution Factor 1 Measured Conc. mg/L	Detection Limit mg/L	Reporting Limit mg/L
Mercury	-0.000020 J	0.000057	.1000

LABORATORY BLANK INFORMATION

Digestion Batch # GDIG981229100000
Analysis Batch # AAZ4 81230090303

Lab Sample ID CCB
File # Z4123009-92
Method Mercury by SW7470A
Test Code HGCSWA00

Date Prepared 12/29/98
Date Analyzed 12/30/98 12:51:00

Instrument Z4
Column
Analyst LAK
Reviewer LKH

Reporting Subset
Spikes Subset
Specs Subset

Matrix W

Analyte	Aliquot Mass/Volume 50 (mL) Extract/Digestate Volume 50 (mL) Dilution Factor 1 Measured Conc. mg/L	Detection Limit mg/L	Reporting Limit mg/L
Mercury	0.0000300 J	0.000057	1000

12/30/98 15:49:13

LABORATORY BLANK INFORMATION

Work Order # 9812742

Page 22

Digestion Batch # GDIG981229100000

Analysis Batch # AAZ4 81230090300

Lab Sample ID ICB

File # Z4123009-9

Method Mercury by SW7470A

Test Code HGCSWA00

Date Prepared 12/29/98

Date Analyzed 12/30/98 09:23:00

Instrument Z4

Column

Analyst LAK

Reviewer LKH

Reporting Subset

Spikes Subset

Specs Subset

Matrix W

Analyte	Aliquot Mass/Volume 50 (mL) Extract/Digestate Volume 50 (mL) Dilution Factor 1 Measured Conc. mg/L	Detection Limit mg/L	Reporting Limit mg/L
Mercury	-0.000020 J	0.000057	.1000

RADIAN ANALYTICAL SERVICES
FPAS REPORT
TABLE OF CONTENTS

Work Order # 9812743

Client DOE/EPRI
Facility SEYMOUR GENERATING STATION
Client Code SEYMOUR HG

Certified By Linda Parton
Date 12/31/98

Report Form	Analytical Batch ID	Pages From	Pages To
Work Order Summary		1	1
Work Order Comments		2	2
State Certifications		3	3
Flag Definitions		4	4
Protocol Summary for Mercury by SW-846		5	5
Results Summary		6	7
Initial Calibration		8	8
Extraction Batch Summary		9	9
Analysis Batch Summary	AAZ4__81230090303	10	11
Results		12	18
Laboratory Blank Information		19	23
Laboratory Control Samples		24	24
Matrix Spikes		25	25
Calibration Verification		26	29
Analytical Spikes		30	30
Serial Dilutions		31	31
Comments/Narrative		32	32

HCl Rinse

WORK ORDER COMMENTS

Post digestion spikes not performed on all GFAAS analyses per Item 271 of the New York ELAP manual. Post digestion spikes were performed, as necessary, when recoveries for serial dilutions or matrix spikes for an analytical batch did not fall within recovery tolerances.

STATE CERTIFICATIONS

State	Agency	Certification ID
Arkansas	Department of Pollution Control and Ecology	
California	California Environmental Laboratory Accreditation Program	2257
Kansas	Kansas Department of Health and Environment	E-10165
Louisiana	Louisiana Department of Health and Hospitals	LA 97-29
North Carolina	Department of Environment, Health and Natural Resources	302
New Jersey	New Jersey Department of Environmental Protection	82005
New York	New York State Department of Health	10915
Oklahoma	Oklahoma Water Resources Board	8720
South Carolina	Department of Health and Environmental Control	82003001
Utah	Utah Department of Health	RADC
Wisconsin	Wisconsin Department of Natural Resources	99885260

FLAG DEFINITIONS

Flag	Definition
< DL	Result less than stated Detection Limit and greater than or equal to zero.
NA	Analyte concentration not available for this analysis.
NC	RPD and/or % Recovery not calculated. See Narrative for explanation.
ND	Not detected. No instrument response for analyte or result less than zero.
NR	Not reported. Result greater than or equal to stated Detection Limit and less than specified Reporting Limit.
NS	Analyte not spiked.
A	Presence of hydrocarbon mix eluting in the Lube Oil range. The pattern does not match that of Lube Oil.
B	Analyte detected in method blank at concentration greater than the Reporting Limit (and greater than zero).
C	Confirming data obtained using second GC column or GCMS.
D	Presence of hydrocarbon mix eluting in the Diesel range. The pattern does not match that of Diesel.
E	Analyte concentration exceeded calibration range.
F	Interference or coelution suspected. See Narrative for explanation.
G	Presence of hydrocarbon mix eluting in the Jet Fuel range. The pattern does not match that of Jet Fuel.
H	Presence of analyte previously confirmed by historical data.
I	Analyte identification suspect. See Narrative for explanation.
J	Result is less than stated Detection Limit but greater than or equal to specified Reporting Limit.
K	Peak did not meet method identification criteria. Analyte not detected on other GC column.
M	Result modified from previous Report. See Narrative for explanation.
P	Analyte not confirmed. Results from primary and secondary GC columns differ by greater than a factor of 3.
Q	QC result does not meet tolerance in Protocol Specification.
R	Result reported elsewhere.
S	Analyte concentration obtained using Method of Standard Additions (MSA).
T	Second column confirmational analysis not performed.
X	See Narrative for explanation.
Y	See Narrative for explanation.
Z	See Narrative for explanation.

ANALYTICAL PROTOCOL SUMMARY

Client DOE/EPRI
Facility SEYMOUR GENERATING STATION
Client Code SEYMOUR HG
Method Mercury by SW-846

Project Sample ID/Description	Lab Sample ID	Test Code(s)	Extraction/Digestion Batch #	Analysis Batch #
FIELD BLANK HCL	9812743-07A	HGCBTA00	GDIG981229102000	AAZ4__81230090303
IN-1 HCL	9812743-01A	HGCBTA00	GDIG981229102000	AAZ4__81230090303
IN-2 HCL	9812743-02A	HGCBTA00	GDIG981229102000	AAZ4__81230090303
IN-3 HCL	9812743-03A	HGCBTA00	GDIG981229102000	AAZ4__81230090303
OUT-1 HCL	9812743-04A	HGCBTA00	GDIG981229102000	AAZ4__81230090303
OUT-2 HCL	9812743-05A	HGCBTA00	GDIG981229102000	AAZ4__81230090303
OUT-3 HCL	9812743-06A	HGCBTA00	GDIG981229102000	AAZ4__81230090303

RESULTS SUMMARY

Method Metals Train Hg by SW7470A
Test Code HGCBTA00

Project Sample ID:	FIELD BLANK HCL		IN-1 HCL		IN-2 HCL		IN-3 HCL	
Lab ID:	9812743-07A		9812743-01A		9812743-02A		9812743-03A	
File ID:	Z4123009-90		Z4123009-84		Z4123009-85		Z4123009-86	
Date Collected:	12/03/98		12/02/98		12/02/98		12/03/98	
Date Prepared:	12/29/98		12/29/98		12/29/98		12/29/98	
Date Analyzed:	12/30/98 12:47:00		12/30/98 12:31:00		12/30/98 12:34:00		12/30/98 12:36:00	
Dilution Factor:	5		5		5		5	
Matrix:	Train-Back		Train-Back		Train-Back		Train-Back	
Units:	ug		ug		ug		ug	
Report as:	received		received		received		received	
Column:								
Analyte	Conc.	DL	Conc.	DL	Conc.	DL	Conc.	DL
Mercury	0.0500 J	0.0713	0.145	0.0295	0.242	0.0510	0.0210 J	0.0600
Blank Correct	0		0.095		0.192		0.160	

RESULTS SUMMARY (Cont'd)

Method Metals Train Hg by SW7470A
Test Code HGCBTA00

Project Sample ID:	OUT-1 HCL		OUT-2 HCL		OUT-3 HCL			
Lab ID:	9812743-04A		9812743-05A		9812743-06A			
File ID:	Z4123009-87		Z4123009-88		Z4123009-89			
Date Collected:	12/02/98		12/02/98		12/03/98			
Date Prepared:	12/29/98		12/29/98		12/29/98			
Date Analyzed:	12/30/98 12:39:00		12/30/98 12:41:00		12/30/98 12:44:00			
Dilution Factor:	5		5		5			
Matrix:	Train-Back		Train-Back		Train-Back			
Units:	ug		ug		ug			
Report as:	received		received		received			
Column:								
Analyte	Conc.	DL	Conc.	DL	Conc.	DL	Conc.	DL
Mercury	0.157	0.0408	0.152	0.0578	0.141	0.0573		
	0.107		0.102		0.091			

12/30/98 15:48:06

INITIAL CALIBRATION

Work Order # 9812743

Initial Calibration # Z4981230090300

Calibration Date 12/30/98 09:03:00

Sol'n #

Method Mercury by SW-846

Test Code HGCSWA00

Instrument Z4

Analyst LAK

Reviewer LKH

Analytes	Response Area Counts Reference Conc. mg/L	Response Area Counts Reference Conc. mg/L	Response Area Counts Reference Conc. mg/L	Response Area Counts Reference Conc. mg/L	Response Area Counts Reference Conc. mg/L	Response Area Counts Reference Conc. mg/L	Response Area Counts Reference Conc. mg/L	Correlation Coefficient
Mercury	0.000 0	0.0030096 0.0005	0.0068552 0.001	0.0127407 0.002	0.0264847 0.004	0.0677166 0.010	0.1341626 0.020	1.000

Specification Limits for correlation coefficient >0.995

DIGESTION BATCH SUMMARY

Digestion Batch # GDIG981229102000

Method Digestion by SW7470A
Test Code DHGSWA00

Extraction Start Date/Time 12/29/98 10:20:00
Extraction Stop Date/Time

Analyst RWG
Reviewer LAK

Sample	Project Sample ID	Lab Sample ID	Sample Size mL	Cleanup Method
1		9812742-01A	10	
2		9812742-02A	10	
3		9812742-03A	10	
4		9812742-04A	10	
5		9812742-05A	10	
6		9812742-06A	10	
7		9812742-07A	10	
8	IN-1 HCL	9812743-01A	10	
9	IN-2 HCL	9812743-02A	10	
10	IN-3 HCL	9812743-03A	10	
11	OUT-1 HCL	9812743-04A	10	
12	OUT-2 HCL	9812743-05A	10	
13	OUT-3 HCL	9812743-06A	10	
14	FIELD BLANK HCL	9812743-07A	10	
15				
16				
17				
18				
19				
20				

Quality Control	Project Sample ID	Lab Sample ID	Sample Size mL	Cleanup Method
Blank		BLK984626	10	
Detectability Check Sample		DCS987076	50	
Laboratory Control Sample		LCS987077	50	
Laboratory Control Sample Duplicate		LCSD987077	50	
Matrix Spike		9812742-08A	10	
Matrix Spike Duplicate		9812742-09A	10	

RESULTS

Digestion Batch # GDIG981229102000
Analysis Batch # AAZ4 81230090303

Project Sample ID IN-1 HCL
Lab Sample ID 9812743-01A
File # Z4123009-84
Method Metals Train Hg by SW7470A
Test Code HGCBTA00

Date Collected 12/02/98
Date Received 12/17/98
Date Prepared 12/29/98
Date Analyzed 12/30/98 12:31:00

Instrument Z4
Column
Analyst LAK
Reviewer LKH

Reporting Subset
Spikes Subset
Specs Subset

Matrix T
Report As received
% Moisture

Aliquot Mass/Volume 10 (g)
Extract/Digestate Volume 103.48 (mL)
Dilution Factor 5

Analyte	CAS #	Measured Concentration ug	Detection Limit ug	Reporting Limit ug
Mercury	7439-97-6	0.145	0.0295	0

RESULTS

Digestion Batch # GDIG981229102000
Analysis Batch # AAZ4 81230090303

Project Sample ID IN-2 HCL
Lab Sample ID 9812743-02A
File # Z4123009-85
Method Metals Train Hg by SW7470A
Test Code HGCBTA00

Date Collected 12/02/98
Date Received 12/17/98
Date Prepared 12/29/98
Date Analyzed 12/30/98 12:34:00

Instrument Z4
Column
Analyst LAK
Reviewer LKH

Reporting Subset
Spikes Subset
Specs Subset

Matrix T
Report As received
% Moisture

Aliquot Mass/Volume 10 (g)
Extract/Digestate Volume 178.98 (mL)
Dilution Factor 5

Analyte	CAS #	Measured Concentration ug	Detection Limit ug	Reporting Limit ug
Mercury	7439-97-6	0.242	0.0510	0

RESULTS

Digestion Batch # GDIG981229102000
Analysis Batch # AAZ4 81230090303

Project Sample ID IN-3 HCL
Lab Sample ID 9812743-03A
File # Z4123009-86
Method Metals Train Hg by SW7470A
Test Code HGCBTA00

Date Collected 12/03/98
Date Received 12/17/98
Date Prepared 12/29/98
Date Analyzed 12/30/98 12:36:00

Instrument Z4
Column
Analyst LAK
Reviewer LKH

Reporting Subset
Spikes Subset
Specs Subset

Matrix T
Report As received
% Moisture

Aliquot Mass/Volume 10 (g)
Extract/Digestate Volume 210.38 (mL)
Dilution Factor 5

Analyte	CAS #	Measured Concentration ug	Detection Limit ug	Reporting Limit ug
Mercury	7439-97-6	0.0210 J	0.0600	0

RESULTS

Digestion Batch # GDIG981229102000
Analysis Batch # AAZ4 81230090303

Project Sample ID OUT-1 HCL
Lab Sample ID 9812743-04A
File # Z4123009-87
Method Metals Train Hg by SW7470A
Test Code HGCBTA00

Date Collected 12/02/98
Date Received 12/17/98
Date Prepared 12/29/98
Date Analyzed 12/30/98 12:39:00

Instrument Z4
Column
Analyst LAK
Reviewer LKH

Reporting Subset
Spikes Subset
Specs Subset

Matrix T
Report As received
% Moisture

Aliquot Mass/Volume 10 (g)
Extract/Digestate Volume 143.06 (mL)
Dilution Factor 5

Analyte	CAS #	Measured Concentration ug	Detection Limit ug	Reporting Limit ug
Mercury	7439-97-6	0.157	0.0408	0

RESULTS

Digestion Batch # GDIG981229102000
Analysis Batch # AAZ4 81230090303

Project Sample ID OUT-2 HCL
Lab Sample ID 9812743-05A
File # Z4123009-88
Method Metals Train Hg by SW7470A
Test Code HGCBTA00

Date Collected 12/02/98
Date Received 12/17/98
Date Prepared 12/29/98
Date Analyzed 12/30/98 12:41:00

Instrument Z4
Column
Analyst LAK
Reviewer LKH

Reporting Subset
Spikes Subset
Specs Subset

Matrix T
Report As received
% Moisture

Analyte	CAS #	Aliquot Mass/Volume 10 (g) Extract/Digestate Volume 202.78 (mL) Dilution Factor 5 Measured Concentration ug	Detection Limit ug	Reporting Limit ug
Mercury	7439-97-6	0.152	0.0578	0

RESULTS

Digestion Batch # GDIG981229102000
Analysis Batch # AAZ4 81230090303

Project Sample ID OUT-3 HCL
Lab Sample ID 9812743-06A
File # Z4123009-89
Method Metals Train Hg by SW7470A
Test Code HGCBTA00

Date Collected 12/03/98
Date Received 12/17/98
Date Prepared 12/29/98
Date Analyzed 12/30/98 12:44:00

Instrument Z4
Column
Analyst LAK
Reviewer LKH

Reporting Subset
Spikes Subset
Specs Subset

Matrix T
Report As received
% Moisture

Aliquot Mass/Volume 10 (g)
Extract/Digestate Volume 201.12 (mL)
Dilution Factor 5

Analyte	CAS #	Measured Concentration ug	Detection Limit ug	Reporting Limit ug
Mercury	7439-97-6	0.141	0.0573	0

RESULTS

Digestion Batch # GDIG981229102000
Analysis Batch # AAZ4 81230090303

Project Sample ID FIELD BLANK HCL
Lab Sample ID 9812743-07A
File # Z4123009-90
Method Metals Train Hg by SW7470A
Test Code HGCBTA00

Date Collected 12/03/98
Date Received 12/17/98
Date Prepared 12/29/98
Date Analyzed 12/30/98 12:47:00

Instrument Z4
Column
Analyst LAK
Reviewer LKH

Reporting Subset
Spikes Subset
Specs Subset

Matrix T
Report As received
% Moisture

Aliquot Mass/Volume 10 (g)
Extract/Digestate Volume 250.2 (mL)
Dilution Factor 5

Analyte	CAS #	Measured Concentration ug	Detection Limit ug	Reporting Limit ug
Mercury	7439-97-6	0.0500 J	0.0713	0

LABORATORY BLANK INFORMATION

Digestion Batch # GDIG981229100000
Analysis Batch # AAZ4 81230090302

Lab Sample ID CCB
File # Z4123009-66
Method Mercury by SW7470A
Test Code HGCSWA00

Date Prepared 12/29/98
Date Analyzed 12/30/98 11:46:00

Instrument Z4
Column
Analyst LAK
Reviewer LKH

Reporting Subset
Spikes Subset
Specs Subset

Matrix W

Analyte	Aliquot Mass/Volume 50 (mL) Extract/Digestate Volume 50 (mL) Dilution Factor 1 Measured Conc. mg/L	Detection Limit mg/L	Reporting Limit mg/L
Mercury	-0.000050 J	0.000057	-1000

LABORATORY BLANK INFORMATION

Digestion Batch # GDIG981229100000
Analysis Batch # AAZ4 81230090303

Lab Sample ID CCB
File # Z4123009-83
Method Mercury by SW7470A
Test Code HGCSWA00

Date Prepared 12/29/98
Date Analyzed 12/30/98 12:29:00

Instrument Z4
Column
Analyst LAK
Reviewer LKH

Reporting Subset
Spikes Subset
Specs Subset

Matrix W

Analyte	Aliquot Mass/Volume 50 (mL) Extract/Digestate Volume 50 (mL) Dilution Factor 1 Measured Conc. mg/L	Detection Limit mg/L	Reporting Limit mg/L
Mercury	-0.000020 J	0.000057	-1000

LABORATORY BLANK INFORMATION

Digestion Batch # GDIG981229100000
Analysis Batch # AAZ4 81230090303

Lab Sample ID CCB
File # Z4123009-92
Method Mercury by SW7470A
Test Code HGCSWA00

Date Prepared 12/29/98
Date Analyzed 12/30/98 12:51:00

Instrument Z4
Column
Analyst LAK
Reviewer LKH

Reporting Subset
Spikes Subset
Specs Subset

Matrix W

Analyte	Aliquot Mass/Volume 50 (mL) Extract/Digestate Volume 50 (mL) Dilution Factor 1 Measured Conc. mg/L	Detection Limit mg/L	Reporting Limit mg/L
Mercury	0.0000300 J	0.000057	-1000

LABORATORY BLANK INFORMATION

Digestion Batch # GDIG981229100000
Analysis Batch # AAZ4 81230090300

Lab Sample ID ICB
File # Z4123009-9
Method Mercury by SW7470A
Test Code HGCSWA00

Date Prepared 12/29/98
Date Analyzed 12/30/98 09:23:00

Instrument Z4
Column
Analyst LAK
Reviewer LKH

Reporting Subset
Spikes Subset
Specs Subset

Matrix W

Analyte	Aliquot Mass/Volume 50 (mL) Extract/Digestate Volume 50 (mL) Dilution Factor 1 Measured Conc. mg/L	Detection Limit mg/L	Reporting Limit mg/L
Mercury	-0.000020 J	0.000057	-1000

LABORATORY BLANK INFORMATION

Digestion Batch # GDIG981229102000
Analysis Batch # AAZ4 81230090303

Lab Sample ID BLK984626
File # Z4123009-67
Method Metals Train Hg by SW7470A
Test Code HGCBTA00

Date Prepared 12/29/98
Date Analyzed 12/30/98 11:49:00

Instrument Z4
Column
Analyst LAK
Reviewer LKH

Reporting Subset
Spikes Subset
Specs Subset

Matrix T

Analyte	Aliquot Mass/Volume 10 (g) Extract/Digestate Volume 50 (mL) Dilution Factor 5 Measured Conc. ug	Detection Limit ug	Reporting Limit ug
Mercury	ND	0.0142	0

12/30/98 15:48:06

LABORATORY CONTROL SAMPLE

Digestion Batch # GDIG981229102000

Analysis Batch # AAZ4 81230090303

Work Order # 9812743

Method Mercury by SW7470A

Test Code HGCSWA00

Date Prepared 12/29/98

Date Analyzed 12/30/98 11:57:00

Instrument Z4

Column

Analyst LAK

Reviewer LKH

Reporting Subset

Spikes Subset

Specs Subset

Matrix W

Report As

% Moisture

Aliquot Mass or Vol 50 (mL)

Extract Mass or Vol 50 (mL)

Control Std. #	Vol. Added	Surrogate Sol'n #	Vol. Added

Analyte	LCS Lab Sample ID LCS987077 File ID Z4123009-69			LCS Duplicate Lab Sample ID LCSD987077 File ID Z4123009-70			Recovery Spec. Limits		RPD	
	Spiked Conc. mg/L	Measured Conc. mg/L	Rec. %	Spiked Conc. mg/L	Measured Conc. mg/L	Rec. %	Low %	High %	Result %	Spec. Limit %
Mercury	0.0100	0.0106	106	0.0100	0.0106	106	82	123	0	13

MATRIX SPIKE(S)

Digestion Batch # GDIG981229102000
Analysis Batch # AAZ4 81230090303

Work Order # 9812743

Project Sample ID IN-3 HNO3/H2O2
Method Metals Train Hg by SW7470A
Test Code HGCBTA00

Date Collected 12/03/98
Date Received 12/17/98
Date Prepared 12/29/98
Date Analyzed 12/30/98 12:14:00

Instrument Z4
Column
Analyst LAK
Reviewer LKH

Reporting Subset
Spikes Subset
Specs Subset

Matrix T
Report As received
% Moisture

Spike Sol'n #	Vol. Added
Surrogate Sol'n	**Vol. Added**

Sample	Spiked Sample	Spiked Sample Dup	Recovery Specification Limits	RPD
Lab Sample ID 9812742-03A	Lab Sample ID 9812742-08A MS	Lab Sample ID 9812742-09A MSD		
File # Z4123009-73	File # Z4123009-76	File # Z4123009-77		
Aliquot Mass/Vol 10 (g)	Aliquot Mass/Vol 10 (g)	Aliquot Mass/Vol 10 (g)		
Extract Mass/Vol 180.46 (mL)	Extract Mass/Vol 180.46 (mL)	Extract Mass/Vol 180.46 (mL)		
Dil Fact. 5	Dil Fact. 5	Dil Fact. 5		

Analyte	Spike Sol'n Conc. mg/L	Measured Conc. ug	Spiked Conc. ug	Measured Conc. ug	Rec. %	Spiked Conc. ug	Measured Conc. ug	Rec. %	Low %	High %	Result %	Specification Limit %
Mercury	0.002	0.334	1.80	2.36	112	1.80	2.28	108	70	130	3.6	25

CONTINUING (OR DAILY) CALIBRATION VERIFICATION

Analysis Batch # AAZ4 81230090302
Initial Calibration # Z4981230090300

Lab Sample ID CCV
File # Z4123009-65
Method Mercury by SW7470A
Test Code HGCSWA00

Date Analyzed 12/30/98 11:44:00

Reporting Subset ___
Spikes Subset ___
Specs Subset ___

Instrument Z4
Analyst LAK
Reviewer LKH

Analyte	Measured Concentration mg/L	Reference Concentration mg/L	Recovery %	Recovery Specification Limits	
				Low %	High %
Mercury	0.0102	0.0100	102	90	110

CONTINUING (OR DAILY) CALIBRATION VERIFICATION

Analysis Batch # AAZ4 81230090303
Initial Calibration # Z4981230090300

Lab Sample ID CCV
File # Z4123009-82
Method Mercury by SW7470A
Test Code HGCSWA00

Date Analyzed 12/30/98 12:26:00

Reporting Subset ___
Spikes Subset ___
Specs Subset ___

Instrument Z4
Analyst LAK
Reviewer LKH

Analyte	Measured Concentration mg/L	Reference Concentration mg/L	Recovery %	Recovery Specification Limits	
				Low %	High %
Mercury	0.0104	0.0100	104	90	110

CONTINUING (OR DAILY) CALIBRATION VERIFICATION

Analysis Batch # AAZ4 81230090303
Initial Calibration # Z4981230090300

Lab Sample ID CCV
File # Z4123009-91
Method Mercury by SW7470A
Test Code HGCSWA00

Date Analyzed 12/30/98 12:49:00

Reporting Subset ___
Spikes Subset ___
Specs Subset ___

Instrument Z4
Analyst LAK
Reviewer LKH

Analyte	Measured Concentration mg/L	Reference Concentration mg/L	Recovery %	Recovery Specification Limits	
				Low %	High %
Mercury	0.0105	0.0100	105	90	110

CONTINUING (OR DAILY) CALIBRATION VERIFICATION

Analysis Batch # AAZ4 81230090300
Initial Calibration # Z4981230090300

Lab Sample ID ICV
File # Z4123009-8
Method Mercury by SW7470A
Test Code HGCSWA00

Date Analyzed 12/30/98 09:20:00

Reporting Subset ___
Spikes Subset ___
Specs Subset ___

Instrument Z4
Analyst LAK
Reviewer LKH

Analyte	Measured Concentration mg/L	Reference Concentration mg/L	Recovery %	Recovery Specification Limits	
				Low %	High %
Mercury	0.00951	0.0100	95	90	110

ANALYTICAL SPIKE(S)

Digestion Batch # GDIG981229102000
Analysis Batch # AAZ4 81230090303

Work Order # 9812743

Project Sample ID IN-3 HNO3/H2O2
Method Metals Train Hg by SW7470A
Test Code HGCBTA00

Date Collected 12/03/98
Date Received 12/17/98
Date Prepared 12/29/98
Date Analyzed 12/30/98 12:09:00

Instrument Z4
Column
Analyst LAK
Reviewer LKH

Reporting Subset
Spikes Subset
Specs Subset

Matrix T
Report As received
% Moisture

Spike Sol'n #	Vol. Added
Surrogate Sol'n	**Vol. Added**

Sample	Spiked Sample	Spiked Sample Dup
Lab Sample ID 9812742-03A	Lab Sample ID 9812742-03A	Lab Sample ID
File # Z4123009-73	File # Z4123009-75	File #
Aliquot Mass/Vol 10 (g)	Aliquot Mass/Vol 10 (g)	Aliquot Mass/Vol
Extract Mass/Vol 180.46 (mL)	Extract Mass/Vol 180.46 (mL)	Extract Mass/Vol
Dil Fact. 5	Dil Fact. 6.25	Dil Fact.

Analyte	Spike Sol'n Conc. mg/L	Sample Measured Conc. ug	Spiked Sample Spiked Conc. ug	Spiked Sample Measured Conc. ug	Spiked Sample Rec. %	Spiked Sample Dup Spiked Conc.	Spiked Sample Dup Measured Conc.	Spiked Sample Dup Rec. %	Recovery Specification Limits Low %	Recovery Specification Limits High %	RPD Result %	RPD Specification Limit %
Mercury	.002	0.334	2.26	2.83	111				85	115		

12/30/98 15:48:06

SERIAL DILUTION CHECK

Digestion Batch # GDIG981229102000
Analysis Batch # AAZ4 81230090303

Work Order # 9812743
Page 31

Project Sample ID
Method Metals Train Hg by SW7470A
Test Code HGCBTA00

Date Prepared 12/29/98
Date Analyzed 12/30/98 12:07:00

Instrument Z4
Analyst LAK
Reviewer LKH

Reporting Subset
Spikes Subset
Specs Subset

Matrix T
Report As received

	Sample Result Lab Sample ID 9812742-03A Dilution Factor 5		Diluted Sample Result Lab Sample ID 9812742-03A Dilution Factor 25		% Difference	
Analyte	Measured Concentration ug	Detection Limit ug	Measured Concentration ug	Detection Limit ug	Result	Specification Limit %
Mercury	0.334	0.0514	0 J	0.257	100 Q	10

ANALYTICAL PROTOCOL SUMMARY
COMMENTS/NARRATIVE

Method Mercury by SW-846 Specification# HGCS

Lab Sample ID File ID	Project Sample ID/Description	Analyte	Flag	Comment/Narrative	Corrective Action

01/05/99 16:58:41

RADIAN ANALYTICAL SERVICES
FPAS REPORT
TABLE OF CONTENTS

Work Order # 9812713

Client DOE/EPRI
Facility SEYMOUR GENERATING STATION
Client Code SEYMOUR HG

Certified By [signature]
Date 1/6/99

Report Form	Analytical Batch ID	Pages From	Pages To
Work Order Summary		1	2
Work Order Comments		3	3
State Certifications		4	4
Flag Definitions		5	5
Protocol Summary for Mercury by SW-846		6	6
Results Summary		7	8
Initial Calibration		9	9
Extraction Batch Summary		10	10
Analysis Batch Summary	AAZ4__90105085802	11	12
Results		13	19
Laboratory Blank Information		20	24
Laboratory Control Samples		25	25
Calibration Verification		26	29
Analytical Spikes		30	30
Serial Dilutions		31	31
Comments/Narrative		32	32
Quality Control Exception Report Summary		33	33

Filter Hg

01/05/99 16:58:41

WORK ORDER SUMMARY

Report RADIAN INTERNATIONAL, LLC
To PO BOX 201088
AUSTIN, TX 78720-1088
Attention CARL RICHARDSON

Client Code SEYMOUR HG
Client DOE/EPRI
Facility SEYMOUR GENERATING STATION
Work ID MERCURY/CHLORIDE

Work Order # 9812713
Page 1

RCN 66035702.0202

Prepared By Radian International, LLC
14046 Summit Dr., Bldg. B
P. O. Box 201088
Austin, TX 78720-1088

CSC DPMAXWELL

Case # NA
SDG # NA
RAS # 81201BDPM

New York ELAP ID #: 10915

Project Sample ID/ Description	Lab Sample ID	Test Code(s)	Method Desciption
IN-1 FILTER	01A	COMPME00	Compositing for Metals
IN-1 PR	01B	COMPME00	Compositing for Metals
IN-1	01C COMPOSITE	DFMBTA00	40 CFR 266 App.IX (3.1)
		HGCBMA00	Mercury by CVAAS
IN-2 FILTER	02A	COMPME00	Compositing for Metals
IN-2 PR	02B	COMPME00	Compositing for Metals
IN-2	02C COMPOSITE	DFMBTA00	40 CFR 266 App.IX (3.1)
		HGCBMA00	Mercury by CVAAS
IN-3 FILTER	03A	COMPME00	Compositing for Metals
IN-3 PR	03B	COMPME00	Compositing for Metals
IN-3	03C COMPOSITE	DFMBTA00	40 CFR 266 App.IX (3.1)
		HGCBMA00	Mercury by CVAAS
OUT-1 FILTER	04A	COMPME00	Compositing for Metals
OUT-1 PR	04B	COMPME00	Compositing for Metals
OUT-1	04C COMPOSITE	DFMBTA00	40 CFR 266 App.IX (3.1)
		HGCBMA00	Mercury by CVAAS
OUT-2 FILTER	05A	COMPME00	Compositing for Metals
OUT-2 PR	05B	COMPME00	Compositing for Metals
OUT-2	05C COMPOSITE	DFMBTA00	40 CFR 266 App.IX (3.1)
		HGCBMA00	Mercury by CVAAS
OUT-3 FILTER	06A	COMPME00	Compositing for Metals
OUT-3 PR	06B	COMPME00	Compositing for Metals
OUT-3	06C COMPOSITE	DFMBTA00	40 CFR 266 App.IX (3.1)

WORK ORDER SUMMARY (Cont'd)

Report RADIAN INTERNATIONAL, LLC
To PO BOX 201088
AUSTIN, TX 78720-1088
Attention CARL RICHARDSON

Client Code SEYMOUR HG
Client DOE/EPRI
Facility SEYMOUR GENERATING STATION
Work ID MERCURY/CHLORIDE

Work Order # 9812713
Page 2

RCN 66035702.0202

Prepared Radian International, LLC
By 14046 Summit Dr., Bldg. B
P. O. Box 201088
Austin, TX 78720-1088

CSC DPMAXWELL

Case # NA
SDG # NA
RAS # 81201BDPM

New York ELAP ID #: 10915

Project Sample ID/ Description	Lab Sample ID	Test Code(s)	Method Desciption
OUT-3	06C COMPOSITE	HGCBMA00	Mercury by CVAAS
FIELD BLANK FILTER	07A	COMPME00	Compositing for Metals
FIELD BLANK OUTLET PR	07B	COMPME00	Compositing for Metals
FIELD BLANK	07C COMPOSITE	DFMBTA00	40 CFR 266 App.IX (3.1)
		HGCBMA00	Mercury by CVAAS
FIELD BLANK INLET PR	08A	HOLDSM00	Hold for Possible Analysis

STATE CERTIFICATIONS

State	Agency	Certification ID
Arkansas	Department of Pollution Control and Ecology	
California	California Environmental Laboratory Accreditation Program	2257
Kansas	Kansas Department of Health and Environment	E-10165
Louisiana	Louisiana Department of Health and Hospitals	LA 97-29
North Carolina	Department of Environment, Health and Natural Resources	302
New Jersey	New Jersey Department of Environmental Protection	82005
New York	New York State Department of Health	10915
Oklahoma	Oklahoma Water Resources Board	8720
South Carolina	Department of Health and Environmental Control	82003001
Utah	Utah Department of Health	RADC
Wisconsin	Wisconsin Department of Natural Resources	99885260

FLAG DEFINITIONS

Flag	Definition
< DL	Result less than stated Detection Limit and greater than or equal to zero.
NA	Analyte concentration not available for this analysis.
NC	RPD and/or % Recovery not calculated. See Narrative for explanation.
ND	Not detected. No instrument response for analyte or result less than zero.
NR	Not reported. Result greater than or equal to stated Detection Limit and less than specified Reporting Limit.
NS	Analyte not spiked.
A	Presence of hydrocarbon mix eluting in the Lube Oil range. The pattern does not match that of Lube Oil.
B	Analyte detected in method blank at concentration greater than the Reporting Limit (and greater than zero).
C	Confirming data obtained using second GC column or GCMS.
D	Presence of hydrocarbon mix eluting in the Diesel range. The pattern does not match that of Diesel.
E	Analyte concentration exceeded calibration range.
F	Interference or coelution suspected. See Narrative for explanation.
G	Presence of hydrocarbon mix eluting in the Jet Fuel range. The pattern does not match that of Jet Fuel.
H	Presence of analyte previously confirmed by historical data.
I	Analyte identification suspect. See Narrative for explanation.
J	Result is less than stated Detection Limit but greater than or equal to specified Reporting Limit.
K	Peak did not meet method identification criteria. Analyte not detected on other GC column.
M	Result modified from previous Report. See Narrative for explanation.
P	Analyte not confirmed. Results from primary and secondary GC columns differ by greater than a factor of 3.
Q	QC result does not meet tolerance in Protocol Specification.
R	Result reported elsewhere.
S	Analyte concentration obtained using Method of Standard Additions (MSA).
T	Second column confirmational analysis not performed.
X	See Narrative for explanation.
Y	See Narrative for explanation.
Z	See Narrative for explanation.

ANALYTICAL PROTOCOL SUMMARY

Work Order # 9812743

Client DOE/EPRI

Facility SEYMOUR GENERATING STATION

Client Code SEYMOUR HG

Method Mercury by SW-846

Project Sample ID/Description	Lab Sample ID	Test Code(s)	Extraction/Digestion Batch #	Analysis Batch #
FIELD BLANK HCL	9812743-07A	HGCBTA00	GDIG981229102000	AAZ4__81230090303
IN-1 HCL	9812743-01A	HGCBTA00	GDIG981229102000	AAZ4__81230090303
IN-2 HCL	9812743-02A	HGCBTA00	GDIG981229102000	AAZ4__81230090303
IN-3 HCL	9812743-03A	HGCBTA00	GDIG981229102000	AAZ4__81230090303
OUT-1 HCL	9812743-04A	HGCBTA00	GDIG981229102000	AAZ4__81230090303
OUT-2 HCL	9812743-05A	HGCBTA00	GDIG981229102000	AAZ4__81230090303
OUT-3 HCL	9812743-06A	HGCBTA00	GDIG981229102000	AAZ4__81230090303

Book No. 32009 TITLE 12/15/98 - Pirk/Seymour KMnO4

TITLE

From Page No.

Analysis of Pirkey + Seymour KMnO4 samples

Calibration

Std	ppb	Pk Height	Blnk Corr
B	0	0.0001; 0.0009; 0.0009	0
1	0.06	0.0019; 0.0019; 0.0020	0.0013
2	0.25	0.0048; 0.0050; 0.0049	0.0043
3	1	0.0168; 0.0168; 0.0168	0.0161
4	3	0.0486; 0.0491; 0.0486	0.0481
5	5	0.0805; 0.0804; 0.0804	0.0798
(6)	7	0.1133; 0.1129; 0.1132	* Run as sample [predicted value of 7.049
QC-3	3	0.0508; 0.0499 0.0505	3.110 ppb

Instrument curve

$r^2 = 1.0000$

Samples

Based on computer generated curve

DF not factored

Name	ml	DF	Bottle Sample Mass	Pk Ht	(corr. Ave)	µg/L	µg
S-1-In	10	5	568.37	0.0561; 0.0532; 0.0533	(0.0536)	3.349	1.90
S-1-In dup	10	5	" "	0.0534; 0.0512; 0.0498	(0.0508)	3.178	1.81
S-1-out	10	5	548.46	0.0796; 0.0798; 0.0785	(0.0787)	4.925	2.70
S-2-In	10	5	547.51	0.0985; 0.0972; 0.0977	(0.0972)	6.087	3.33
S-2-In(spk-1)	10 + 1ppb	-	" "	0.1110; 0.1102; 0.1115	(0.1102)		
QC-3		1	—	0.0513; 0.0503; 0.0503	(0.0500)	3.126	(104.2%)
S-2-out	10	5	577.56	0.0860; 0.0839; 0.0843	(0.0841)	5.265	3.04
S-3-In	10	5	701.51	0.0593; 0.0583; 0.0583	(0.0580)	3.625	
S-3-out	10	5		0.0597; 0.0597; 0.0605	(0.0593)	3.710	
P-1-IN	10	5		0.2140; 0.2201; 0.2223	(.2182)	{3.936}	
QC-3	—	—	—	0.0636; 0.0502; 0.0513	(3.400)		
P-1-IN (dup)	10	5	627.4	0.2201; 0.2193; 0.2197	~~(13.740)~~ (.2190)	13.740	
P-1 Out	10	5		0.1649; 0.1603; 0.1597	(0.1610)	10.095	
P-2-In	10	5		0.1444; 0.1422; 0.1422	(0.1423)	~~7.279~~ 8.922	
P-2-out	10	5		0.1168; 0.1168; 0.1169	(0.1162)	7.280	
P-3-In	10	5		0.1404; 0.1437; 0.1419	(0.1413)	8.861	
QC-3	10	5		0.0505; 0.0507; 0.0509	(0.500)	3.127	
P-3-out	10	5		0.0690; 0.0685; 0.0678	(0.0678)	4.242	
QC-3	10	5		0.0515; 0.0509; 0.0509	(0.0504)	3.154	

Ave 3.264 (5.2%)

To Page No.

Witnessed & Understood by me,

Date 12/15/98

Invented by

Date

Recorded by

Witnessed & Unde

From Page No.

Std
Blank
S1
S2
S3
S4
S5
S6
QC-3

SAMPLE ID
S1-In
S1-In dup
S1-out
S2-In
QC-3
S2-In spike
S2-out
S3-In
S3-out
P1-In
QC-3
P1-In dup
P1-out
P2-In
P2-out
P3-In
QC-3
P3-out
QC-3

Raw Notebook and Spreadsheet Data

From Ontario Hydro Impinger Analyses

Conducted in Radian Project Laboratory

Book No. 32309 TITLE 12/14 - Pirk/Sey. KMnO4

TITLE 12/14

From Page No.

Analysis of Pirkey + Seymour O.H. samples

Calibration of pipette t.p (1 ml)

T = 65.2 °F

masses of 1.0 ml pipettes : 1.00, 0.99; 1.01; 0.99; 1.00; 0.99

Note: the spiked samples consist of 50.0 mL sample + 0.500 mL of 4 ppb Std. (the 0.500 mL vol was not accounted for before adding it. Ex. 49.5 mL sample + 0.500 mL Std.)

Calibration

Std #	ppb (mg/L)	pk. height	
B	0	0.0003; 0.0003; 0.0008	Stds: Hg AA std - EM (11-98) Lot A7045027 (HNO_3)
1	0.06	0.0016; 0.0018; 0.0017	
2	0.25	0.0042; 0.0044; 0.0044	
3	1	0.0145; 0.0150; 0.0149	
4	3	0.0423; 0.0438; 0.0440	
5	5	0.0708; 0.0724; 0.0730	
QC-3	3	(104.51%) 0.0494; 0.0461; 0.0456	Hg AA std - Mallinckrodt (PAL Lab) Lot H548 KJBJP
QC-2	3	(107.52%) 0.0481; 0.0466; 0.0477	Mallinckrodt LOT H548 KMHM-P (Hg AA Std)

Samples

name	mL	bottle weight	pk. ht.
S-1-In	50	961.32 - 392.95	0.1103; 0.1160; 0.1170
S-1-dup	50	~~939.54 - 391.08~~	~~0.1160~~ 0.1198; 0.1176; 0.1171
S-1-out	50	939.54 - 391.08	0.2133; 0.2266; 0.2171
S-2-In	50	938.73 - 391.22	0.3686; 0.3619; 0.3616 25.1041 ppb
QC-3	~~50~~		0.0799; 0.0466; 0.0470 (106.71%)
S-2-In spike	50		0.3871; 0.4023; 0.3985
S-2-out	50	(969.60 - 392.04)	0.3729; 0.3646; 0.3633
S-3-In	50	~~399.92~~ (1101.43 - 399.92)	0.1646; 0.1553; 0.1551

To Page No.

Witnessed & Understood by me,

Date 12/14/98

Invented by

Date

Recorded by Martin Richard

From Page No.

name

S-3-out
KMnO4 blank
QC-3 ~~(dup)~~
P-1-In
P-1-In dup
P-1-Out
P-1-out spk
P-2-In
QC-3 (dup)
P-2-Out
P-3-In
P-3-In dup
P-3-Out
QC (dup)

Std
Blank
S1
S2
S3
S4
S5
QC-3
QC-2

SAMPLE ID
S1-In
S1-In dup
S1-out
S2-In
QC-3
S2-In spike
S2-out
S3-In
S3-out
KMnO4 blank
QC-3 dup
P1-In dup
P2-In
QC-3 dup
P2-out
QC-3 dup

Witnessed & Under

TITLE 12/14 continued

Book No. 32309

From Page No.

name	ML	bottle wt.	pk ht.
S-3-out	50	1106.13 - 401.59	0.2569 ; 0.2619 ; 0.2631
KMnO4 blank	50		0.0028 ; 0.0010 ; 0.0010
QC-3 ~~(dup)~~	~~50~~		0.0471 ; 0.0458 ; 0.0462 (104.86%)
P-1-In	50	1038.8 - 411.40	0.0157 ; 0.0148 ; ~~0.013~~ 0.0143
P-1-In dup	50	"	0.2417 ; 0.2482 ; 0.2454
P-1-Out	50	959.3 - 408.9	0.0169 ; 0.0158 ; 0.0157
P-1-out spk	50	"	0.0298 ; 0.0303 ; 0.0301
P-2-In	50	960.6 - 411.1	0.1081 ; 0.1106 ; 0.1119
QC-3 (dup)	~~50~~		0.0465 ; 0.0463 ; 0.0467 (106.02%)
P-2-Out	50	1113.3 - 410.3	0.0890 ; 0.0971 ; 0.0943
P-3-In	50	969.3 - 409.0	0.0424 ; 0.0359 ; 0.0365
P-3-In dup	50	"	0.0400 ; 0.0402 ; 0.0407
P-3-Out	50	1262.1 - 411.9	0.0660 ; 0.0684 ; 0.0681
QC (dup)	—		0.0485 ; 0.0463 ; 0.0454 (104.51%)

Std	pk ht	pk ht	avg pk ht	Corrected pk ht	conc (ug/L)	% recovery
Blank	0.0008	0.0008	0.0008	0	0	
S1	0.0018	0.0017	0.00175	0.00095	0.06	
S2	0.0044	0.0044	0.0044	0.0036	0.25	
S3	0.015	0.0149	0.01495	0.01415	1	
S4	0.0438	0.0439	0.04365	0.04305	3	
S5	0.0724	0.073	0.0727	0.0719	5	
QC-3	0.0461	0.0456	0.04585	0.04505	3	
QC-2	0.0466	0.0477	0.04715	0.04635	3	

	QC mass. (Hg)	
QC-3	3.13816385	104.54
QC-2	3.22980855	107.55

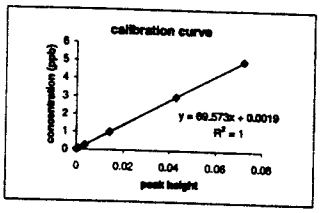

SAMPLE ID	pk ht	pk ht	avg pk ht	Corrected pk ht	DF	ug/L in sample	Comment		Total sample vol.(mL)	ug Hg/sample
S1-In	0.1160	0.1170	0.1165	0.1157	1	8.051			568.37	4.576
S1-In dup	0.1176	0.1171	0.11735	0.1166	1	8.111			568.37	4.610
S1-out	0.2206	0.2171	0.22185	0.2211	1	15.381			546.46	8.436
S2-In	0.3619	0.3616	0.36175	0.3610	1	25.114			547.51	13.750
QC-3	0.0466	0.0470	0.0468	0.0460	1	3.202	% recov=	106.74	-	-
S2-In spike	0.4023	0.3985	0.4004	0.3996	1	27.803			547.51	15.223
S2-out	0.3646	0.3633	0.36395	0.3632	1	25.267			577.56	14.593
S3-In	0.1553	0.1551	0.1552	0.1544	1	10.744			701.51	7.537
S3-out	0.2619	0.2631	0.2625	0.2617	1	18.209			704.54	12.829
KMnO4 blank	0.001	0.001	0.0010	-	1	-			-	-
QC-3 dup	0.0458	0.0462	0.0460	0.0452	1	3.147	% recov=	104.89	-	-
[redacted]										
P1-In dup	0.2482	0.2454	0.2468	0.2460	1	17.117			627.4	10.739
[redacted]										
P2-In	0.1106	0.1119	0.1113	0.1105	1	7.688			549.5	4.224
QC-3 dup	0.0463	0.0467	0.0465	0.0457	1	3.181	% recov=	106.05	-	
P2-out	0.0971	0.0943	0.0957	0.0949	1	6.604			703.0	4.643
[redacted]										
QC-3 dup	0.0463	0.0454	0.0459	0.0451	1	3.136	% recov=	104.54	-	

To Page No.

Witnessed & Understood by me,

Date 12/14/88

Invented by

Recorded by Melinda Rice

Date

TITLE _____ Book No. 32509

From Page No.___

12/15/98 Data

Std	pk ht	pk ht	ave pk ht	Corrected pk ht	conc (ug/L)	% recovery
Blank	0.0009	0.0009	0.0009	0	0	
S1	0.0019	0.002	0.00195	0.00105	0.06	
S2	0.0049	0.005	0.00495	0.00405	0.25	
S3	0.0168	0.0168	0.0168	0.0159	1	
S4	0.0491	0.0486	0.04885	0.04795	3	
S5	0.0804	0.0804	0.0804	0.0795	5	
S6	0.1129	0.1132	0.11305	0.11215	7	
QC-3	0.0499	0.0505	0.0502	0.0493	3	
					QC mass. (Hg)	
				QC-3	3.085301	102.84

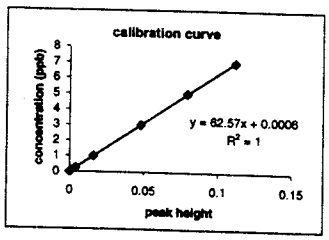

SAMPLE ID	pk ht	pk ht	ave pk ht	Corrected pk ht	DF	ug/L in sample	Comment		Total sample vol.(mL)	ug Hg/sample
S1-In	0.0532	0.0533	0.05325	0.05235	5	16.381			568.37	9.310
S1-In dup	0.0512	0.0498	0.0505	0.0496	5	15.520	%RPD=	5.39	568.37	8.821
S1-out	0.0796	0.0785	0.07915	0.0783	5	24.484			548.46	13.428
S2-In	0.0972	0.0977	0.09745	0.0966	5	30.209			547.51	16.540
QC-3	0.0503	0.0503	0.0503	0.0494	-	3.092	% recov=	103.05	-	-
S2-In spike	0.1102	0.1115	0.1109	0.1100	5	34.401	% recov=	83.90	547.51	18.835
S2-out	0.0839	0.0843	0.0841	0.0832	5	26.032			577.56	15.035
S3-In	0.0583	0.0583	0.0583	0.0574	5	17.961			701.51	12.600
S3-out	0.0597	0.0605	0.0601	0.0592	5	18.524			704.54	13.051
P1-In	0.2201	0.2223	0.2212	0.2203	5	68.924			627.4	43.243
QC-3	0.0502	0.0513	0.0508	0.04985	-	3.120	% recov=	103.99	-	-
P1-In dup	0.2193	0.2197	0.2195	0.2186	5	68.392	%RPD=	1.48	627.4	42.909
P1-out	0.1603	0.1597	0.1600	0.1591	5	49.777			550.4	27.398
P2-In	0.1422	0.1422	0.1422	0.1413	5	44.209			549.5	24.293
P2-out	0.1168	0.1169	0.1169	0.11585	5	36.278			703.0	25.503
P3-In	0.1437	0.1419	0.1428	0.1419	5	44.396			560.3	24.875
QC-3	0.0507	0.0509	0.0508	0.0499	-	3.123	% recov=	104.09	-	
P3-out	0.0685	0.0678	0.0682	0.0673	5	21.042			850.2	17.890
QC-3	0.0509	0.0509	0.0509	0.0500	-	3.129	% recov=	104.30	-	

To Page No.___

Witnessed & Understood by me,	Date 12/15/98	Invented by	Date
		Recorded by [illegible]	

From Page No.

Calibration

Std	ppb	pk. height	~~blank corr.~~
B	0	0.0012; 0.0022; 0.0022	
1	0.06	0.0032; 0.0032; 0.0034	
2	0.25	0.0070; 0.0071; 0.0069	
3	1	0.0186; 0.0180; 0.0182	
4	3	0.0510; 0.0511; 0.0514	
5	5	0.0841; 0.0856; 0.0842	
(6)	7	0.1152; 0.1152; 0.1175	
QC-3	3	0.0520; 0.0514; 0.0514	

samples

Name	mL	DF	Bottle sample mass	~~pt~~	pk. ht.	(corr. Avg.)	ug/L
P1-In	2.5	20	627.40		0.0564; 0.0564; 0.0557	(0.0563)	3.281
P1-Indup	"	"	"		0.0564; 0.0565; 0.0563	(0.0564)	3.297
P1-out	5	10	550.40		0.0475; 0.0473; 0.0480	(0.0457)	2.763
P2-In	5	10	549.50		0.0759; 0.0733; 0.0754	(0.0729)	4.418
~~P2-Out~~	~~5~~	~~10~~	~~703.00~~				
QC-3	—	—	—		0.0526; 0.0511; 0.0516	(0.0499)	3.015 (99.8%)
P2-out	5	10	703.0		0.0662; 0.0658; 0.0647	(0.0637)	3.855
P2-out spike	5	10	703.0		0.0759; 0.0755; 0.0769	(0.0742)	4.494
P3-In	5	10	560.3		0.0792; 0.0812; 0.0813	(0.0787)	4.766
P3-Out	5	10	850.2		0.0402; 0.0400; 0.0396	(0.0381)	2.297
QC-3	—	—	—		0.0525; 0.0521; 0.0516	(0.502)	3.032

To Page No.

Witnessed & Understood by me, | Date 12/16/98 | Invented by | Date | Recorded by Mark Pit

TITLE

From Page No.

Std
Blank
S1
S2
S3
S4
S5
S6
QC-3

SAMPLE
P1-In
P1-In
P1-out
P2-In
QC-3
P2-out
P2-out
P3-In
P3-out
QC-3

Witnessed & Unde

Project No. _____
Book No. 32309 TITLE 12/17/98 - KCl (Pirkey & Seymour)

From Page No. ___

Calibration

Std.	ppb	pk. height	(corrected) Avg
B	0	0.0010 ; 0.0020 ; 0.0018	0.0016 - 0
1	0.06	0.0031 ; 0.0030 ; 0.0029	0.0014
2	0.25	0.0058 ; 0.0059 ; 0.0058	0.0043
3	1	0.0182 ; 0.0181 ; 0.182	0.0166
4	3	0.0518 ; 0.0509 ; 0.0509	0.0496
5	5	0.0867 ; 0.0841 ; 0.0858	0.0840
(6)	7	0.1196 ; 0.1184 ; 0.1174	0.1169
QC-3	3	0.0524 ; 0.0515 ; 0.0521	0.0504 ~~3.01 (95%)~~ 3.0205 (100.68%)

Samples

Name	ml	DF	bottle mass (g)	pk. height (corr. Avg)	ug/L
S1-In	10	5	610.7	0.0216 ; 0.0189 ; 0.0189 (0.0182)	1.886
S1-In dup	10	5	610.7	0.0193 ; 0.0189 ; 0.0188 (0.0174)	1.037
S1-out	10	5	713.5	0.0029 ; 0.0030 ; 0.0028 (0.0013)	0.075
S2-In	10	5	606.87	0.0305 ; 0.0305 ; 0.0305 (0.0290)	1.733
~~S2-In QC~~	—	—	—	0.0522 ; 0.0519 ; 0.0519 (0.0504)	3.012 (100.8%)
S2-In spike	10	5	606.87	0.0479 ; 0.0476 ; 0.0476 (0.0462)	2.761 (103.0%)
S2-Out	10	5	693.23	0.0037 ; 0.0033 ; 0.0033 (0.0019)	0.109
S3-In	10	5	631.63	0.0328 ; 0.0325 ; 0.0320 (0.0309)	1.843
S3-Out	10	5	757.74	0.0036 ; 0.0033 ; 0.0035 (0.0019)	0.109
~~QC~~					
pirkey field blank	10	5	451.10	0.0033 ; 0.0032 ; 0.0032 (0.0016)	0.094
QC	—	—	—	0.0515 ; 0.0521 ; 0.0522 (0.0504)	3.010 (101.4%)
P1-In	10	5	573.0	0.1030 ; 0.1023 ; 0.1015 (0.1007)	6.021
P1-In dup	10	5	573.0	0.1038 ; 0.1014 ; 0.1017 (0.1007)	6.023
P1-In-3	10	5	159.4	0.0053 ; 0.0046 ; 0.0044 (0.0032)	0.187
P1-Out	10	5	682.8	0.0061 ; 0.0059 ; 0.0059 (0.0044)	0.258
P1-out spike	10	5	682.8	0.0227 ; 0.0224 ; 0.0225 (0.0209)	1.250 (99.7%)
QC	—	—	—	0.0520 ; 0.0515 ; 0.0521 (0.0503)	3.005 (100.6%)
P2-In	10	5	794.3	0.0655 ; 0.0647 ; 0.0652 (0.0636)	3.802
P2-Out	10	5	735.3	0.0053 ; 0.0049 ; 0.0050 (0.0035)	0.208
P3-In	10	5	565.5	0.0890 ; 0.0897 ; 0.0897 (0.0879)	5.257

To Page No. ___

Witnessed & Understood by me. | Date 12/17/98 | Invented by | Date | Recorded by [signature]

TITLE 12/17

From Page No. ___

Samples

Name
P3-out
Pirkey KCl
reagent blank
QC

P3-out b

Std
Blank
S1
S2
S3
S4
S5
S6
QC-3

SAMPLE ID
S1-In
S1-In dup
S1-out
S2-In
QC-3
S2-In spike
S2-out
S3-In
S3-out
pirkey field bla
QC-3
P1-In
P1-In dup
P1-In-3
P1-out
P1-out spike
QC-3
P2-In
P2-out
P3-In
P3-out
Pirkey KCl bla
QC-3

Witnessed & Unc

TITLE 12/17 Continued Book No. 32309 27

From Page No.

Samples continued

name	mL	DF	pk ht	(corr Avg)	ug/L
P3-out	10	5	0.0083; 0.0075; 0.0073	(0.0041)	0.364
Pirkey KCl	—	—			
reagent blank	10	5	0.0022; 0.0020; 0.0020	(0.0005)	0.024
QC	—	—	0.0493; 0.0514; 0.0513	(0.0491)	2.933 (99.782)

P3-out bottle weight: 893.70

Std	pk ht	pk ht	ave pk ht	Corrected pk ht	conc (ug/L)	% recovery
Blank	0.0020	0.0018	0.0019	0	0	
S1	0.0030	0.0029	0.00295	0.00105	0.06	
S2	0.0059	0.0058	0.00585	0.00395	0.25	
S3	0.0181	0.0182	0.01815	0.01625	1	
S4	0.0509	0.0509	0.0509	0.049	3	
S5	0.0841	0.0858	0.08495	0.08305	5	
S6	0.1184	0.1174	0.1179	0.116	7	
QC-3	0.0515	0.0521	0.0518	0.0499	3	
					QC meas. [Hg]	
				QC-3	3.0189716	100.63

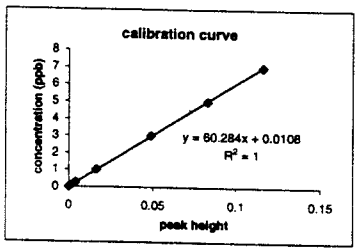

SAMPLE ID	pk ht	pk ht	ave pk ht	Corrected pk ht	DF	ug/L in sample	Comment		Total sample vol.(mL)	ug Hg/sample
S1-in	0.0189	0.0189	0.0189	0.0170	5	5.178			610.7	3.162
S1-in dup	0.0189	0.0188	0.0189	0.0170	5	5.163	%RPD=	0.29	610.7	3.153
S1-out	0.003	0.0028	0.0029	0.0010	5	0.355			713.5	0.254
S2-in	0.0305	0.0305	0.0305	0.0286	5	8.675			606.87	5.264
QC-3	0.0519	0.0519	0.0519	0.0500	-	3.025	% recov=	100.83	-	-
S2-in spike	0.0476	0.0476	0.0476	0.0457	5	13.829	% recov=	104.17	606.87	8.392
S2-out	0.0033	0.0033	0.0033	0.0014	5	0.476			693.23	0.330
S3-in	0.0325	0.032	0.0323	0.0304	5	9.202			631.63	5.812
S3-out	0.0033	0.0035	0.0034	0.0015	5	0.506			757.74	0.384
pirkey field blank	0.0032	0.0032	0.0032	0.0013	5	0.446			451.1	0.201
QC-3	0.0521	0.0522	0.0522	0.05025	-	3.040	% recov=	101.34	-	-
P1-in	0.1023	0.1015	0.1019	0.1000	5	30.196			573.0	17.302
P1-in dup	0.1014	0.1017	0.1016	0.0997	5	30.091	%RPD=	0.35	573.0	17.242
P1-in-3	0.0046	0.0044	0.0045	0.0026	5	0.838			159.4	0.134
P1-out	0.0059	0.0059	0.0059	0.0040	5	1.260			682.8	0.860
P1-out spike	0.0224	0.0225	0.0225	0.0206	5	6.248	% recov=	100.85	682.8	4.266
QC-3	0.0515	0.0521	0.0518	0.0499	-	3.019	% recov=	100.63	-	-
P2-in	0.0647	0.0652	0.0650	0.0631	5	19.059			794.3	15.138
P2-out	0.0049	0.005	0.0050	0.00305	5	0.973			735.3	0.716
P3-in	0.0897	0.0897	0.0897	0.0878	5	26.519			565.5	14.996
P3-out	0.0075	0.0073	0.0074	0.0055	5	1.712			893.7	1.530
Pirkey KCl blank	0.002	0.002	0.0020	0.0001	5	0.084			-	#VALUE!
QC-3	0.0514	0.0513	0.0514	0.0495	-	2.992	% recov=	99.73	-	

To Page No.

Witnessed & Understood by me,	Date	Invented by	Date
	12/17	Recorded by Mendi	

Std	pk ht	pk ht	ave pk h	Corrected pk	conc (ug/	% recovery
Blank	0.0020	0.0018	0.0019	0	0	
S1	0.0030	0.0029	0.00295	0.00105	0.06	
S2	0.0059	0.0058	0.00585	0.00395	0.25	
S3	0.0181	0.0182	0.01815	0.01625	1	
S4	0.0509	0.0509	0.0509	0.049	3	
S5	0.0841	0.0858	0.08495	0.08305	5	
S6	0.1184	0.1174	0.1179	0.116	7	
QC-3	0.0515	0.0521	0.0518	0.0499	3	

	QC meas. [Hg]	
QC-3	3.0190	100.63

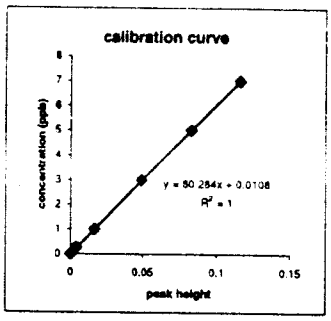

[redacted]

SAMPLE ID	pk ht	pk ht	ave pk h	Corrected pk	DF	ug/L in samp	Comment		Total sample vol.(m	ug Hg/sample
S1-In	0.0189	0.0189	0.0189	0.0170	5	5.178			610.7	3.162
S1-In dup	0.0189	0.0188	0.0189	0.0170	5	5.163	%RPD=	0.29	610.7	3.153
S1-out	0.003	0.0028	0.0029	0.0010	5	0.355			713.5	0.254
S2-In	0.0305	0.0305	0.0305	0.0286	5	8.675			606.87	5.264
QC-3	0.0519	0.0519	0.0519	0.0500	-	3.025	% recov=	100.83	-	-
S2-In spike	0.0476	0.0476	0.0476	0.0457	5	13.829	% recov=	104.17	606.87	8.392
S2-out	0.0033	0.0033	0.0033	0.0014	5	0.476			693.23	0.330
S3-In	0.0325	0.032	0.0323	0.0304	5	9.202			631.63	5.812
S3-out	0.0033	0.0035	0.0034	0.0015	5	0.506			757.74	0.384
pirkey field bla	0.0032	0.0032	0.0032	0.0013	5	0.446			451.1	0.201
QC-3	0.0521	0.0522	0.0522	0.05025	-	3.040	% recov=	101.34	-	-
P1-In	0.1023	0.1015	0.1019	0.1000	5	30.196			573.0	17.302
P1-In dup	0.1014	0.1017	0.1016	0.0997	5	30.091	%RPD=	0.35	573.0	17.242
P1-In-3	0.0046	0.0044	0.0045	0.0026	5	0.838			159.4	0.134
P1-out	0.0059	0.0059	0.0059	0.0040	5	1.260			682.8	0.860
P1-out spike	0.0224	0.0225	0.0225	0.0206	5	6.248	% recov=	100.85	682.8	4.266
QC-3	0.0515	0.0521	0.0518	0.0499	-	3.019	% recov=	100.63	-	-
P2-In	0.0647	0.0652	0.0650	0.0631	5	19.059			794.3	15.138
P2-out	0.0049	0.005	0.0050	0.00305	5	0.973			735.3	0.716
P3-In	0.0897	0.0897	0.0897	0.0878	5	26.519			565.5	14.996
P3-out	0.0075	0.0073	0.0074	0.0055	5	1.712			893.7	1.530
Pirkey KCl bla	0.002	0.002	0.0020	0.0001	5	0.084			-	-
QC-3	0.0514	0.0513	0.0514	0.0495	-	2.992	% recov=	99.73	-	

S= Seymour
P= Pirkey

CeS.

Std	pk ht	pk ht	ave pk ht	Corrected pk	conc (ug/	% recovery
Blank	0.0009	0.0009	0.0009	0	0	
S1	0.0019	0.002	0.00195	0.00105	0.06	
S2	0.0049	0.005	0.00495	0.00405	0.25	
S3	0.0168	0.0168	0.0168	0.0159	1	
S4	0.0491	0.0486	0.04885	0.04795	3	
S5	0.0804	0.0804	0.0804	0.0795	5	
S6	0.1129	0.1132	0.11305	0.11215	7	
QC-3	0.0499	0.0505	0.0502	0.0493	3	

	QC meas. (Hg)	
QC-3	3.0853	102.84

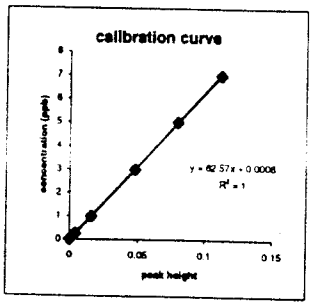

SAMPLE ID	pk ht	pk ht	ave pk ht	Corrected pk	DF	ug/L in sam	Comment		Total sample vol.(r	ug Hg/sample
S1-In	0.0532	0.0533	0.05325	0.05235	5	16.381			568.37	9.310
S1-In dup	0.0512	0.0498	0.0505	0.0496	5	15.520	%RPD=	5.39	568.37	8.821
S1-out	0.0798	0.0785	0.07915	0.0783	5	24.484			548.46	13.428
S2-In	0.0972	0.0977	0.09745	0.0966	5	30.209			547.51	16.540
QC-3	0.0503	0.0503	0.0503	0.0494	-	3.092	% recov=	103.05	-	-
S2-In spike	0.1102	0.1115	0.1109	0.1100	5	34.401	% recov=	83.90	547.51	18.835
S2-out	0.0839	0.0843	0.0841	0.0832	5	26.032			577.56	15.035
S3-In	0.0583	0.0583	0.0583	0.0574	5	17.961			701.51	12.600
S3-out	0.0597	0.0605	0.0601	0.0592	5	18.524			704.54	13.051
P1-In	0.2201	0.2223	0.2212	0.2203	5	68.924			627.4	43.243
QC-3	0.0502	0.0513	0.0508	0.04985	-	3.120	% recov=	103.99	-	-
P1-In dup	0.2193	0.2197	0.2195	0.2186	5	68.392	%RPD=	1.48	627.4	42.909
P1-out	0.1603	0.1597	0.1600	0.1591	5	49.777			550.4	27.398
P2-In	0.1422	0.1422	0.1422	0.1413	5	44.209			549.5	24.293
P2-out	0.1168	0.1169	0.1169	0.11595	5	36.278			703.0	25.503
P3-In	0.1437	0.1419	0.1428	0.1419	5	44.396			560.3	24.875
QC-3	0.0507	0.0509	0.0508	0.0499	-	3.123	% recov=	104.09	-	
P3-out	0.0685	0.0678	0.0682	0.0673	5	21.042			850.2	17.890
QC-3	0.0509	0.0509	0.0509	0.0500	-	3.129	% recov=	104.30	-	

S = Seymour
P = Pirkey

Method 5 Filter Weight Gain Data

RADIAN INTERNATIONAL
A DAMES & MOORE GROUP COMPANY

Mailing Address:
Post Office Box 201088
Austin, Texas 78720-1088

Physical/Shipping Address:
8501 North Mopac Boulevard
Austin, Texas 78759

512 454 4797 Tel
512 454 7129 Fax

Project: **EPRI Seymour Station**
A. O'Brien

Test: **Method 5--Determination of Particulate Emissions from Stationary Sources**

Date Received: **December 1998**
Date Completed: **December 1998**

Contents:

Filter Weight Gain .....
PNR Weight Gain.....
Support Data.....

Filter Weight Gain

Sample ID Number		Weight Gain (g)
IN-1	5780	0.0091
IN-2	5784	0.0091
IN-3	5788	0.0077
OUT-1	5782	0.0039
OUT-2	5786	-0.0030
OUT-3	5790	0.0024
FB	5792	0.0025

Support Data

Contents

Filter Weight Gain Raw Data
Filter Tare Weights
PNR Raw Data
Beaker Tare Weights
Miscellaneous Support Data

Filter Weight Gain

Sample ID No.	Filter No.	Tare Weight	Final Weight	Net Gain	Comments
IN-1	5780	0.3581	0.3673	0.0091	
IN-2	5784	0.3528	0.3620	0.0091	
IN-3	5788	0.3535	0.3613	0.0077	
OUT-1	5782	0.3494	0.3533	0.0039	
OUT-2	5786	0.3607	0.3577	-0.0030	Incomplet filter
OUT-3	5790	0.3586	0.3610	0.0024	
FB	5792	0.3513	0.3538	0.0025	

Tare Weights
Quartz Ultra Pure

Sample ID	Filter No.	Date	Time	1st Weight	Date	Time	2nd Weight	Comments
IN-1	6354	6/1/98	10:15	0.3565	6/2/98	10:45	0.3565	
IN-2	5794	6/1/98	10:15	0.3584	6/2/98	10:45	0.3584	
IN-3	5798	6/1/98	10:15	0.359	6/2/98	10:45	0.3591	
OUT-1	6356	6/1/98	10:15	0.3564	6/2/98	10:45	0.3564	
OUT-2	5796	6/1/98	10:15	0.3609	6/2/98	10:45	0.3609	
OUT-3	5770	6/1/98	10:15	0.3647	6/2/98	10:45	0.3647	
FB	5772	6/1/98	10:15	0.3527	6/2/98	10:45	0.3526	
IN-1	5780	6/1/98	10:15	0.3581	6/2/98	10:45	0.3581	
IN-2	5784	6/1/98	10:15	0.3528	6/2/98	10:45	0.3528	
IN-3	5788	6/1/98	10:15	0.3535	6/2/98	10:45	0.3535	
OUT-1	5782	6/1/98	10:15	0.3493	6/2/98	10:45	0.3494	
OUT-2	5786	6/1/98	10:15	0.3607	6/2/98	10:45	0.3607	
OUT-3	5790	6/1/98	10:15	0.3586	6/2/98	10:45	0.3586	
FB	5792	6/1/98	10:15	0.3513	6/2/98	10:45	0.3512	

FINAL WEIGHTS

Filter No.	Date	Time	1st Weight	Date	Time	2nd Weig
6354	12/16/98	07:30 PM	0.4146	12/17/98	10:15 AM	0.41
5794	12/16/98	07:30 PM	0.4175	12/17/98	10:15 AM	0.41
5798	12/16/98	07:30 PM	0.4098	12/17/98	10:15 AM	0.409
6356	12/16/98	07:30 PM	0.3718	12/17/98	10:15 AM	0.3
5796	12/16/98	07:30 PM	0.3752	12/17/98	10:15 AM	0.375
5770	12/16/98	07:30 PM	0.3788	12/17/98	10:15 AM	0.378
5772	12/16/98	07:30 PM	0.355	12/17/98	10:15 AM	0.354
5780	12/16/98	07:30 PM	0.3671	12/17/98	10:15 AM	0.367
5784	12/16/98	07:30 PM	0.362	12/17/98	10:15 AM	0.361
5788	12/16/98	07:30 PM	0.3611	12/17/98	10:15 AM	0.361
5782	12/16/98	07:30 PM	0.3533	12/17/98	10:15 AM	0.353
5786	12/16/98	07:30 PM	0.3577	12/17/98	10:15 AM	0.357
5790	12/16/98	07:30 PM	0.3608	12/17/98	10:15 AM	0.361
5792	12/16/98	07:30 PM	0.3539	12/17/98	10:15 AM	0.353

Coal Ultimate and Proximate Analysis Results

Submitted by Commercial Testing and Engineering

COMMERCIAL TESTING & ENGINEERING CO.
GENERAL OFFICES: 1919 SOUTH HIGHLAND AVE., SUITE 210-B, LOMBARD, ILLINOIS 60148 • TEL: 630-953-8300 FAX: 630-953-8306
SINCE 1908™
SGS Member of the SGS Group (Société Générale de Surveillance)

PLEASE ADDRESS ALL CORRESPONDENCE TO.
4665 PARIS STREET
SUITE B-200
DENVER, CO 80239
TEL: (303) 373-4772
FAX: (303) 373-4791

February 16, 1999

RADIAN CORPORATION
P.O. Box 201088
Austin TX 78720

Sample identification by
RADIAN CORPORATION

SAMPLE ID: SEYMOUR-COAL-1

Kind of sample COAL

Sample taken by RADIAN CORPORATION

Date sampled December 16, 1998

Date received February 12, 1999

Analysis report no. 72-400389

PROXIMATE ANALYSIS

	As Received	Dry Basis
% Moisture	23.42	xxxxxx
% Ash	5.55	7.25
% Volatile	34.32	44.82
% Fixed Carbon	36.71	47.93
	100.00	100.00
Btu/lb	9016	11773
% Sulfur	0.41	0.54
MAF Btu/lb		12693
% MAF Volatile		48.32
% MAF Fixed Carbon		51.68
lb SO_2/mm Btu		0.91

ULTIMATE ANALYSIS

	As Received	Dry Basis
% Moisture	23.42	xxxxx
% Carbon	52.96	69.15
% Hydrogen	3.72	4.86
% Nitrogen	1.44	1.88
% Sulfur	0.41	0.54
% Ash	5.55	7.25
% Oxygen (diff)	12.50	16.32
	100.00	100.00
lb Sulfur/mm Btu		0.45

Respectfully submitted,
COMMERCIAL TESTING & ENGINEERING CO.

Byron C. Cat

Denver Laboratory

MEMBER ACII

OVER 40 BRANCH LABORATORIES STRATEGICALLY LOCATED IN PRINCIPAL COAL MINING AREAS, TIDEWATER AND GREAT LAKES PORTS, AND RIVER LOADING FACILITIES
F-465
Original Watermarked For Your Protection
TERMS AND CONDITIONS ON REVERSE

COMMERCIAL TESTING & ENGINEERING CO.
GENERAL OFFICES: 1919 SOUTH HIGHLAND AVE., SUITE 210-B, LOMBARD, ILLINOIS 60148 • TEL: 630-953-9300 FAX: 630-953-8300
SINCE 1908®
SGS Member of the SGS Group (Société Générale de Surveillance)
PLEASE ADDRESS ALL CORRESPONDENCE TO:
4665 PARIS STREET
SUITE B-200
DENVER, CO 80239
TEL: (303) 373-4772
FAX: (303) 373-4781

February 16, 1999

RADIAN CORPORATION
P.O. Box 201088
Austin TX 78720

Sample identification by
RADIAN CORPORATION

SAMPLE ID: SEYMOUR-COAL-2

Kind of sample COAL

Sample taken by RADIAN CORPORATION

Date sampled December 16, 1998

Date received February 12, 1999

Analysis report no. 72-400390

PROXIMATE ANALYSIS

	As Received	Dry Basis
% Moisture	23.48	xxxxxx
% Ash	5.29	6.91
% Volatile	34.48	45.06
% Fixed Carbon	36.75	48.03
	100.00	100.00
Btu/lb	9104	11898
% Sulfur	0.36	0.47
MAF Btu/lb		12781
% MAF Volatile		48.40
% MAF Fixed Carbon		51.60
lb SO_2/mm Btu		0.79

ULTIMATE ANALYSIS

	As Received	Dry Basis
% Moisture	23.48	xxxxx
% Carbon	53.30	69.66
% Hydrogen	3.70	4.83
% Nitrogen	1.45	1.90
% Sulfur	0.36	0.47
% Ash	5.29	6.91
% Oxygen (diff)	12.42	16.23
	100.00	100.00
lb Sulfur/mm Btu		0.40

Respectfully submitted,
COMMERCIAL TESTING & ENGINEERING CO.

Byron C. Cat

Denver Laboratory

MEMBER ACIL

OVER 40 BRANCH LABORATORIES STRATEGICALLY LOCATED IN PRINCIPAL COAL MINING AREAS, TIDEWATER AND GREAT LAKES PORTS, AND RIVER LOADING FACILITIES
F-486
Original Watermarked For Your Protection
TERMS AND CONDITIONS ON REVERSE

COMMERCIAL TESTING & ENGINEERING CO.
GENERAL OFFICES: 1919 SOUTH HIGHLAND AVE., SUITE 210-B, LOMBARD, ILLINOIS 60148 • TEL: 630-663-8300 FAX: 630-663-8306
SINCE 1908
SGS Member of the SGS Group (Société Générale de Surveillance)

PLEASE ADDRESS ALL CORRESPONDENCE TO:
4665 PARIS STREET
SUITE B-200
DENVER, CO 80239
TEL: (303) 373-4772
FAX: (303) 373-4781

February 24, 1999

RADIAN CORPORATION
P.O. Box 201088
Austin TX 78720

Sample identification by
RADIAN CORPORATION

SAMPLE ID: SEYMOUR-COAL-3

Kind of sample COAL

Sample taken by RADIAN CORPORATION

Date sampled December 16, 1998

Date received February 12, 1999

Analysis report no. 72-400391

PROXIMATE ANALYSIS

	As Received	Dry Basis
% Moisture	22.73	xxxxxx
% Ash	6.07	7.86
% Volatile	35.04	45.35
% Fixed Carbon	36.16	46.79
	100.00	100.00
Btu/lb	9245	11964
% Sulfur	0.36	0.47
MAF Btu/lb		12985
% MAF Volatile		49.22
% MAF Fixed Carbon		50.78
lb SO_2/mm Btu		0.78

ULTIMATE ANALYSIS

	As Received	Dry Basis
% Moisture	22.73	xxxxx
% Carbon	53.82	69.65
% Hydrogen	3.42	4.42
% Nitrogen	0.77	1.00
% Sulfur	0.36	0.47
% Ash	6.07	7.86
% Oxygen (diff)	12.83	16.60
	100.00	100.00
lb Sulfur/mm Btu		0.39

Respectfully submitted,
COMMERCIAL TESTING & ENGINEERING CO.

Byron C. Cat

Denver Laboratory

MEMBER ACII

OVER 40 BRANCH LABORATORIES STRATEGICALLY LOCATED IN PRINCIPAL COAL MINING AREAS, TIDEWATER AND GREAT LAKES PORTS, AND RIVER LOADING FACILITIES

TERMS AND CONDITIONS ON REVERSE