Table 9-17

Continued

Compound	Cases	Freq* (%)	ppbC						
			Min*	Max*	Med*	Avg*	Std Dev*	S*	K*
2-Methylpentane	621	99.5	0.7	83.2	4.8	6.8	7.3	4.7	34.8
3-Methylpentane	613	98.2	0.6	59.5	3.8	5.3	4.9	3.9	29.5
2-Methyl-1-pentene	126	20.2	0.4	2.9	0.8	1.0	0.6	1.3	1.4
1-Hexene	228	36.5	0.4	6.4	1.0	1.2	0.8	3.0	13.4
2-Ethyl-1-butene	13	2.1	0.4	1.4	0.7	0.8	0.3	0.7	-0.5
n-Hexane	615	98.6	0.5	78.3	3.4	5.3	6.0	4.9	43.1
t-2-Hexene	199	31.9	0.4	4.4	0.7	0.9	0.5	4.0	21.7
c-2-Hexene	118	18.9	0.4	2.4	0.6	0.7	0.3	2.9	12.7
Methylcyclopentane	593	95.0	0.4	35.0	2.0	3.1	3.1	3.9	26.0
2,4-Dimethylpentane	481	77.1	0.4	10.1	1.2	1.7	1.3	2.3	8.2
Benzene	622	99.7	0.7	46.4	5.1	7.0	5.9	2.3	8.1
Cyclohexane	460	73.7	0.4	24.3	1.8	2.7	2.9	3.2	14.2
2,3-Dimethylpentane	311	49.8	0.4	10.3	1.5	2.0	1.7	2.1	5.7
2-Methylhexane	549	88.0	0.4	17.7	1.6	2.2	2.0	3.0	13.5
3-Methylhexane	618	99.0	0.6	16.6	2.5	3.1	2.1	2.1	6.4
2,2,4-Trimethylpentane	613	98.2	0.5	49.5	3.5	4.8	4.3	3.3	22.2
n-Heptane	543	87.0	0.4	30.5	1.7	2.4	2.3	4.9	44.5
Methylcyclohexane	482	77.2	0.4	92.2	1.4	2.1	4.5	17.6	352.3
1-Heptene	3	0.5	0.8	1.1	0.9	0.9	0.2	0.7	.
2,2,3-Trimethylpentane	369	59.1	0.4	4.8	0.9	1.1	0.6	2.3	7.2
2,3,4-Trimethylpentane	554	88.8	0.4	11.7	1.4	1.8	1.5	2.4	8.4
Toluene	623	99.8	1.1	325.0	12.4	18.3	21.8	6.7	74.1
2-Methylheptane	447	71.6	0.4	5.6	1.1	1.4	0.9	1.7	3.1
3-Methylheptane	391	62.7	0.4	14.1	1.0	1.4	1.3	5.2	38.4
1-Octene	258	41.4	0.4	5.3	0.9	1.1	0.8	2.8	10.0
n-Octane	424	68.0	0.4	8.5	1.0	1.3	1.0	3.3	14.9
Ethylbenzene	605	97.0	0.5	47.4	2.2	3.4	3.7	5.7	56.2

Table 9-17

Continued

Compound	Cases	Freq[a] (%)	ppbC						
			Min[a]	Max[a]	Med[a]	Avg[a]	Std Dev[a]	S[a]	K[a]
p-Xylene + m-Xylene	622	99.7	0.5	134.2	6.4	9.6	10.6	5.7	57.4
Styrene	457	73.2	0.4	21.6	0.9	1.3	1.6	7.3	74.8
o-Xylene	606	97.1	0.5	45.5	2.4	3.6	3.5	4.5	38.9
1-Nonene	92	14.7	0.4	6.1	0.7	1.0	0.9	3.6	14.9
n-Nonane	407	65.2	0.4	14.9	1.1	1.5	1.5	5.0	34.7
Isopropylbenzene	175	28.0	0.4	9.7	0.8	1.1	1.2	4.6	24.9
alpha-Pinene	414	66.4	0.5	22.3	1.7	2.7	3.1	3.2	13.5
n-Propylbenzene	394	63.1	0.4	8.1	1.0	1.2	0.8	3.6	21.5
m-Ethyltoluene	611	97.9	0.5	18.5	2.3	3.0	2.2	1.9	5.5
p-Ethyltoluene	321	51.4	0.4	6.4	1.0	1.2	0.9	2.6	9.2
1,3,5-Trimethylbenzene	498	79.8	0.4	16.0	1.3	1.8	1.8	4.2	24.0
o-Ethyltoluene	292	46.8	0.5	58.6	1.5	2.1	3.9	11.8	160.6
beta-Pinene	332	53.2	0.4	8.4	1.3	1.9	1.5	1.6	2.5
1-Decene	593	95.0	0.4	20.9	1.6	2.6	2.6	2.7	9.5
1,2,4-Trimethylbenzene	597	95.7	0.4	50.5	2.1	3.4	3.9	5.1	44.3
n-Decane	449	72.0	0.4	80.9	1.3	2.5	5.8	8.9	97.7
1,2,3-Trimethylbenzene	606	97.1	0.5	16.4	2.5	2.9	2.0	2.3	9.3
p-Diethylbenzene	242	38.8	0.4	29.6	0.8	1.2	2.0	12.6	179.9
1-Undecene	471	75.5	0.4	16.4	1.2	1.4	1.2	5.9	53.9
n-Undecane	590	94.6	0.4	536.1	1.6	3.4	22.2	23.7	570.8
1-Dodecene	542	86.9	0.4	8.0	0.9	1.1	0.7	3.4	20.3
n-Dodecane	594	95.2	0.4	471.4	1.5	3.4	19.7	22.6	535.6
1-Tridecene	172	27.6	0.4	3.1	0.6	0.8	0.4	2.3	7.2
n-Tridecane	543	87.0	0.4	59.4	0.9	1.4	2.8	16.7	334.0

[a]Freq = Frequency; Min = Minimum; Max = Maximum; Med = Median; Avg = Average; Std Dev = Standard Deviation; S = Skewness; K = Kurtosis
[b]Calculation not possible due to limited data.

Table 9-18

1993 Summary Statistics for the Option Sites

Compound	Cases	Freq[a] (%)	ppbC						
			Min[a]	Max[a]	Med[a]	Avg[a]	Std Dev[a]	S[a]	K[a]
Ethylene	41	100.0	4.2	84.8	11.7	17.6	17.8	2.5	6.5
Acetylene	41	100.0	1.3	108.2	4.9	9.7	17.6	4.8	25.8
Ethane	41	100.0	3.5	92.3	9.7	16.4	19.8	2.9	8.1
Propyne	1	2.4	0.7	0.7	0.7	0.7	.[b]	.	.
Isobutane	41	100.0	1.4	24.5	5.1	6.9	5.5	1.9	3.6
1-Butene	41	100.0	0.7	11.6	2.2	3.1	2.4	2.0	4.0
Isobutene	0	0.0	.	.	.	.	.	.	.
Propylene	41	100.0	1.3	31.7	4.1	6.6	6.0	2.5	7.5
1,3-Butadiene	17	41.5	0.5	2.2	0.8	1.0	0.5	1.4	1.4
n-Butane	41	100.0	1.8	39.2	9.7	11.7	8.9	1.8	3.0
Propane	41	100.0	2.2	85.6	12.9	20.6	19.4	1.7	2.5
t-2-Butene	29	70.7	0.4	5.7	1.2	1.7	1.3	1.9	3.5
c-2-Butene	26	63.4	0.5	5.9	1.1	1.4	1.2	2.6	8.1
3-Methyl-1-butene	23	56.1	0.4	2.2	0.8	1.0	0.6	0.9	-0.6
Isopentane	41	100.0	4.6	102.4	16.0	22.2	19.4	2.5	7.2
1-Pentene	28	68.3	0.5	6.7	1.0	1.4	1.3	3.2	10.8
2-Methyl-1-butene	33	80.5	0.4	9.2	1.3	1.7	1.7	3.2	13.0
n-Pentane	41	100.0	1.2	46.4	5.7	8.4	8.0	3.1	12.2
Isoprene	38	92.7	0.4	7.3	1.7	2.5	1.7	1.0	0.2
t-2-Pentene	32	78.1	0.4	11.3	1.2	2.1	2.5	2.8	7.8
c-2-Pentene	26	63.4	0.5	7.0	1.0	1.5	1.4	2.7	9.3
2-Methyl-2-butene	36	87.8	0.4	13.6	1.3	2.0	2.4	3.7	16.3
2,2-Dimethylbutane	22	53.7	0.4	20.1	0.7	3.1	6.1	2.3	3.8
Cyclopentene	7	17.1	0.4	2.6	0.8	1.0	0.8	2.1	4.7
4-Methyl-1-pentene	33	80.5	0.4	3.1	0.8	0.9	0.5	3.0	12.4
Cyclopentane	31	75.6	0.4	6.9	0.8	1.3	1.4	3.1	10.1
2,3-Dimethylbutane	40	97.6	0.8	9.2	1.8	2.3	1.6	2.5	8.7

Table 9-18

Continued

Compound	Cases	Freq[a] (%)	ppbC						
			Min[a]	Max[a]	Med[a]	Avg[a]	Std Dev[a]	S[a]	K[a]
2-Methylpentane	41	100.0	0.5	39.1	3.8	6.5	6.8	3.1	12.6
3-Methylpentane	41	100.0	0.6	2532.8	4.9	67.4	394.7	6.4	41.0
2-Methyl-1-pentene	7	17.1	0.7	4.7	0.9	1.7	1.4	2.0	4.1
1-Hexene	19	46.3	0.5	1.9	0.7	0.9	0.4	1.3	0.6
2-Ethyl-1-butene	2	4.9	0.6	0.6	0.6	0.6	0.0	.	.
n-Hexane	41	100.0	0.6	31.2	2.8	4.3	5.3	3.9	17.7
t-2-Hexene	14	34.2	0.4	5.4	0.8	1.1	1.3	3.3	11.6
c-2-Hexene	9	22.0	0.5	2.1	0.6	0.8	0.5	2.6	7.4
Methylcyclopentane	41	100.0	0.4	161.5	1.6	6.5	25.0	6.3	39.9
2,4-Dimethylpentane	37	90.2	0.4	6.2	0.9	1.3	1.1	2.9	10.1
Benzene	41	100.0	2.6	28.9	5.8	7.1	5.0	2.6	8.8
Cyclohexane	39	95.1	0.6	7.2	1.9	2.2	1.5	1.4	2.0
2,3-Dimethylpentane	14	34.2	0.4	2.8	0.9	1.0	0.6	2.5	7.8
2-Methylhexane	40	97.6	0.5	64.4	2.4	5.8	12.6	4.0	16.0
3-Methylhexane	41	100.0	1.1	57.7	3.3	5.9	10.9	4.2	17.6
2,2,4-Trimethylpentane	41	100.0	0.5	23.1	3.0	4.6	4.3	2.6	8.3
n-Heptane	39	95.1	0.4	28.2	1.9	3.3	5.2	4.0	16.7
Methylcyclohexane	37	90.2	0.5	6.6	1.3	1.6	1.4	2.2	5.2
1-Heptene	0	0.0	.	.	.	.	.	.	.
2,2,3-Trimethylpentane	33	80.5	0.4	3.8	0.8	1.0	0.7	2.6	9.2
2,3,4-Trimethylpentane	41	100.0	0.5	9.1	1.3	1.8	1.6	2.7	9.3
Toluene	41	100.0	5.5	123.1	16.4	27.6	27.1	2.4	6.3
2-Methylheptane	38	92.7	0.4	5.5	1.2	1.6	1.2	1.9	3.5
3-Methylheptane	35	85.4	0.4	4.8	0.9	1.3	1.1	2.0	3.7
1-Octene	19	46.3	0.4	1.7	0.7	0.7	0.3	1.9	4.1
n-Octane	28	68.3	0.4	3.9	0.8	1.0	0.7	3.1	11.5
Ethylbenzene	41	100.0	0.8	17.6	2.5	3.6	3.3	2.9	9.7

Table 9-18

Continued

Compound	Cases	Freq[a] (%)	ppbC						
			Min[a]	Max[a]	Med[a]	Avg[a]	Std Dev[a]	S[a]	K[a]
p-Xylene + m-Xylene	41	100.0	0.5	60.4	8.1	12.0	11.8	2.8	9.2
Styrene	34	82.9	0.5	4.6	0.8	1.1	0.9	2.7	7.7
o-Xylene	41	100.0	0.5	22.5	2.8	4.6	4.8	2.6	6.6
1-Nonene	10	24.4	0.5	1.3	0.7	0.8	0.3	0.7	-1.0
n-Nonane	38	92.7	0.4	5.8	1.1	1.4	1.0	2.7	8.9
Isopropylbenzene	21	51.2	0.5	5.9	1.1	1.3	1.2	3.3	13.1
alpha-Pinene	40	97.6	0.5	3.0	1.6	1.6	0.8	0.3	-1.1
n-Propylbenzene	31	75.6	0.5	4.1	0.9	1.2	0.9	2.1	4.9
m-Ethyltoluene	41	100.0	0.9	11.4	2.1	2.9	2.2	2.2	5.9
p-Ethyltoluene	27	65.9	0.4	5.2	0.9	1.3	1.1	2.6	7.3
1,3,5-Trimethylbenzene	39	95.1	0.5	5.3	1.2	1.6	1.1	1.6	2.4
o-Ethyltoluene	39	95.1	0.7	7.1	1.8	2.2	1.4	1.8	3.5
beta-Pinene	22	53.7	0.4	4.6	0.8	1.2	1.0	2.4	7.2
1-Decene	40	97.6	0.6	4.0	1.0	1.2	0.7	2.9	10.1
1,2,4-Trimethylbenzene	41	100.0	0.8	19.6	3.4	4.9	4.2	2.2	5.6
n-Decane	35	85.4	0.4	11.6	1.3	2.3	2.7	2.6	6.4
1,2,3-Trimethylbenzene	41	100.0	1.8	23.9	3.5	4.9	3.7	3.6	16.7
p-Diethylbenzene	30	73.2	0.5	12.3	0.7	1.3	2.2	5.0	26.5
1-Undecene	37	90.2	0.5	13.1	2.0	2.5	2.3	3.3	12.7
n-Undecane	41	100.0	0.6	38.4	1.7	4.4	8.3	3.6	12.8
1-Dodecene	39	95.1	0.6	6.6	1.3	1.5	1.1	3.3	12.0
n-Dodecane	41	100.0	0.5	26.4	1.6	4.1	6.5	2.4	4.7
1-Tridecene	25	61.0	0.4	4.1	0.6	0.8	0.7	3.9	17.5
n-Tridecane	39	95.1	0.5	7.7	1.1	1.7	1.4	2.4	8.0

[a]Freq = Frequency; Min = Minimum; Max = Maximum; Med = Median; Avg = Average; Std Dev = Standard Deviation; S = Skewness; K = Kurtosis
[b]Calculation not possible due to limited data.

sample, labeled unidentified VOC (volatile organic compounds), and a total NMOC value which represents a sum concentration of all target compounds reported plus all unidentified compounds measured.

For the daily monitoring program sites, the results are presented in a weekly report format (Monday to Friday). For days when duplicate samples were taken, the results for one of the duplicate samples was chosen to appear on the weekly report. The duplicate sample date can be used to reference a duplicate or duplicate/replicate report. The duplicate reports appear after the weekly reports for each site, and show a comparison of the results for a duplicate sample pair, or a duplicate pair with replicate analyses when done. For the optional sites, the five column report format is used and the analytical results are presented in chronological order based on the sample collection date.

10.0 SNMOC TECHNICAL NOTES

This section describes the sampling and analytical equipment and procedures used for the 1993 SNMOC monitoring program. The sample collection method follows the general guidelines of EPA's Compendium of Methods TO-12.[1] The analysis method follows the general guidelines of EPA's "Research Protocol Method for Analysis of C_2 through C_{12} Hydrocarbons in Ambient Air by Gas Chromatography with Cryogenic Concentration" given in Appendix J.

10.1 Sampling Equipment and Procedure

The 1993 SNMOC monitoring program began 7 June 1993, and ended 30 September 1993. Integrated ambient air samples for program sites were collected from 6:00 a.m. to 9:00 a.m., local time, Monday through Friday. The sampling equipment and sampling procedures used to collect these samples were the same as those used for the NMOC monitoring program described previously in Section 3.1.

10.2 Analytical System

Two analytical systems were used for the 1993 SNMOC analyses. One system uses a manual sampling interface, the other an automated sampling interface, to concentrate and transfer sample aliquots from stainless steel canisters to the GC.

The GCs connected to these sample introduction systems each contained two fused-silica capillary columns each connected to a FID. The sample is split between the columns in a 1:1 ratio with a 3-way press tight glass union. Each column has a J&W DB-1® phase. One column has a phase thickness of 1 μm to separate C_4 through C_{13} hydrocarbons effectively. The other has a phase thickness of 5 μm to separate C_2 and C_3 hydrocarbons consistently.

Each system was characterized by analyzing hydrocarbon standards and operating conditions determined so the chromatography would be comparable between systems. Each GC oven temperature is programmed so the sample is refocused on the GC column at subambient conditions, then the temperature increases to chromatographically separate the target compounds. Table 10-1 gives the operating conditions for these analytical systems.

10.2.1 Manual Interface System

This analytical system consists of a manual sampling interface, a Varian® 3400 dual FID GC, and a Nelson® 2600 data acquisition system. Figure 10-1 presents the schematic of this analytical system.

Figures 10-2 and 10-3 show the sample flow paths determined by valve position in the manual sampling interface system during the sample loading and sample injecting mode, respectively. When the 6-port valve is in the sample load mode (see Figure 10-2), the sample interface cryogenically concentrates a measured aliquot of sample. In the sample inject mode (see Figure 10-3), the cryogenically focused sample aliquot is thermally desorbed and the sample is swept by helium carrier gas to the head of the GC column.

10.2.2 Automated Sampling Interface System

This analytical system consists of an automated sampling interface, a Varian® 3600 dual FID GC, and a Nelson® 2600 data acquisition system. Figure 10-4 shows a flowchart outlining the general procedure used to concentrate and analyze a sample on this system. Details of the GC system and data system are the same as those in Figure 10-1, except the GC used is a Varian® 3600.

Table 10-1

1993 SNMOC GC/FID Operating Conditions

Parameter	Operating Value	
	Manual Interface System	Automated Interface System
Sample Volume	~ 800 mL	~ 800 mL
J&W DB-1® Capillary Columns		
Column A:		
Film Thickness	1 μm	1 μm
Length	60 m	60 m
Inside Diameter	0.32 mm	0.32 mm
Column B:		
Film Thickness	5 μm	5 μm
Length	60 m	60 m
Inside Diameter	0.32 mm	0.32 mm
Oven Temperature Program	-60° for 5 min. Then: 6°C/min. to 150°C, then 20°C/min. to 180°C. and hold for 4 min.	-60° for 5 min. Then: 6°C/min. to 150°C, then 20°C/min. to 180°C. and hold for 7 min.
Analysis Time	45 min.	50 min.
Detector Temperatures		
2 FIDs	300°C	300°C
Gas Flow Rates		
Helium Carrier Gas	4 mL/min.	2 mL/min.
Helium Make-Up	30 mL/min.	30 mL/min.
H_2 to FID	30 mL/min.	30 mL/min.
Air to FID	300 mL/min.	300 mL/min.

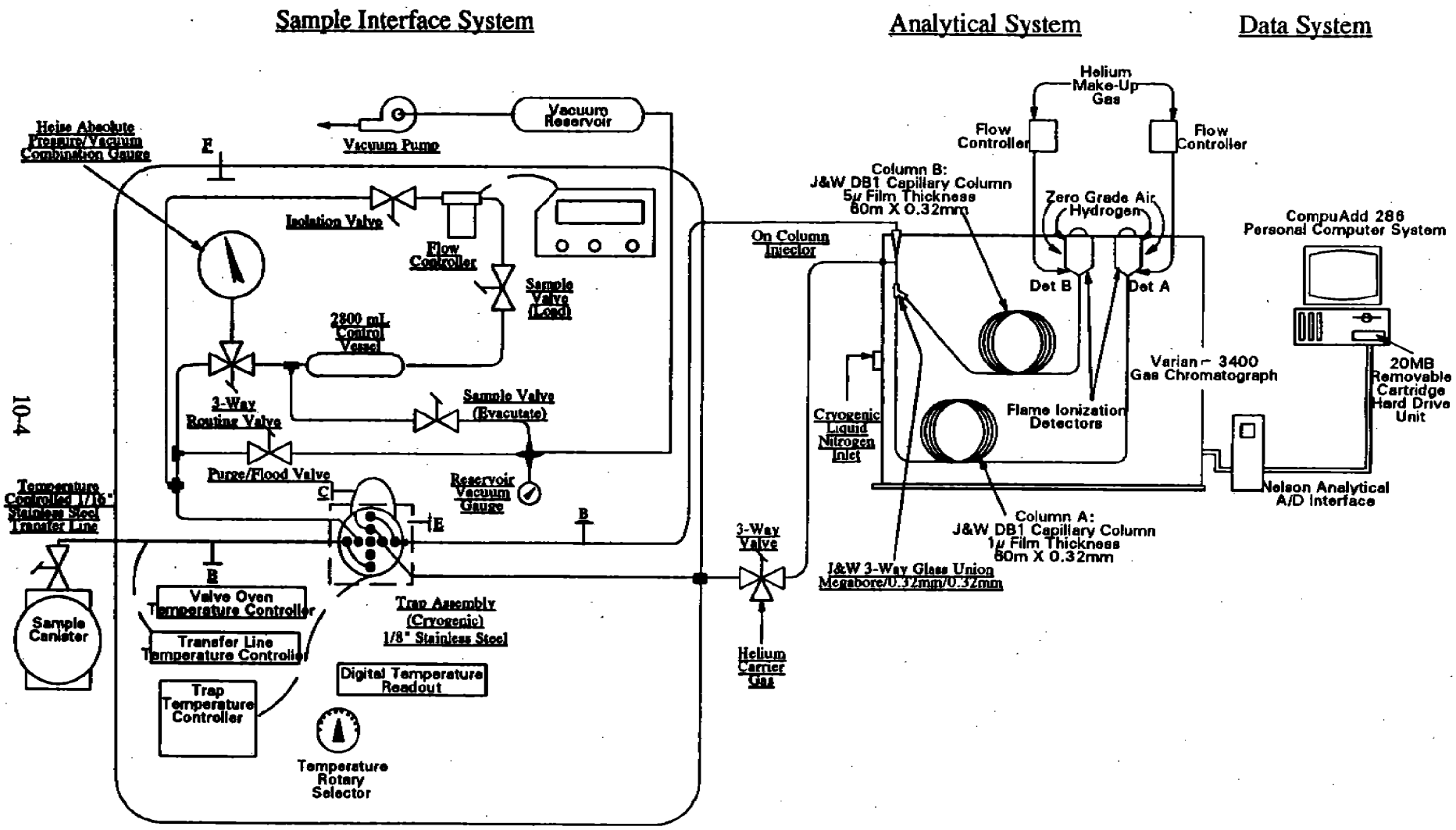

Figure 10-1. Hydrocarbon Analysis System

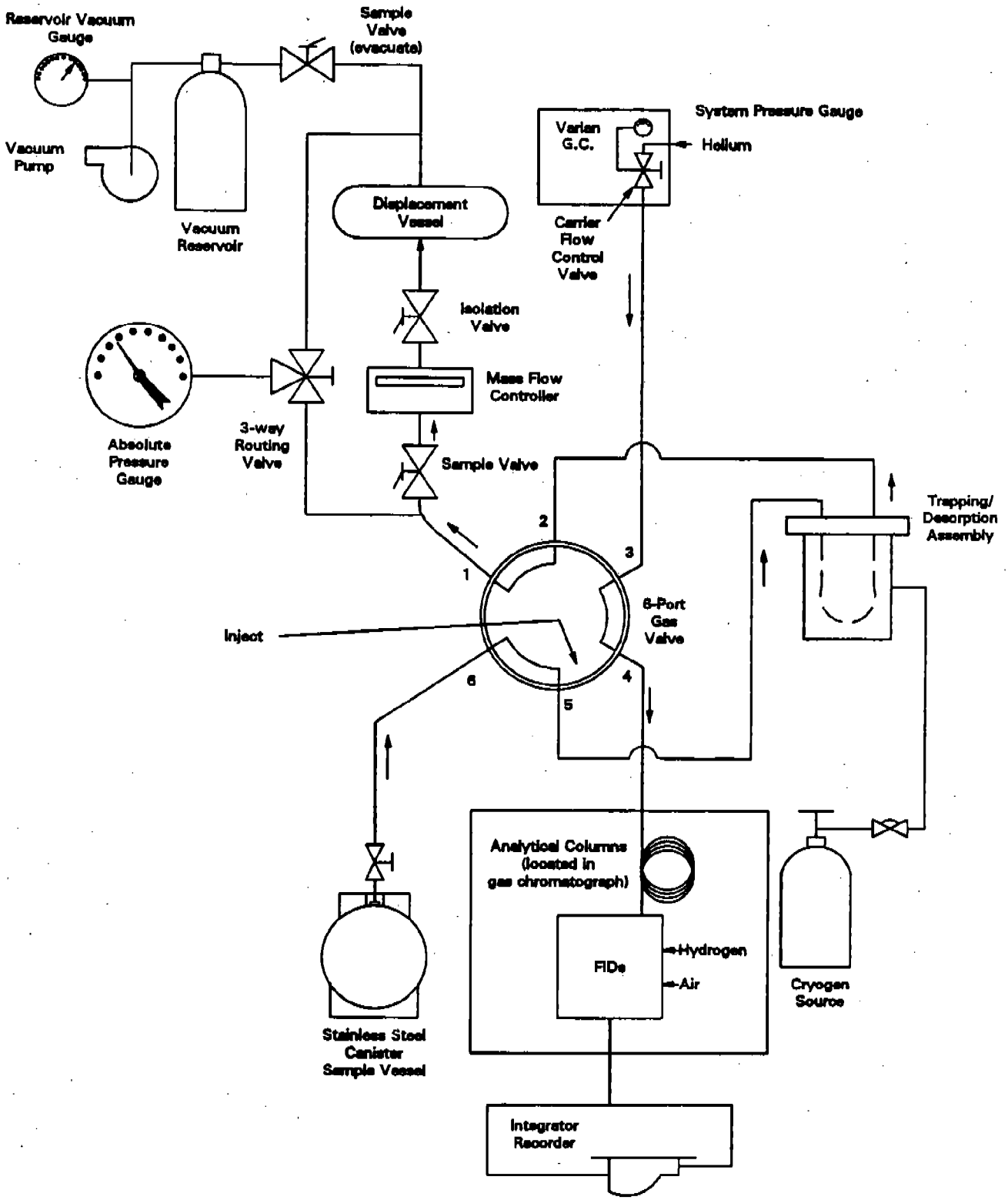

Figure 10-2. Radian Sample Interface in Sample Load Mode

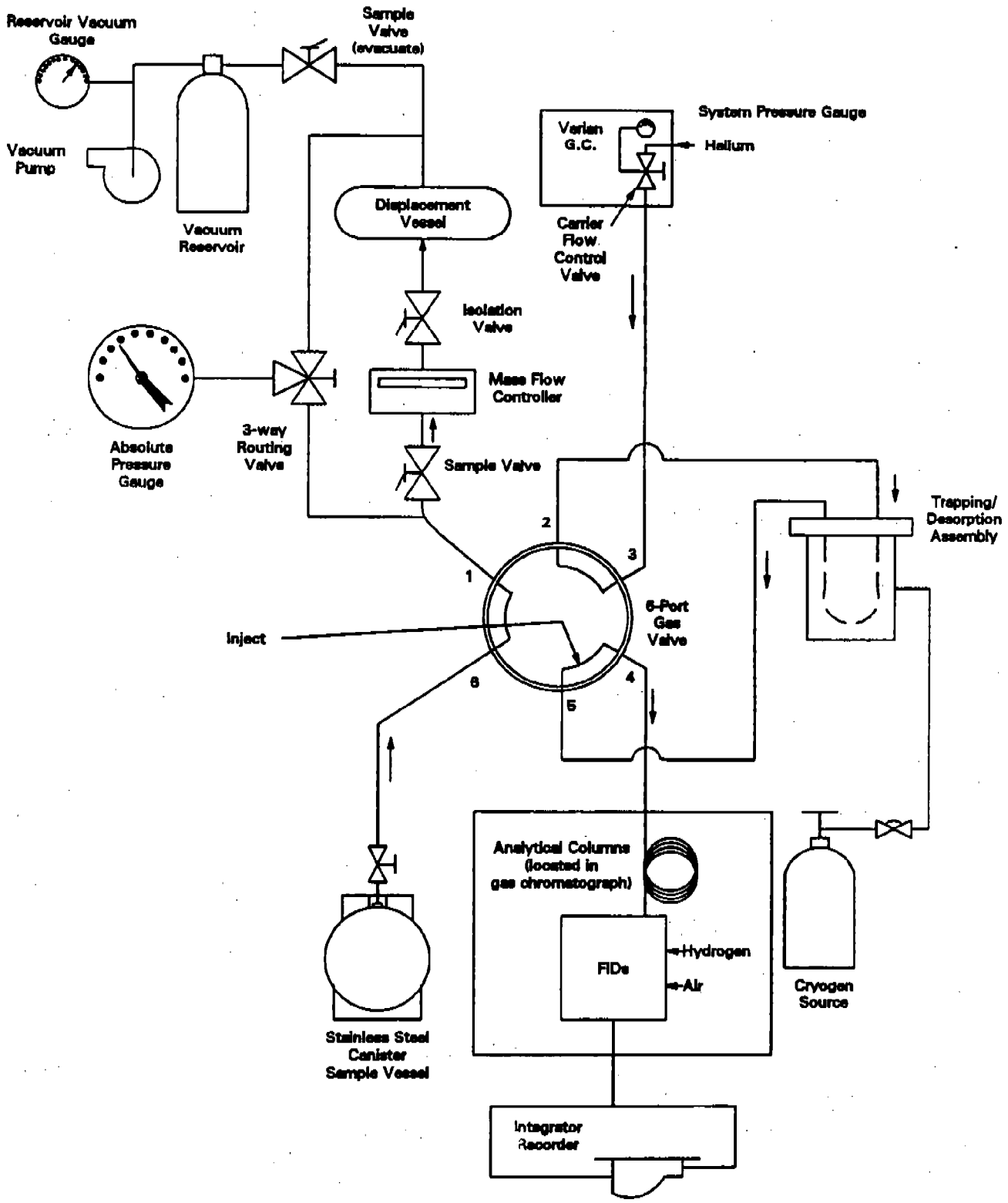

Figure 10-3. Radian Sample Interface in Sample Inject Mode

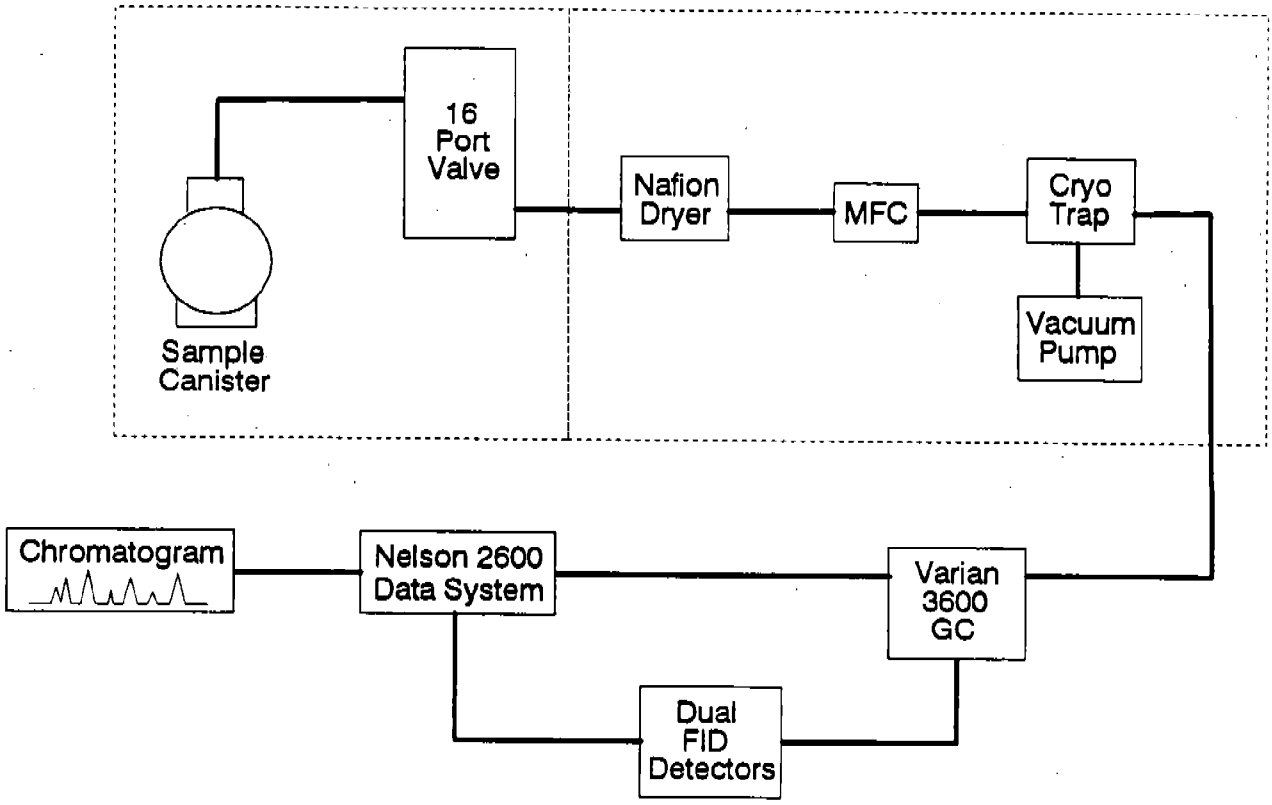

Figure 10-4. Automated Sample Analysis System

The automated system is capable of automatically concentrating a series of 16 air samples. In between sample loading, the sample pathway is continuously purged with humidified air provided by the laboratory clean air generation system.

The automated system uses a vacuum pump to pull the sample into the cryogenic trap. The sample flow path consists of a mass flow controller (MFC) which provides a signal used to electronically integrate the total sample volume and a Nafion® dryer to remove water from the sample. The sample is cryogenically concentrated in a nickel trap filled with nonsilanized glass beads. Injection of the sample on the GC column occurs when the cryotrap is rapidly heated to vaporize any condensed organics, and helium carrier gas sweeps the sample to the head of the GC column.

11.0 SNMOC QUALITY ASSURANCE AND CONTROL PROCEDURES

This section details the steps incorporated into the 1993 SNMOC monitoring program to ensure the data were of high and known quality. Procedures for standard preparation, database set-up, GC calibration, and daily analytical system checks are described. Duplicate samples and repeated analyses (replicates) provided information on sampling and analytical precision. Accuracy was assessed as the percent bias calculated from the analysis of external audit samples.

11.1 Standards Preparation

Certified high pressure stock standards from Scott® Specialty Gases were used to prepare analytical calibration standards across the measurement range of the analytical system. Standards used to establish retention time information were prepared from stock standards prepared using neat liquid compounds injected into cleaned, evacuated canisters, and from certified gaseous stock standards.

All calibration and daily calibration check standards were made from certified standard gases. Gas-tight syringes were used to inject aliquots of the certified standard into cleaned, evacuated SUMMA® canisters. The canisters were then filled to ambient pressure with cleaned, humidified air using a standard preparation flow dilution system, then pressurized with nitrogen to approximately 25 psig using a canister dilution system that consists of a precision vacuum/pressure guage and a high-pressure nitrogen tank.

11.2 Target Compounds Database

Standards used to gather retention time information and set up a reference database using relative retention times referenced to toluene were prepared and analyzed. These relative retention times were used to identify the target compounds in the ambient air samples. These standards were prepared, encompassing the list of target

hydrocarbons, by using gas-tight syringes to inject aliquots of stock standards into clean, evacuated SUMMA® canisters.

11.3 GC/FID Monthly Calibration

The analytical systems were calibrated monthly by analyzing three hydrocarbon standards and a system blank of cleaned, humidified air. The three calibration standards were prepared from a Scott® Specialty Gases certified standard to levels of 5, 15, and 50 ppbv benzene and propane. This calibration range is based on the expected levels of target compound concentrations in ambient air, based on historical information.

The calibration standards were analyzed in order of increasing concentration, and followed by the system blank analysis to ensure no carryover after analysis of the high level standard. For the primary column (1 μm phase thickness), the benzene area count recorded by the FID was correlated to nanoliters of benzene by a least squares linear regression. For the secondary column (5 μm phase thickness), the propane area counts recorded by the FID was correlated to nanoliters of propane by a least squares linear regression. The calibration was considered representative if the coefficient of correlation for the four points was greater than or equal to 0.995 for each column/detector. The slopes of the regression lines were then used to calculate monthly response factors.

The benzene response factor was divided by 6 (carbons/molecule of benzene) to calculate a per carbon response factor for the primary column/detector. The propane response factor was divided by 3 (carbons/molecule of propane) to calculate a per carbon response factor for the secondary column/detector. These response factors were then used to calculate sample concentrations for the following month. Monthly calibration information is summarized in Table 11-1.

Table 11-1

Summary of Monthly Benzene and Propane Calibration Curves

Calibration Date	Primary Column		Secondary Column	
	Correlation Coefficient	Benzene Response Factor (AC/nl-C)	Correlation Factor	Propane Response Factor (AC/nl-C)
Manual Interface System				
05/18/93	1.0000	2169.0	1.0000	1582.9
06/21/93	1.0000	2234.8	1.0000	1644.9
07/21/93	1.0000	2324.2	1.0000	1691.2
08/23/93	0.9995	2263.3	0.9995	1616.1
09/23/93	1.0000	2104.5	0.9998	1625.2
Automated Interface System				
06/03/93	1.0000	1624.6	1.0000	1623.8
07/02/93	1.0000	1507.7	0.9998	1395.4
08/02/93	1.0000	1613.8	1.0000	1548.3
09/02/93	1.0000	1557.0	1.0000	1473.0
10/04/93	1.0000	1575.8	0.9999	1600.6

11.4 Daily Quality Control Check

Daily, prior to sample analysis, a QC standard, prepared from a Scott® Specialty Gases certified standard, was analyzed to ensure the validity of the current monthly response factors. This standard had an approximate concentration of 10 ppbv propane and benzene. This level was considered representative of the majority of concentrations expected in ambient air samples.

The load volume (in liters), benzene area count from the primary detector, and propane area count from the secondary detector were entered into a computer spreadsheet and the current monthly response factors were used to calculate the benzene and propane concentrations. These concentrations were compared to the calculated theoretical concentrations of the QC standard. A concentration percent bias of less than or equal to 30% was considered to be acceptable and the analytical system was in control.

For the SNMOC monitoring program, if the daily QC standard did not meet the 30% criterion a second QC standard was prepared and analyzed. If the second QC standard met the criterion, the analytical system was considered in control. If the second QC check did not pass, a leak test and system maintenance were performed, and a third QC standard analysis was performed. If the criterion was met by the third analysis, the analytical system was considered in control. If the maintenance caused a change in system response, a new calibration curve was required. For the 1993 program the 30% criterion was met on the first standard analysis for every sample analysis day on both analytical systems.

11.5 Daily Analytical System Blank

A system blank of cleaned, humidified air was analyzed after the daily QC standard analysis and prior to sample analyses. The system was considered in control if the total NMOC concentration for the system blank was less than or equal to 20 ppbC. This criterion was met for every sample analysis day on both analytical systems.

11.6 Precision of Sampling and Analysis

The precision of the sampling and analytical methods used for the 1993 SNMOC monitoring program was assessed using data from duplicate sample collections and replicate analyses.

11.6.1 Duplicate Samples

For each program site, eight duplicate sample pairs were scheduled to be collected and analyzed. The actual number of sample pairs collected ranged from seven to nine. For the option sites, one duplicate pair was randomly chosen for analysis. Pooled standard deviations for the duplicate samples were calculated as an indication of sampling precision. Table 11-2 presents the data for all program sites. Table 11-3 presents the data for all optional analysis sites. The duplicate pooled standard deviations show similar results for each compound. This indicates that the sampling procedure for duplicates provided representative ambient air samples.

11.6.2 Replicate Analyses

For each program site, at least half of the duplicate sample pairs were chosen to both be analyzed in replicate to measure analytical precision. For the option sites, half of the duplicate sample pair was also selected to be analyzed in replicate. Tables 11-4 and 11-5 summarize the statistics for the replicate analyses of the program sites and option sites, respectively, in terms of average concentrations, average absolute percent

Table 11-2

1993 Duplicate Statistics for All Program Sites

Compound	Cases	Frequency (%)	Duplicate Pair Statistics			
			Concentration		Average Absolute % Difference	Pooled Standard Deviation
			Median	Average		
Ethylene	60	93.75	9.45	12.93	22.76	2.41
Acetylene	61	95.31	4.76	7.53	15.45	0.72
Ethane	62	96.88	8.88	10.92	19.62	3.01
Propyne	0	0.00	.[a]	.	.	.
Isobutane	54	84.38	3.96	6.52	16.50	0.46
1-Butene	58	90.63	1.66	2.47	11.31	0.04
Isobutene	0	0.00	.	.	.	.
Propylene	61	95.31	2.98	5.05	12.46	0.12
1,3-Butadiene	14	21.88	1.30	1.38	17.39	0.05
n-Butane	63	98.44	7.29	14.34	8.66	1.08
Propane	63	98.44	12.65	27.74	7.74	2.21
t-2-Butene	24	37.50	0.99	1.86	31.24	0.21
c-2-Butene	21	32.81	1.10	2.22	19.07	0.04
3-Methyl-1-butene	17	26.56	0.97	1.39	21.76	0.09
Isopentane	63	98.44	13.39	28.84	3.52	14.84
1-Pentene	34	53.13	1.13	2.25	21.57	0.81
2-Methyl-1-butene	37	57.81	1.32	2.10	9.98	0.06
n-Pentane	62	96.88	6.40	11.07	3.93	0.29
Isoprene	54	84.38	1.74	3.11	5.27	0.03
t-2-Pentene	45	70.31	1.56	2.29	6.59	0.01
c-2-Pentene	31	48.44	1.06	1.62	8.76	0.02
2-Methyl-2-butene	50	78.13	1.72	2.84	9.31	0.07
2,2-Dimethylbutane	61	95.31	3.86	5.22	4.51	0.07
Cyclopentene	13	20.31	0.76	1.03	11.05	0.01
4-Methyl-1-pentene	26	40.63	0.82	1.05	7.72	0.00
Cyclopentane	36	56.25	1.20	1.64	6.82	0.01

JBS441

Table 11-2

Continued

Compound	Cases	Frequency (%)	Duplicate Pair Statistics			
			Concentration		Average Absolute % Difference	Pooled Standard Deviation
			Median	Average		
2,3-Dimethylbutane	50	78.13	1.94	2.58	10.22	0.22
2-Methylpentane	62	96.88	4.23	6.84	3.30	0.02
3-Methylpentane	60	93.75	3.39	4.99	7.39	0.25
2-Methyl-1-pentene	5	7.81	1.23	1.07	25.46	0.05
1-Hexene	22	34.38	0.98	1.24	5.56	0.01
2-Ethyl-1-butene	2	3.13	0.85	0.85	4.33	0.00
n-Hexane	60	93.75	3.09	5.15	3.99	0.03
t-2-Hexene	15	23.44	0.77	0.91	6.49	0.00
c-2-Hexene	9	14.06	0.69	0.78	10.45	0.01
Methylcyclopentane	58	90.63	1.91	2.96	8.55	0.11
2,4-Dimethylpentane	40	62.50	1.22	1.94	5.71	0.03
Benzene	63	98.44	4.73	6.33	3.47	0.03
Cyclohexane	37	57.81	1.95	2.53	16.44	0.18
2,3-Dimethylpentane	33	51.56	1.16	2.15	4.89	0.01
2-Methylhexane	50	78.13	1.60	2.26	10.11	0.50
3-Methylhexane	62	96.88	2.25	2.92	9.14	0.10
2,2,4-Trimethylpentane	58	90.63	3.34	4.98	3.39	0.01
n-Heptane	53	82.81	1.51	2.35	10.42	0.15
Methylcyclohexane	44	68.75	1.61	1.94	11.41	0.04
1-Heptene	1	1.56	0.78	0.78	7.69	0.00
2,2,3-Trimethylpentane	30	46.88	0.91	1.15	7.92	0.00
2,3,4-Trimethylpentane	52	81.25	1.31	1.82	5.03	0.00
Toluene	63	98.44	11.13	16.30	2.52	11.51
2-Methylheptane	38	59.38	1.13	1.53	14.05	0.04
3-Methylheptane	34	53.13	1.01	1.45	4.88	0.03
1-Octene	17	26.56	1.04	1.19	17.97	0.08

JBS441

Table 11-2

Continued

Compound	Cases	Frequency (%)	Duplicate Pair Statistics			
			Concentration		Average Absolute % Difference	Pooled Standard Deviation
			Median	Average		
n-Octane	37	57.81	1.26	1.58	9.01	0.03
Ethylbenzene	58	90.63	2.08	3.05	5.64	0.02
p-Xylene + m-Xylene	64	100.00	5.68	8.16	5.06	0.07
Styrene	43	67.19	1.08	1.33	11.24	0.07
o-Xylene	58	90.63	2.24	3.27	9.69	0.07
1-Nonene	5	7.81	1.10	1.18	7.36	0.00
n-Nonane	31	48.44	1.24	1.54	13.24	0.08
Isopropylbenzene	15	23.44	1.01	1.31	17.32	0.09
alpha-Pinene	32	50.00	1.35	2.64	16.36	0.25
n-Propylbenzene	32	50.00	1.06	1.34	11.39	0.15
m-Ethyltoluene	59	92.19	2.12	3.26	13.27	0.60
p-Ethyltoluene	21	32.81	1.30	1.53	9.27	0.09
1,3,5-Trimethylbenzene	45	70.31	1.22	1.90	9.28	0.10
o-Ethyltoluene	19	29.69	1.09	1.65	20.88	0.15
beta-Pinene	29	45.31	1.17	1.75	6.96	0.01
1-Decene	58	90.63	2.20	3.18	11.21	0.35
1,2,4-Trimethylbenzene	49	76.56	1.34	2.55	14.78	0.45
n-Decane	38	59.38	1.35	1.91	21.31	0.56
1,2,3-Trimethylbenzene	58	90.63	2.16	2.51	19.52	1.31
p-Diethylbenzene	18	28.13	0.82	1.25	21.22	0.22
1-Undecene	40	62.50	0.99	1.50	28.18	0.33
n-Undecane	51	79.69	1.68	2.53	33.32	1.35
1-Dodecene	50	78.13	1.04	1.19	22.12	0.10
n-Dodecane	58	90.63	1.60	2.19	47.40	3.04
1-Tridecene	8	12.50	0.70	0.81	25.05	0.03
n-Tridecane	43	67.19	0.96	1.16	31.62	0.43

*Calculation not possible due to limited data.

Table 11-3

1993 Duplicate Statistics for the Option Sites

Compound	Cases	Frequency (%)	Duplicate Pair Statistics			
			Concentration		Average Absolute % Difference	Pooled Standard Deviation
			Median	Average		
Ethylene	5	100.00	7.79	10.55	12.93	0.66
Acetylene	5	100.00	2.49	11.27	14.71	0.53
Ethane	5	100.00	8.21	9.29	5.59	0.16
Propyne	0	0.00	.[a]	.	.	.
Isobutane	5	100.00	4.00	5.23	23.23	1.33
1-Butene	5	100.00	1.42	2.34	9.81	0.11
Isobutene	0	0.00	.	.	.	.
Propylene	5	100.00	3.51	4.35	4.88	0.03
1,3-Butadiene	1	20.00	0.87	0.87	52.87	0.11
n-Butane	5	100.00	11.37	8.73	3.38	0.07
Propane	5	100.00	7.54	10.86	5.15	0.20
t-2-Butene	3	60.00	1.79	2.00	79.09	1.87
c-2-Butene	1	20.00	2.14	2.14	144.73	4.77
3-Methyl-1-butene	2	40.00	0.97	0.97	23.51	0.03
Isopentane	5	100.00	11.58	14.16	4.33	0.38
1-Pentene	2	40.00	0.86	0.86	13.59	0.01
2-Methyl-1-butene	3	60.00	1.53	1.47	16.02	0.05
n-Pentane	5	100.00	5.11	5.15	5.67	0.08
Isoprene	2	40.00	1.01	1.01	12.23	0.01
t-2-Pentene	4	80.00	1.02	1.13	10.23	0.01
c-2-Pentene	4	80.00	0.76	0.81	28.43	0.14
2-Methyl-2-butene	5	100.00	1.30	1.33	32.61	0.06
2,2-Dimethylbutane	2	40.00	0.78	0.78	9.23	0.00
Cyclopentene	0	0.00	.	.	.	.
4-Methyl-1-pentene	2	40.00	0.90	0.90	20.42	0.02
Cyclopentane	3	60.00	1.60	1.49	63.73	1.03

JBS441

Table 11-3

Continued

Compound	Cases	Frequency (%)	Duplicate Pair Statistics			
			Concentration		Average Absolute % Difference	Pooled Standard Deviation
			Median	Average		
2,3-Dimethylbutane	5	100.00	1.17	1.45	7.27	0.01
2-Methylpentane	5	100.00	3.36	4.65	8.56	0.07
3-Methylpentane	5	100.00	4.69	3.83	21.67	0.98
2-Methyl-1-pentene	1	20.00	0.70	0.70	57.14	0.08
1-Hexene	0	0.00	.	.	.	.
2-Ethyl-1-butene	0	0.00	.	.	.	.
n-Hexane	5	100.00	2.00	2.77	6.32	0.04
t-2-Hexene	0	0.00	.	.	.	.
c-2-Hexene	1	20.00	0.59	0.59	6.78	0.00
Methylcyclopentane	5	100.00	1.03	1.62	7.77	0.02
2,4-Dimethylpentane	2	40.00	1.40	1.40	1.10	0.00
Benzene	5	100.00	3.58	5.41	3.55	0.01
Cyclohexane	3	60.00	1.89	1.49	26.50	0.15
2,3-Dimethylpentane	1	20.00	1.07	1.07	14.52	0.01
2-Methylhexane	4	80.00	1.38	1.83	26.69	0.09
3-Methylhexane	5	100.00	2.45	2.44	5.28	0.02
2,2,4-Trimethylpentane	5	100.00	2.23	3.23	6.97	0.04
n-Heptane	4	80.00	1.32	1.57	29.05	0.54
Methylcyclohexane	4	80.00	0.93	0.93	17.06	0.02
1-Heptene	0	0.00	.	.	.	.
2,2,3-Trimethylpentane	2	40.00	0.90	0.90	21.47	0.04
2,3,4-Trimethylpentane	5	100.00	0.73	1.18	5.06	0.00
Toluene	5	100.00	15.04	17.59	0.59	0.01
2-Methylheptane	4	80.00	0.97	0.97	11.15	0.01
3-Methylheptane	3	60.00	0.91	0.85	7.88	0.00
1-Octene	2	40.00	0.71	0.71	16.92	0.02

Table 11-3

Continued

Compound	Cases	Frequency (%)	Duplicate Pair Statistics			
			Concentration		Average Absolute % Difference	Pooled Standard Deviation
			Median	Average		
n-Octane	2	40.00	0.67	0.67	36.35	0.04
Ethylbenzene	5	100.00	2.46	2.53	5.09	0.01
p-Xylene + m-Xylene	5	100.00	8.18	8.47	1.49	0.01
Styrene	3	60.00	0.86	0.98	14.19	0.02
o-Xylene	5	100.00	2.19	2.71	2.56	0.00
1-Nonene	0	0.00	.	.	.	.
n-Nonane	4	80.00	1.14	1.05	15.98	0.04
Isopropylbenzene	2	40.00	1.74	1.74	16.00	0.04
alpha-Pinene	4	80.00	1.57	1.67	98.37	1.94
n-Propylbenzene	2	40.00	0.99	0.99	25.68	0.03
m-Ethyltoluene	5	100.00	1.30	2.13	12.50	0.35
p-Ethyltoluene	1	20.00	1.04	1.04	2.90	0.00
1,3,5-Trimethylbenzene	5	100.00	1.04	1.19	20.76	0.04
o-Ethyltoluene	5	100.00	0.96	1.23	15.64	0.02
beta-Pinene	1	20.00	0.45	0.45	5.53	0.00
1-Decene	4	80.00	0.93	0.93	20.68	0.09
1,2,4-Trimethylbenzene	5	100.00	2.39	3.30	11.50	0.05
n-Decane	4	80.00	1.61	1.46	18.41	0.03
1,2,3-Trimethylbenzene	5	100.00	3.41	3.77	41.44	2.75
p-Diethylbenzene	1	20.00	0.58	0.58	10.35	0.00
1-Undecene	4	80.00	1.46	1.84	44.42	0.18
n-Undecane	5	100.00	1.70	1.61	43.40	0.27
1-Dodecene	5	100.00	1.12	1.34	61.70	1.28
n-Dodecane	3	60.00	2.18	1.93	79.18	2.63
1-Tridecene	1	20.00	0.50	0.50	24.88	0.01
n-Tridecane	3	60.00	0.88	0.94	48.90	0.15

[a]Calculation not possible due to limited data.

Table 11-4

1993 Replicate Statistics for All Program Sites

Compound	Cases	Frequency (%)	Replicate Pair Statistics			
			Concentration		Average Absolute % Difference	Pooled Standard Deviation
			Median	Average		
Ethylene	64	90.14	7.59	8.91	27.82	4.50
Acetylene	65	91.55	4.55	6.30	24.82	0.99
Ethane	69	97.18	7.09	9.31	31.10	6.17
Propyne	0	0.00	.[a]	.	.	.
Isobutane	53	74.65	3.53	5.80	10.40	0.18
1-Butene	60	84.51	1.57	1.95	12.53	0.05
Isobutene	0	0.00	.	.	.	.
Propylene	63	88.73	3.01	3.87	14.54	0.15
1,3-Butadiene	6	8.45	2.10	1.76	7.62	0.01
n-Butane	69	97.18	6.48	11.08	8.92	2.07
Propane	70	98.59	9.93	30.10	9.65	5.50
t-2-Butene	15	21.13	0.95	1.11	15.39	0.02
c-2-Butene	18	25.35	1.17	1.35	20.16	0.05
3-Methyl-1-butene	13	18.31	1.06	1.08	12.00	0.01
Isopentane	70	98.59	12.18	21.70	3.57	0.37
1-Pentene	36	50.70	1.23	1.85	14.50	0.06
2-Methyl-1-butene	40	56.34	1.08	1.46	7.98	0.04
n-Pentane	69	97.18	4.55	8.88	4.04	0.06
Isoprene	54	76.06	1.62	3.97	6.73	0.03
t-2-Pentene	46	64.79	1.52	1.88	9.00	0.02
c-2-Pentene	32	45.07	1.06	1.26	7.90	0.01
2-Methyl-2-butene	50	70.42	1.68	2.23	11.50	0.04
2,2-Dimethylbutane	66	92.96	3.88	4.72	3.03	0.03
Cyclopentene	12	16.90	0.92	0.94	6.25	0.00
4-Methyl-1-pentene	22	30.99	0.81	0.91	8.28	0.00
Cyclopentane	33	46.48	1.35	1.60	5.21	0.01

Table 11-4

Continued

Compound	Cases	Frequency (%)	Replicate Pair Statistics			
			Concentration		Average Absolute % Difference	Pooled Standard Deviation
			Median	Average		
2,3-Dimethylbutane	47	66.20	1.90	2.39	5.28	0.02
2-Methylpentane	67	94.37	3.82	6.03	4.01	0.02
3-Methylpentane	66	92.96	2.99	4.18	7.40	0.11
2-Methyl-1-pentene	4	5.63	1.23	1.19	78.82	0.65
1-Hexene	18	25.35	0.97	1.00	8.40	0.01
2-Ethyl-1-butene	4	5.63	0.84	0.85	11.33	0.01
n-Hexane	62	87.32	2.49	4.69	4.45	0.02
t-2-Hexene	10	14.08	0.69	0.78	9.84	0.01
c-2-Hexene	2	2.82	0.67	0.67	11.90	0.00
Methylcyclopentane	58	81.69	1.71	2.73	5.63	0.01
2,4-Dimethylpentane	44	61.97	1.19	1.58	4.49	0.00
Benzene	70	98.59	3.77	5.09	4.34	0.04
Cyclohexane	30	42.25	1.97	2.29	16.24	0.54
2,3-Dimethylpentane	38	53.52	0.99	1.86	6.80	0.01
2-Methylhexane	51	71.83	1.39	1.83	10.21	0.06
3-Methylhexane	68	95.77	1.98	2.56	7.17	0.02
2,2,4-Trimethylpentane	64	90.14	3.29	4.16	4.16	0.01
n-Heptane	50	70.42	1.46	2.23	11.57	0.03
Methylcyclohexane	40	56.34	1.45	2.01	13.70	0.13
1-Heptene	0	0.00	.	.	.	.
2,2,3-Trimethylpentane	26	36.62	0.94	1.04	8.13	0.01
2,3,4-Trimethylpentane	52	73.24	1.19	1.61	3.61	0.00
Toluene	70	98.59	9.33	12.42	2.43	0.07
2-Methylheptane	32	45.07	1.21	1.50	15.66	0.05
3-Methylheptane	29	40.85	1.14	1.31	8.36	0.02
1-Octene	14	19.72	0.83	1.02	5.96	0.01

Table 11-4

Continued

Compound	Cases	Frequency (%)	Replicate Pair Statistics			
			Concentration		Average Absolute % Difference	Pooled Standard Deviation
			Median	Average		
n-Octane	35	49.30	1.32	1.68	9.71	0.09
Ethylbenzene	61	85.92	2.08	2.62	6.35	0.02
p-Xylene + m-Xylene	71	100.00	5.30	6.67	4.89	0.03
Styrene	42	59.15	0.80	1.22	7.36	0.01
o-Xylene	62	87.32	2.26	2.80	5.36	0.06
1-Nonene	6	8.45	0.83	0.99	8.97	0.02
n-Nonane	30	42.25	0.99	1.47	20.18	0.12
Isopropylbenzene	9	12.68	1.24	1.45	16.29	0.04
alpha-Pinene	31	43.66	1.38	2.70	11.93	0.26
n-Propylbenzene	31	43.66	0.97	1.16	4.91	0.00
m-Ethyltoluene	62	87.32	2.04	3.21	10.90	0.22
p-Ethyltoluene	16	22.54	1.24	1.54	9.58	0.02
1,3,5-Trimethylbenzene	40	56.34	1.19	1.89	9.37	0.03
o-Ethyltoluene	12	16.90	0.76	0.97	19.18	0.03
beta-Pinene	26	36.62	1.11	1.62	5.13	0.02
1-Decene	61	85.92	2.69	3.29	3.31	0.00
1,2,4-Trimethylbenzene	49	69.01	1.39	1.84	5.64	0.01
n-Decane	39	54.93	1.38	2.00	12.24	0.13
1,2,3-Trimethylbenzene	62	87.32	2.08	2.38	8.60	0.13
p-Diethylbenzene	14	19.72	0.84	1.70	10.85	0.02
1-Undecene	29	40.85	1.18	1.96	8.58	0.02
n-Undecane	53	74.65	1.63	2.62	21.39	0.23
1-Dodecene	40	56.34	1.14	1.26	17.99	0.04
n-Dodecane	61	85.92	1.53	2.65	30.64	0.41
1-Tridecene	3	4.23	0.51	0.65	17.91	0.02
n-Tridecane	41	57.75	0.95	1.37	19.09	0.11

[a]Calculation not possible due to limited data.

Table 11-5

1993 Replicate Statistics for the Option Sites

Compound	Cases	Frequency (%)	Replicate Pair Statistics			
			Concentration		Average Absolute % Difference	Pooled Standard Deviation
			Median	Average		
Ethylene	5	100.00	8.42	10.61	17.89	1.10
Acetylene	5	100.00	2.19	11.02	15.86	0.40
Ethane	5	100.00	8.77	9.47	16.19	0.95
Propyne	0	0.00	.[a]	.	.	.
Isobutane	5	100.00	3.72	5.21	18.30	0.37
1-Butene	5	100.00	1.43	2.46	20.06	0.61
Isobutene	0	0.00	.	.	.	.
Propylene	5	100.00	3.67	4.39	6.06	0.03
1,3-Butadiene	0	0.00	.	.	.	.
n-Butane	5	100.00	11.06	8.59	4.96	0.14
Propane	5	100.00	8.03	10.91	3.28	0.04
t-2-Butene	2	40.00	1.36	1.36	45.29	0.23
c-2-Butene	3	60.00	1.38	1.14	63.63	0.65
3-Methyl-1-butene	1	20.00	0.73	0.73	81.38	0.17
Isopentane	5	100.00	11.22	14.32	5.94	0.62
1-Pentene	2	40.00	0.90	0.90	12.16	0.01
2-Methyl-1-butene	3	60.00	1.77	1.59	6.27	0.01
n-Pentane	5	100.00	4.75	5.13	4.21	0.01
Isoprene	2	40.00	0.94	0.94	10.11	0.01
t-2-Pentene	4	80.00	0.98	1.16	15.75	0.02
c-2-Pentene	3	60.00	0.59	0.94	51.18	0.83
2-Methyl-2-butene	5	100.00	1.14	1.30	25.49	0.08
2,2-Dimethylbutane	1	20.00	0.60	0.60	13.33	0.00
Cyclopentene	0	0.00	.	.	.	.
4-Methyl-1-pentene	2	40.00	1.00	1.00	45.84	0.14
Cyclopentane	2	40.00	0.85	0.85	16.27	0.01

JBS441

Table 11-5

Continued

Compound	Cases	Frequency (%)	Replicate Pair Statistics			
			Concentration		Average Absolute % Difference	Pooled Standard Deviation
			Median	Average		
2,3-Dimethylbutane	5	100.00	1.09	1.45	10.22	0.02
2-Methylpentane	5	100.00	3.13	4.68	6.03	0.04
3-Methylpentane	5	100.00	3.40	3.67	18.18	0.54
2-Methyl-1-pentene	1	20.00	0.90	0.90	97.78	0.39
1-Hexene	1	20.00	0.57	0.57	19.47	0.01
2-Ethyl-1-butene	0	0.00	.	.	.	.
n-Hexane	5	100.00	1.94	2.71	7.10	0.02
t-2-Hexene	0	0.00	.	.	.	.
c-2-Hexene	0	0.00	.	.	.	.
Methylcyclopentane	5	100.00	1.03	1.66	13.35	0.02
2,4-Dimethylpentane	2	40.00	1.41	1.41	6.13	0.00
Benzene	5	100.00	3.56	5.34	3.81	0.02
Cyclohexane	5	100.00	0.75	1.29	34.95	0.08
2,3-Dimethylpentane	1	20.00	1.15	1.15	0.87	0.00
2-Methylhexane	4	80.00	1.49	1.98	2.81	0.02
3-Methylhexane	5	100.00	2.50	2.43	6.73	0.02
2,2,4-Trimethylpentane	5	100.00	2.24	3.26	18.84	0.11
n-Heptane	5	100.00	0.95	1.20	43.75	0.15
Methylcyclohexane	3	60.00	1.41	1.17	31.13	0.16
1-Heptene	0	0.00	.	.	.	.
2,2,3-Trimethylpentane	2	40.00	0.79	0.79	19.50	0.01
2,3,4-Trimethylpentane	5	100.00	0.68	1.17	3.19	0.00
Toluene	5	100.00	15.00	17.56	3.62	0.18
2-Methylheptane	5	100.00	0.87	0.94	30.68	0.06
3-Methylheptane	3	60.00	0.93	0.83	10.30	0.00
1-Octene	1	20.00	0.68	0.68	42.96	0.04

Table 11-5

Continued

Compound	Cases	Frequency (%)	Replicate Pair Statistics			
			Concentration		Average Absolute % Difference	Pooled Standard Deviation
			Median	Average		
n-Octane	2	40.00	0.78	0.78	46.91	0.10
Ethylbenzene	5	100.00	2.53	2.53	9.86	0.04
p-Xylene + m-Xylene	5	100.00	8.20	8.50	2.37	0.03
Styrene	3	60.00	0.89	0.92	8.64	0.00
o-Xylene	5	100.00	2.21	2.69	5.92	0.02
1-Nonene	0	0.00	.	.	.	.
n-Nonane	3	60.00	1.29	1.32	49.82	0.24
Isopropylbenzene	2	40.00	1.88	1.88	36.36	0.23
alpha-Pinene	3	60.00	0.73	1.23	25.92	0.04
n-Propylbenzene	2	40.00	0.99	0.99	33.82	0.07
m-Ethyltoluene	5	100.00	1.27	1.96	2.43	0.00
p-Ethyltoluene	2	40.00	0.96	0.96	7.30	0.00
1,3,5-Trimethylbenzene	5	100.00	1.25	1.29	41.51	0.28
o-Ethyltoluene	5	100.00	0.97	1.21	31.17	0.05
beta-Pinene	1	20.00	0.47	0.47	15.05	0.00
1-Decene	5	100.00	0.94	1.18	8.18	0.00
1,2,4-Trimethylbenzene	4	80.00	3.45	3.68	12.48	0.08
n-Decane	4	80.00	1.62	1.50	15.18	0.02
1,2,3-Trimethylbenzene	5	100.00	3.79	4.24	6.15	0.03
p-Diethylbenzene	1	20.00	1.69	1.69	58.75	0.49
1-Undecene	5	100.00	2.27	2.06	9.63	0.04
n-Undecane	5	100.00	1.79	1.80	36.10	0.80
1-Dodecene	5	100.00	1.09	1.69	10.54	0.02
n-Dodecane	5	100.00	2.82	2.41	55.91	2.25
1-Tridecene	3	60.00	1.00	1.88	26.32	0.18
n-Tridecane	5	100.00	1.05	1.07	41.22	0.39

*Calculation not possible due to limited data.

JBS441

differences, and pooled standard deviations. The results show excellent results for analytical precision.

11.7 Accuracy

Two external audits were supplied by the EPA QA contractor. Tables 11-6 and 11-7 summarize the results of these audits. Both audit samples were analyzed by both GC systems. The tables designate the manual interface and the automated interface GCs and the average concentration reported by the two systems. Both systems detected m-ethyltoluene and 1,2,3-trimethylbenzene. Each of these two compounds was detected in both audit samples at similar ratios with the compound of the same molecular weight and similar structure. Radian, therefore, believes the compounds were in the audit samples. The results show good analytical accuracy. The first audit sample showed a percent bias ranging from -15.7% (3-methylpentane) to +16.9% (1-butene) with an average of -7.9 percent. The second audit sample showed a percent bias ranging from -20.4% (ethane) to +16.2% (1-butene) with an average of -7.3 percent. The overall average is -7.6 percent.

11.8 Data Acquisition and Reduction Procedures

A PE Nelson® 2600 Chromatography Data System consisting of a 900 Series Intelligent Interface and a PC system containing the 2600 software was used to acquire, integrate and store the analytical data. A chromatogram and area count report from each detector are printed for each analysis. Electronic copies of the data were stored on 20 Mb disk cartridges, and a compressed backup disk was also made.

The data were processed using Radian Peak Identification Program (RPIP) software. The RPIP used a database containing relative retention time information for all compounds of interest and applicable response factors to process the data files. A preliminary report was generated containing possible peak identifications and quantitations based on the carbon response factor in effect at the time of analysis.

Table 11-6

Speciated NMOC External Audit Results for Audit Sample 1862

Compound	Theoretical	Concentration, ppbC			Percent Bias from Theoretical		
		Radian					
		Manual	Automated	Average	Manual	Automated	Average
Ethylene	16.8	13.65	15.80	14.73	-18.8	-6.0	-12.4
Ethane	15.8	13.50	15.55	14.53	-14.6	-1.6	-8.1
Propane	23.5	21.70	22.15	21.93	-7.7	-5.7	-6.7
1-Butene	27.4	33.35	30.70	32.03	21.7	12.0	16.9
t-2-Butene	30.4	31.20	27.80	29.50	2.6	-8.6	-3.0
3-Methyl-1-butene	42.1	40.55	35.95	38.25	-3.7	-14.6	-9.1
1-Pentene	37.8	38.75	32.65	35.70	2.5	-13.6	-5.6
Isoprene	38.2	35.45	29.65	32.55	-7.2	-22.4	-14.8
c-2-Pentene	37.0	36.80	30.75	33.78	-0.5	-16.9	-8.7
2,2-Dimethylbutane	53.5	58.25	48.60	53.43	8.9	-9.2	-0.1
4-Methyl-1-pentene	50.3	48.25	43.05	45.65	-4.1	-14.4	-9.2
2,3-Dimethylbutane	53.5	50.70	46.25	48.48	-5.2	-13.6	-9.4
3-Methylpentane	57.8	49.85	47.65	48.75	-13.8	-17.6	-15.7
n-Hexane	51.3	51.60	45.10	48.35	0.6	-12.1	-5.8
c-2-Hexene	49.0	49.65	41.90	45.78	1.3	-14.5	-6.6
2,4-Dimethylpentane	63.8	61.45	54.90	58.18	-3.7	-13.9	-8.8
Cyclohexane	55.2	53.40	47.40	50.40	-3.3	-14.1	-8.7
2,3-Dimethylpentane	70.5	64.85	57.50	61.18	-8.0	-18.4	-13.2
2,2,4-Trimethylpentane	76.9	74.95	67.05	71.00	-2.5	-12.8	-7.7
Methylcyclohexane	66.3	65.20	57.25	61.23	-1.7	-13.7	-7.7
2,3,4-Trimethylpentane	71.9	70.50	60.55	65.53	-1.9	-15.8	-8.9
2-Methylheptane	75.4	75.65	64.20	69.93	0.3	-14.9	-7.3
Ethylbenzene	74.3	73.90	60.10	67.00	-0.5	-19.1	-9.8
m/p-Xylene	74.5	74.80	61.30	68.05	0.4	-17.7	-8.7
o-Xylene	72.3	72.70	59.20	65.95	0.6	-18.1	-8.8
Isopropylbenzene	82.4	80.60	66.50	73.55	-2.2	-19.3	-10.7
m-Ethyltoluene		27.30	15.40	21.35			
1,3,5-Trimethylbenzene	84.2	79.35	64.85	72.10	-5.8	-23.0	-14.4
1,2,3-Trimethylbenzene		4.35	8.05	6.20			
				Average	-2.4	-13.3	-7.9

Table 11-7

Speciated NMOC External Audit Results for Audit Sample 1865

Compound	Theoretical	Concentration, ppbC			Percent Bias from Theoretical		
		Radian					
		Manual	Automated	Average	Manual	Automated	Average
Ethylene	30.90	26.50	29.00	27.75	-14.2	-6.1	-10.2
Ethane	29.10	18.80	27.55	23.18	-35.4	-5.3	-20.4
Propane	43.20	42.30	40.90	41.60	-2.1	-5.3	-3.7
1-Butene	50.40	59.45	57.65	58.55	18.0	14.4	16.2
t-2-Butene	55.80	58.50	51.70	55.10	4.8	-7.3	-1.3
3-Methyl-1-butene	77.40	72.40	68.95	70.68	-6.5	-10.9	-8.7
1-Pentene	69.60	68.05	63.00	65.53	-2.2	-9.5	-5.9
Isoprene	70.40	62.40	58.45	60.43	-11.4	-17.0	-14.2
c-2-Pentene	68.00	63.60	59.85	61.73	-6.5	-12.0	-9.2
2,2-Dimethylbutane	98.40	100.70	92.00	96.35	2.3	-6.5	-2.1
4-Methyl-1-pentene	92.50	85.55	81.10	83.33	-7.5	-12.3	-9.9
2,3-Dimethylbutane	98.40	90.25	88.00	89.13	-8.3	-10.6	-9.4
3-Methylpentane	97.00	90.45	91.25	90.85	-6.8	-5.9	-6.3
n-Hexane	94.30	91.30	87.60	89.45	-3.2	-7.1	-5.1
c-2-Hexene	90.00	87.00	81.55	84.28	-3.3	-9.4	-6.4
2,4-Dimethylpentane	117	109.00	107.00	108.00	-6.8	-8.5	-7.7
Cyclohexane	102	94.60	91.25	92.93	-7.3	-10.5	-8.9
2,3-Dimethylpentane	130	115.00	111.50	113.25	-11.5	-14.2	-12.9
2,2,4-Trimethylpentane	141	132.50	130.00	131.25	-6.0	-7.8	-6.9
Methylcyclohexane	121	114.00	111.00	112.50	-5.8	-8.3	-7.0
2,3,4-Trimethylpentane	132	124.00	117.50	120.75	-6.1	-11.0	-8.5
2-Methylheptane	139	132.50	124.50	128.50	-4.7	-10.4	-7.6
Ethylbenzene	137	130.00	119.50	124.75	-5.1	-12.8	-8.9
m/p-Xylene	137	133.00	122.50	127.75	-2.9	-10.6	-6.8
o-Xylene	133	128.50	119.00	123.75	-3.4	-10.5	-7.0
Isopropylbenzene	152	143.50	134.00	138.75	-5.6	-11.8	-8.7
m-Ethyltoluene		48.70	34.25	41.48			
1,3,5-Trimethylbenzene	155	144.50	132.00	138.25	-6.8	-14.8	-10.8
1,2,3-Trimethylbenzene		6.80	17.85	12.33			
				Average	-5.7	-9.0	-7.3

A data reviewer compared the RPIP report to the chromatogram to determine proper peak identifications. A second data review was performed to check for items which may have been overlooked on the first pass. After the data was reviewed twice, a final RPIP report was processed and reviewed for completeness. Final report versions containing information on all quantitated peaks were printed and filed with the analysis chromatogram printout and preliminary RPIP report. Electronic copies of all RPIP reports were also kept on file.

12.0 RECOMMENDATIONS

12.1 General

12.1.1 Vertical Stratification Study

In 1987, 1988, and 1989 ambient air samples were taken at ground level (3 to 10 meters) and at the 1197-foot (364.9-meter) level at one site. In 1988, an additional site was located on top of the World Trade Center in New York, a height of over 1000 feet. It is recommended that further study be performed at these sampling heights and that at least one more level (at 100 meters or some other appropirate height above ground level) be sampled at the same location. Upper atmospheric meteorological characterization measurements need to be made using a Wind Profiling system. Subsequent NMOC and meteorological data should be correlated. These samples should be analyzed for NMOC content as well as for the air toxics compound concentrations. It is also recommended that ozone concentrations and NO_x concentrations be monitored at the same locations and altitudes. The information gained from such a study would be useful in validating various atmospheric model predicitions.

12.1.2 Seasonal NMOC Studies

Data derived in a study qualifying NMOC and NO_x in seasons other than summer could be useful in understanding the relationship of NMOC to NO_x and meteorological conditions. Currently a year-round study for 24-hour air toxics ambient air samples is being conducted. No study is currently in progress to determine seasonal NMOC concentration changes.

12.1.3 Field Audit

It is recommended that a field audit be designed and conducted at several NMOC/SNMOC sites during the 1994 Monitoring Program. One field audit per month

should be performed at an NMOC/SNMOC site during June, July, August, and September 1994. The field audit should use at least one standard of known NMOC/SNMOC concentration and should collect duplicate samples plus a zero-air blank for each site. The audit samples should use both dry and humid standards.

12.1.4 External Analytical Audits

It is recommended that external audit results supply both the theroetical concentration values and the auditor's analytical values. This should allow for the resolve of potential low-level contaminant compounds.

12.2 Equipment

12.2.1 Multiple Episode Sample Collection Equipment

A design for a multiple episode sampler has been completed. It is recommended that a prototype instrument be built according to the design. The prototype sampler should then be checked out and tested.

12.2.2 Current Sampling Equipment

The NMOC Program began in 1984. Some of the sampling equipment has been in used since 1984. Prior to the beginning of the 1992 sampling season, approximately 10 sampling systems were rebuilt using a new chassis-design (See Section 3.0). As the current sampling equipment fails, it is recommended to rebuild the samplers according to the more user-friendly chassis-design system (Style B) or the above mentioned multiple episode sampler.

12.2.3 Cleaning and Analytical Equipment

Much of the current cleanup system has been in operation since 1984. The original intended use of the equipment has been expanded to include year-round use. As components fail, provisions need to be made for replacements.

The GCs used for the PDFID method are also beginning to show signs of wear and tear. Maintenance of these systems must be maintained. And as with the cleanup system components, provisions need to be made for replacement parts as the need arises.

12.3 SNMOC

12.3.1 Expansion of Target Compound List

With the approval of the Clean Air Act Amendments (CAAA) compounds, it is recommended to expand the list of the current target compounds to include the appropriate ozone precursor CAAA compounds.

12.4 Air Toxics

12.4.1 Compound Stability Study

Depending on the intended use of the data collected under this option of the NMOC Program, further study may be needed to determine the compound stability in canisters. If health risk assessment is the intended use of this data, a compound stability study is recommended. Compound stability in this context refers to whether the apparent concentration of a compound in a sample taken from a canister is changing over time. The apparent change in concentration may result from a chemical reaction of the compound while it is in the canister, or result from a change in the gas phase concentration caused by adsorption of the compound on the interior canister surfaces.

A study needed to investigate this phenomenon would take several canisters--at least three from each initial concentration--ranging in target compound concentration from 0.0 to 20 ppbv. The canisters would be analyzed 24 hours after mixing, 72 hours after mixing, 30 days after mixing, and 60 days after mixing to determine any concentration changes. It is also recommended that the same concentration be mixed in canisters, but that equilibration time of 7 days and 30 days be assigned before the first samples are drawn from the canisters to determine the effect of equilibration time on the concentration sample withdrawn from the canisters.

12.4.2 Expansion of Target Compound List

With the approval of the Clean Air Act Amendments compounds, it is recommended to expand the list of the current target 38 air toxic compounds to include the appropriate airborne toxic compounds.

12.5 Carbonyls

12.5.1 Use of Ozone Scrubber

Previous studies showed that the ozone scrubber was needed to accurately measure the carbonyl concentration in ambient air when sampling occurs with silica gel media. It is recommended to continue using the carbonyl ozone scrubber when sampling for carbonyl compounds.

12.5.2 Life of Ozone Scrubber

It is recommended to determine the life of the effectiveness of the ozone scrubbers. Some preliminary studies performed by the US EPA indicated that the effective life was approximately 6000 sample-hours. These results need to be checked and more definitively defined with field studies that extend over several years.

13.0 REFERENCES

1. Compendium Method TO-12, "Determination of Non-Methane Organic Compounds (NMOC) in Ambient Air Using Cryogenic Pre-Concentration and Direct Flame Ionization Detection (PDFID)," Quality Assurance Division, Environmental Monitoring Systems Laboratory, U.S. Environmental Protection Agency, Research Triangle Park, NC, 27711, May 1988.

2. Radian Corporation. Support for the Ozone Precursor, Toxic Emissions Initiative Including Documentation of Nonmethane Organic Compounds (NMOC), Speciated Volatile Organic Compounds (VOC), and Toxic Compounds, Work Plan and Quality Assurance Project Plan. DCN No. 93-298-130-12-01. Prepared for the U.S. Environmental Protection Agency, Research Triangle Park, NC. EPA Contract No. 62D20160.

3. Radian Corporation. 1992 Nonmethane Organic Compounds and Speciated Nonmethane Organic Compounds Monitoring Program Final Report. DCN No.-93-298-017-70-13. Prepared for the U.S. Environmental Protection Agency, Research Triangle Park, NC. April 1993.

4. Radian Corporation. 1991 Nonmethane Organic Compound, Speciated Nonmethane Organic Compound, and Three-Hour Urban Air Toxics Monitoring Program Final Report. DCN No. 91-262-045-90. Prepared for the U.S. Environmental Protection Agency, Research Triangle Park, NC. August 1992.

5. Radian Corporation. 1990 Nonmethane Organic Compound and Three-Hour Air Toxics Monitoring Program. Final Report. Prepared for U. S. Environmental Protection Agency, Research Triangle Park, NC, 27711, DCN No. 91-262-045-04. January 1991.

6. Radian Corporation. 1989 Nonmethane Organic Compound and Three-Hour Air Toxics Monitoring Program. Final Report. Prepared for U. S. Environmental Protection Agency, Research Triangle Park, NC, 27711, EPA-450/4-90-011. May 1990.

7. Radian Corporation. 1988 Nonmethane Organic Compound and Urban Air Toxics Monitoring Program. Final Report. Volume I. U. S. Environmental Protection Agency, Research Triangle Park, NC, 27711, EPA-450/4-89-003. December 1988.

8. Radian Corporation, 1987 Nonmethane Organic Compound and Air Toxics Monitoring Programs. Final Report Volume 1 - Hydrocarbons, U. S. Environmental Protection Agency, Research Triangle Park, NC. EPA-450/4-88-011. August 19, 1988.

9. McAllister, R. A., R. F. Jongleux, D-P. Dayton, P. L. O'Hara, and D. E. Wagoner (Radian Corporation). Nonmethane Organic Compound Monitoring. Final Report. Prepared for U.S. Environmental Protection Agency, Research Triangle Park, NC. EPA Contract No. 68-02-3889, July 1987.

10. McAllister, R. A., D-P. Dayton, and D. E. Wagoner (Radian Corporation). Nonmethane Organic Compound Monitoring. Final Project Report. Prepared for U.S. Environmental Protection Agency, Research Triangle Park, NC. EPA Contract No. No. 68-02-3889, January 1986.

11. Radian Corporation. Nonmethane Organic Compounds Monitoring Assistance for Certain States in EPA Regions III, IV, V, VI, and VII, Phase II. Final Project Report. Prepared for the U.S. Environmental Protection Agency, Research Triangle Park, NC. EPA Contract No. 38-02-3513, February 1985.

12. Compendium Method TO-14. The Determination of Volatile Organic Compounds (VOCs) in Ambient Air Using SUMMA® Passivated Canister Sampling and Gas Chromatographic Analysis. Quality Assurance Division, Environmental Monitoring Systems Laboratory, United States Environmental Protection Agency, Research Triangle Park, NC.

13. Compendium Method TO-11. Determination of Formaldehyde in Ambient Air Using Adsorbent Cartridge Followed by High Performance Liquid Chromatography. Atmospheric Research and Exposure Assessment Laboratory, Office of Research and Development, United States Environmental Protection Agency, Research Triangle Park, NC.

APPENDIX A

SAMPLING SITES FOR 1993 NMOC MONITORING PROGRAM

Table A-1. 1993 NMOC/SNMOC Program Sites

Region	# of Sites	Radian Site Code	AIRS Code	Location	Base Program	Options: SNMOC	Options: 3-Hr Toxics	Options: Carbonyl
2	1	LINY	36-059-0005	Long Island, NY	NMOC	Yes		
	1	NWNJ	34-013-0011	Newark, NJ	NMOC	Yes	Yes	Yes
	1	PLNJ	34-039-5001	Plainfield, NJ	NMOC	Yes	Yes	Yes
3	1/2	P1PA	42-017-0012	Bristol, PA	NMOC	Yes	Yes	
	1/2	P2PA	42-091-0013	Norristown, PA	NMOC	Yes	Yes	
4	1	B1AL	01-073-6002	Birmingham, AL (Tarrant)	SNMOC		Yes	
	1	B2AL	01-073-5002	Birmingham, AL (Pinson)	SNMOC		Yes	
	1	B3AL	01-117-0004	Birmingham, AL (Helena)	SNMOC		Yes	
6	1	DLTX	48-113-0069	Dallas, TX	SNMOC			
	1	BMTX	48-245-0009	Beaumont TX	SNMOC			
	1	H1TX	48-201-1034	Houston, TX	SNMOC			
	1	FWTX	48-439-1002	Ft. Worth, TX	SNMOC			
	1	EPTX	48-141-0027	El Paso, TX	SNMOC			
	1	JUMX	80-006-0001	Juarez, Mexico	SNMOC			

AMP380

AIR QUALITY SUBSYSTEM
SITE DESCRIPTION INVENTORY

EPA REGION: 04 STATE (01): ALABAMA

SITE ID: 01-073-5002 ADDRESS: PINSON, HIGH SCH., BOX 360 HWY 75 NORTH STATE/LOCAL ID:
CITY POPULATION : 1 CITY (00000): NOT IN A CITY DIST CITY: 032 K UTM ZONE : 16
AQCR POPULATION : 1,168,098 COUNTY (073): JEFFERSON CO DIFF GMT : 06 UTM NORTH: 3729242
DATE ESTABLISHED: / / ELEV MSL : 201 M UTM EAST : 530684
MET SITE: DATE TERMINATED : / / COMP SECT: NE LATITUDE : +33:42:16
SITE ID : - - DATE LAST UPDATE: 1992/06/22 LONGITUDE: -086:40:08
DISTANCE SITE : M HQ EVAL DATE : 1980/07/17
DIRECTION SITE: REGN EVAL DATE : / /
TYPE SITE ( ):

AQCR (004): METROPOLITAN BIRMINGHAM
CMSA LOCATED IN (0000): ** DESCRIPTION UNKNOWN **
LAND USE (1): RESIDENTIAL
LOCATION SETTING (3): RURAL
MSA LOCATED IN (1000): BIRMINGHAM, AL
SITE COMMENT 1 : PINSON VALLEY HIGH SCHOOL BY TENNIS COURTS IN FRONT OF SCHOOL
SITE COMMENT 2 : NAMS OZONE
SUPPORTING AGENCY (012): JEFFERSON COUNTY DEPARTMENT OF HEALTH
URBAN AREA REPRESENTED (1000): BIRMINGHAM, AL

TANGENT STREET:

STREET #	TRAFFIC FLOW	YR TRAFFIC	DIR	STREET NAME	TYPE ROAD
1	13000				(5): THRU ST OR HY

SITE ID: 01-073-6002 ADDRESS: TARRANT, ELEM. SCH., 1269 PORTLAND STREE STATE/LOCAL ID:
CITY POPULATION : 8,148 CITY (75000): TARRANT CITY DIST CITY: 013 K UTM ZONE : 16
AQCR POPULATION : 1,168,098 COUNTY (073): JEFFERSON CO DIFF GMT : 06 UTM NORTH: 3715234
DATE ESTABLISHED: / / ELEV MSL : 171 M UTM EAST : 520984
MET SITE: DATE TERMINATED : / / COMP SECT: NE LATITUDE : +33:34:42
SITE ID : - - DATE LAST UPDATE: 1992/05/18 LONGITUDE: -086:46:26
DISTANCE SITE : M HQ EVAL DATE : 1980/07/17
DIRECTION SITE: REGN EVAL DATE : / /
TYPE SITE ( ):

AQCR (004): METROPOLITAN BIRMINGHAM
CMSA LOCATED IN (0000): ** DESCRIPTION UNKNOWN **
LAND USE (1): RESIDENTIAL
LOCATION SETTING (2): SUBURBAN
MSA LOCATED IN (1000): BIRMINGHAM, AL
SITE COMMENT 1 : TARRANT ELEM. SCH. NEAR TENNIS COURTS BEHIND SCHOOL
SITE COMMENT 2 : NAMS TSP AND OZONE
SUPPORTING AGENCY (012): JEFFERSON COUNTY DEPARTMENT OF HEALTH
URBAN AREA REPRESENTED (1000): BIRMINGHAM, AL

EPA REGION: 04 STATE (01): ALABAMA

SITE ID: 01-073-6002
TANGENT STREET:

STREET #	TRAFFIC FLOW	YR TRAFFIC	DIR	STREET NAME	TYPE ROAD
1	2000				(6): LOCAL ST OR HY
2	300				(6): LOCAL ST OR HY
3	1500				(4): MAJ ST OR HY
4	80000				(4): MAJ ST OR HY

SITE ID: 01-117-0004 ADDRESS: BEARDEN FARM
STATE/LOCAL ID:

CITY POPULATION : 1
AQCR POPULATION : 1,168,098

CITY (00000): NOT IN A CITY
COUNTY (117): SHELBY CO
DATE ESTABLISHED: 1983/01/01
DATE TERMINATED : / /
DATE LAST UPDATE: 1992/09/17
HQ EVAL DATE : / /
REGN EVAL DATE : / /

DIST CITY: K
DIFF GMT :
ELEV MSL : 600 M
COMP SECT:

UTM ZONE : 16
UTM NORTH: 3686270
UTM EAST : 516280
LATITUDE : +33:19:01
LONGITUDE: -086:49:30

MET SITE:
SITE ID : - -
DISTANCE SITE : M
DIRECTION SITE:
TYPE SITE ( ):

AQCR (004): METROPOLITAN BIRMINGHAM
CMSA LOCATED IN (0000): ** DESCRIPTION UNKNOWN **
LAND USE (4): AGRICULTURAL
LOCATION SETTING (3): RURAL
MSA LOCATED IN (1000): BIRMINGHAM, AL
SUPPORTING AGENCY (011): AL DEPT. OF ENV. MGT.
URBAN AREA REPRESENTED (1000): BIRMINGHAM, AL

TANGENT STREET:

STREET #	TRAFFIC FLOW	YR TRAFFIC	DIR	STREET NAME	TYPE ROAD
1	1000				(6): LOCAL ST OR HY
2	20				(6): LOCAL ST OR HY

AIR QUALITY SUBSYSTEM
SITE DESCRIPTION INVENTORY

EPA REGION: 02 STATE (34): NEW JERSEY

SITE ID: 34-013-0011 ADDRESS: ST. CHARLES BETWEEN KOSSUTH & KAMERON ST STATE/LOCAL ID:
CITY POPULATION : 329,248 CITY (51000): NEWARK DIST CITY: 015 K UTM ZONE : 18
AQCR POPULATION : 16,525,701 COUNTY (013): ESSEX CO DIFF GMT : 05 UTM NORTH: 4508570
DATE ESTABLISHED: 1985/01/01 ELEV MSL : 3 M UTM EAST : 572280
MET SITE: DATE TERMINATED : / / COMP SECT: SW LATITUDE : +40:43:37
SITE ID : - - DATE LAST UPDATE: 1992/05/14 LONGITUDE: -074:08:39
DISTANCE SITE : M HQ EVAL DATE : / /
DIRECTION SITE: REGN EVAL DATE : 1986/05/06
TYPE SITE ( ):

AQCR (043): NEW JERSEY-NEW YORK-CONNECTICUT
CMSA LOCATED IN (0000): ** DESCRIPTION UNKNOWN **
LAND USE (3): INDUSTRIAL
LOCATION SETTING (1): URBAN AND CENTER CITY
MSA LOCATED IN (5640): NEWARK, NJ
SITE COMMENT 1 : NJ #07142,START 1/1/85,RELOC.FROM 340130008, SITTING CRITERIA?
SITE COMMENT 2 : PM10,DICHOT,START 3/15/86,ELEV.16°:03 DOWN 5/16/86-3/25/87
SUPPORTING AGENCY (001): NEW JERSEY STATE DEPARTMENT OF ENVIRONMENTAL PROTEC
URBAN AREA REPRESENTED (5601): NEW YORK, NY-NORTHEASTERN NJ

TANGENT STREET:

STREET #	TRAFFIC FLOW	YR TRAFFIC	DIR	STREET NAME	TYPE ROAD
1	71000				(2): EXPRESSWAY
2	2000				(6): LOCAL ST OR HY

SITE ID: 34-039-5001 ADDRESS: WEST THIRD AND BERGEN STREETS STATE/LOCAL ID:
CITY POPULATION : 45,555 CITY (59190): PLAINFIELD DIST CITY: 042 K UTM ZONE : 18
AQCR POPULATION : 16,525,701 COUNTY (039): UNION CO DIFF GMT : 05 UTM NORTH: 4494399
DATE ESTABLISHED: 1980/05/01 ELEV MSL : 18 M UTM EAST : 547218
MET SITE: DATE TERMINATED : / / COMP SECT: SW LATITUDE : +40:36:03
SITE ID : - - DATE LAST UPDATE: 1991/04/10 LONGITUDE: -074:26:31
DISTANCE SITE : M HQ EVAL DATE : / /
DIRECTION SITE: REGN EVAL DATE : 1990/07/06
TYPE SITE ( ):

AQCR (043): NEW JERSEY-NEW YORK-CONNECTICUT
CMSA LOCATED IN (0000): ** DESCRIPTION UNKNOWN **
LAND USE (1): RESIDENTIAL
LOCATION SETTING (2): SUBURBAN
MSA LOCATED IN (5640): NEWARK, NJ
SITE COMMENT 1 : NJ #20121, SLAMS-NO2,O3 1980 NE OXIDANT STUDY;O3,SO2,NOX
SITE COMMENT 2 : FORMERLY CODED 340351001
SUPPORTING AGENCY (001): NEW JERSEY STATE DEPARTMENT OF ENVIRONMENTAL PROTEC
URBAN AREA REPRESENTED (5601): NEW YORK, NY-NORTHEASTERN NJ

EPA REGION: 02 STATE (34): NEW JERSEY

SITE ID: 34-039-5001
TANGENT STREET:

STREET #	TRAFFIC FLOW	YR TRAFFIC	DIR	STREET NAME	TYPE ROAD
1	1000				(6): LOCAL ST OR HY
2	500				(6): LOCAL ST OR HY

AMP380

AIR QUALITY SUBSYSTEM
SITE DESCRIPTION INVENTORY

EPA REGION: 02 STATE (36): NEW YORK

SITE ID: 36-059-0005 ADDRESS: EISENHOWER PARK,MERRICK AV&OLD COUNTRY R STATE/LOCAL ID:

CITY POPULATION : 1
AQCR POPULATION : 16,525,701

CITY (00000): NOT IN A CITY
COUNTY (059): NASSAU CO
DATE ESTABLISHED: 1971/01/01
DATE TERMINATED : / /
DATE LAST UPDATE: 1993/03/16
HQ EVAL DATE : / /
REGN EVAL DATE : / /

DIST CITY: 033 K
DIFF GMT : 05
ELEV MSL : 27 M
COMP SECT: E

UTM ZONE : 18
UTM NORTH: 4511200
UTM EAST : 619300
LATITUDE : +40:44:43
LONGITUDE: -073:35:13

MET SITE:
SITE ID : - -
DISTANCE SITE : M
DIRECTION SITE:
TYPE SITE (1): ON-SITE MET EQUIP

AQCR (043): NEW JERSEY-NEW YORK-CONNECTICUT
CMSA LOCATED IN (0000): ** DESCRIPTION UNKNOWN **
LAND USE (2): COMMERCIAL
LOCATION SETTING (2): SUBURBAN
MSA LOCATED IN (5380): NASSAU-SUFFOLK, NY
SITE COMMENT 1 : NYS #2950-10 START SO2,CO,O3,NO2,TSP'71,PB'72;NECRMP'80,NO,NO2,O3
SITE COMMENT 2 : O3-#334105002F01 12/82,MIDDLE SCALE,MEETS SITING,NO2-2-025 - 12/86
SUPPORTING AGENCY (001): NEW YORK STATE DEPARTMENT OF ENVIRONMENTAL CONSERVA
URBAN AREA REPRESENTED (5601): NEW YORK, NY-NORTHEASTERN NJ

SITE DESCRIPTION INVENTORY

EPA REGION: 03 STATE (42): PENNSYLVANIA

SITE ID: 42-017-0012 ADDRESS: ROCKVIEW LANE
CITY POPULATION : 10,867 CITY (08760): BRISTOL (BOROUGH)
AQCR POPULATION : 5,487,472 COUNTY (017): BUCKS CO
DATE ESTABLISHED: / /
DATE TERMINATED : / /
DATE LAST UPDATE: 1991/08/15
HQ EVAL DATE : 1988/09/16
REGN EVAL DATE : 1988/09/16

MET SITE:
SITE ID : - -
DISTANCE SITE : M
DIRECTION SITE:
TYPE SITE (1): ON-SITE MET EQUIP

STATE/LOCAL ID:
DIST CITY: K
DIFF GMT : 05
ELEV MSL : 12 M
COMP SECT:
UTM ZONE : 18
UTM NORTH: 4455021
UTM EAST : 500228
LATITUDE : +40:14:51
LONGITUDE: -074:59:50

AQCR (045): METROPOLITAN PHILADELPHIA
CMSA LOCATED IN (0000): ** DESCRIPTION UNKNOWN **
LAND USE (1): RESIDENTIAL
LOCATION SETTING (2): SUBURBAN
MSA LOCATED IN (6160): PHILADELPHIA, PA-NJ
SITE COMMENT 1 : FOR JUNIOR HIGH SCHOOL
SITE COMMENT 2 : P0900501 PA SITE CODE
SUPPORTING AGENCY (001): PENNSYLVANIA DEPARTMENT OF ENVIRONMENTAL RESOURCES
URBAN AREA REPRESENTED (0000): NOT IN AN URBAN AREA

TANGENT STREET:

STREET #	TRAFFIC FLOW	YR TRAFFIC	DIR	STREET NAME	TYPE ROAD
1	500				(6): LOCAL ST OR HY

SITE ID: 42-091-0013 ADDRESS: STATE ARMORY - 1046 BELVOIR RD
CITY POPULATION : 34,684 CITY (54656): NORRISTOWN
AQCR POPULATION : 5,487,472 COUNTY (091): MONTGOMERY CO
DATE ESTABLISHED: / /
DATE TERMINATED : / /
DATE LAST UPDATE: 1991/08/15
HQ EVAL DATE : / /
REGN EVAL DATE : / /

MET SITE:
SITE ID : - -
DISTANCE SITE : M
DIRECTION SITE:
TYPE SITE ( ):

STATE/LOCAL ID:
DIST CITY: K
DIFF GMT : 05
ELEV MSL : 53 M
COMP SECT:
UTM ZONE : 18
UTM NORTH: 4440048
UTM EAST : 473533
LATITUDE : +40:06:44
LONGITUDE: -075:18:38

AQCR (045): METROPOLITAN PHILADELPHIA
CMSA LOCATED IN (0000): ** DESCRIPTION UNKNOWN **
LAND USE (1): RESIDENTIAL
LOCATION SETTING (2): SUBURBAN
MSA LOCATED IN (6160): PHILADELPHIA, PA-NJ
SITE COMMENT 1 : COPAMS REMOTE STATION 013
SUPPORTING AGENCY (001): PENNSYLVANIA DEPARTMENT OF ENVIRONMENTAL RESOURCES
URBAN AREA REPRESENTED (0000): NOT IN AN URBAN AREA

EPA REGION: 03 STATE (42): PENNSYLVANIA

SITE ID: 42-091-0013
TANGENT STREET:

STREET #	TRAFFIC FLOW	YR TRAFFIC	DIR	STREET NAME	TYPE ROAD
1	8500				(4): MAJ ST OR HY

EPA REGION: 06 STATE (48): TEXAS

SITE ID: 48-113-0069 ADDRESS: 1415 HINTON STREET
CITY POPULATION : 904,078 CITY (19000): DALLAS
AQCR POPULATION : 3,257,903 COUNTY (113): DALLAS CO
DATE ESTABLISHED: 1986/01/01
DATE TERMINATED : / /
DATE LAST UPDATE: 1993/10/27
HQ EVAL DATE : / /
REGN EVAL DATE : 1986/12/11

MET SITE:
SITE ID : - -
DISTANCE SITE : M
DIRECTION SITE:
TYPE SITE ( ):

STATE/LOCAL ID:
DIST CITY: K
DIFF GMT : 06
ELEV MSL : 125 M
COMP SECT:
UTM ZONE : 14
UTM NORTH: 3633840
UTM EAST : 699960
LATITUDE : +32:49:34
LONGITUDE: -096:51:50

AQCR (215): METROPOLITAN DALLAS-FORT WORTH
CMSA LOCATED IN (0000): ** DESCRIPTION UNKNOWN **
LAND USE (2): COMMERCIAL
LOCATION SETTING (1): URBAN AND CENTER CITY
MSA LOCATED IN (1920): DALLAS, TX
SITE COMMENT 1 : FORMERLY MOCKINGBIRD SITE 451310044H01
SITE COMMENT 2 : OFFICES MOVED, NEW SITE NEEDED
SUPPORTING AGENCY (002): CITY OF DALLAS AIR POLLUTION CONTROL SECTION
URBAN AREA REPRESENTED (1920): DALLAS-FORT WORTH, TX

TANGENT STREET:

STREET #	TRAFFIC FLOW	YR TRAFFIC	DIR	STREET NAME	TYPE ROAD
1	46076				(4): MAJ ST OR HY

SITE ID: 48-141-0027 ADDRESS: 500 NORTH CAMPBELL ST.
CITY POPULATION : 425,259 CITY (24000): EL PASO
AQCR POPULATION : 660,806 COUNTY (141): EL PASO CO
DATE ESTABLISHED: 1973/01/01
DATE TERMINATED : / /
DATE LAST UPDATE: 1993/10/12
HQ EVAL DATE : / /
REGN EVAL DATE : / /

MET SITE:
SITE ID : - -
DISTANCE SITE : M
DIRECTION SITE:
TYPE SITE ( ):

STATE/LOCAL ID:
DIST CITY: K
DIFF GMT : 07
ELEV MSL : 1140 M
COMP SECT:
UTM ZONE : 13
UTM NORTH: 3514886
UTM EAST : 359179
LATITUDE : +31:45:45
LONGITUDE: -106:29:13

AQCR (153): EL PASO-LAS CRUCES-ALAMOGORDO
CMSA LOCATED IN (0000): ** DESCRIPTION UNKNOWN **
LAND USE (2): COMMERCIAL
LOCATION SETTING (1): URBAN AND CENTER CITY
MSA LOCATED IN (2320): EL PASO, TX
SITE COMMENT 1 : SIP MONITOR
SITE COMMENT 2 : ACTIVE 11/73
SUPPORTING AGENCY (001): TEXAS AIR CONTROL BOARD
URBAN AREA REPRESENTED (2320): EL PASO, TX

SITE DESCRIPTION INVENTORY

EPA REGION: 06 STATE (48): TEXAS

SITE ID: 48-141-0027
TANGENT STREET:

STREET #	TRAFFIC FLOW	YR TRAFFIC	DIR	STREET NAME	TYPE ROAD
1	20000				(4): MAJ ST OR HY
2	25000				(4): MAJ ST OR HY
3	16000				(3): FREEWAY

SITE ID: 48-245-0009 ADDRESS: GEORGIA AT CUNNINGHAM, BEAUMONT, TX
CITY POPULATION : 118,102 CITY (07000): BEAUMONT
AQCR POPULATION : 3,921,588 COUNTY (245): JEFFERSON CO
DATE ESTABLISHED: 1980/01/01
DATE TERMINATED : / /
DATE LAST UPDATE: 1993/10/12
HQ EVAL DATE : / /
REGN EVAL DATE : / /

MET SITE:
SITE ID : - -
DISTANCE SITE : M
DIRECTION SITE:
TYPE SITE ( ):

STATE/LOCAL ID:
DIST CITY: K
DIFF GMT : 06
ELEV MSL : 13 M
COMP SECT:
UTM ZONE : 15
UTM NORTH: 3323462
UTM EAST : 396381
LATITUDE : +30:02:22
LONGITUDE: -094:04:29

AQCR (106): SOUTHERN LOUISIANA-SOUTHEAST TEXAS
CMSA LOCATED IN (0000): ** DESCRIPTION UNKNOWN **
LAND USE (1): RESIDENTIAL
LOCATION SETTING (2): SUBURBAN
MSA LOCATED IN (0840): BEAUMONT-PORT ARTHUR, TX
SITE COMMENT 1 : MOVED FROM VIRGINIA ST
SITE COMMENT 2 : LAMAR UNIVERSITY CAMPUS
SUPPORTING AGENCY (001): TEXAS AIR CONTROL BOARD
URBAN AREA REPRESENTED (0839): BEAUMONT, TX

SITE ID: 49-439-1002 ADDRESS: ROSS AVE BETWEEN LONG AND 34TH ST
CITY POPULATION : 385,164 CITY (27000): FORT WORTH
AQCR POPULATION : 3,257,903 COUNTY (439): TARRANT CO
DATE ESTABLISHED: 1975/01/01
DATE TERMINATED : / /
DATE LAST UPDATE: 1993/10/27
HQ EVAL DATE : 1980/10/28
REGN EVAL DATE : 1980/08/01

MET SITE:
SITE ID : - -
DISTANCE SITE : M
DIRECTION SITE:
TYPE SITE (1): ON-SITE MET EQUIP

STATE/LOCAL ID:
DIST CITY: 006 K
DIFF GMT : 06
ELEV MSL : 204 M
COMP SECT: N
UTM ZONE : 14
UTM NORTH: 3630705
UTM EAST : 653810
LATITUDE : +32:48:19
LONGITUDE: -097:21:26

AQCR (215): METROPOLITAN DALLAS-FORT WORTH
CMSA LOCATED IN (0000): ** DESCRIPTION UNKNOWN **
LAND USE (2): COMMERCIAL
LOCATION SETTING (1): URBAN AND CENTER CITY
MSA LOCATED IN (2800): FORT WORTH-ARLINGTON, TX
SITE COMMENT 1 : CONTINUOUS MONITRING STATION
SUPPORTING AGENCY (001): TEXAS AIR CONTROL BOARD
URBAN AREA REPRESENTED (1920): DALLAS-FORT WORTH, TX

EPA REGION: 06 STATE (48): TEXAS

SITE ID: 48-439-1002
TANGENT STREET:

STREET #	TRAFFIC FLOW	YR TRAFFIC	DIR	STREET NAME	TYPE ROAD
1	100				(6): LOCAL ST OR HY

AIR QUALITY SUBSYSTEM
SITE DESCRIPTION INVENTORY

EPA REGION: 06 STATE (80): COUNTRY OF MEXICO

SITE ID: 80-006-0001 ADDRESS: TECHNICAL INSTITUTE
CITY POPULATION : 355,555
AQCR POPULATION : 34,923,129

CITY (01150): CIUDAD-JUAREZ
COUNTY (006): CHIHUAHUA STATE
DATE ESTABLISHED: 1990/06/04
DATE TERMINATED : / /
DATE LAST UPDATE: 1993/07/01
HQ EVAL DATE : / /
REGN EVAL DATE : / /

STATE/LOCAL ID:
DIST CITY: K
DIFF GMT :
ELEV MSL : M
COMP SECT:

UTM ZONE :
UTM NORTH:
UTM EAST :
LATITUDE : +00:00:00
LONGITUDE: +000:00:00

MET SITE:
SITE ID : - -
DISTANCE SITE : M
DIRECTION SITE:
TYPE SITE ( ):

AQCR (250): COUNTRY OF MEXICO
CMSA LOCATED IN (0000): ** DESCRIPTION UNKNOWN **
LAND USE (2): COMMERCIAL
LOCATION SETTING (1): URBAN AND CENTER CITY
MSA LOCATED IN (2320): EL PASO, TX
SITE COMMENT 1 : SPECIAL EL PASO/JUAREZ MONITORING SITE.
SUPPORTING AGENCY (002): SEDUE
URBAN AREA REPRESENTED (2320): EL PASO, TX

SITE TYPE:
SITE LOCATION TYPE MSA OR CMSA REPRESENTED
(0): ********** DESCRIPTION UNKNOWN **********
(0): ********** DESCRIPTION UNKNOWN **********
(0): ********** DESCRIPTION UNKNOWN **********

APPENDIX B

CRYOGENIC PRECONCENTRATION AND DIRECT FLAME IONIZATION DETECTION METHOD

METHOD TO-12

METHOD FOR THE DETERMINATION OF NON-METHANE ORGANIC COMPOUNDS (NMOC) IN AMBIENT AIR USING CRYOGENIC PRECONCENTRATION AND DIRECT FLAME IONIZATION DETECTION (PDFID)

1. Scope

1.1 In recent years, the relationship between ambient concentrations of precursor organic compounds and subsequent downwind concentrations of ozone has been described by a variety of photochemical dispersion models. The most important application of such models is to determine the degree of control of precursor organic compounds that is necessary in an urban area to achieve compliance with applicable ambient air quality standards for ozone (1,2).

1.2 The more elaborate theoretical models generally require detailed organic species data obtained by multicomponent gas chromatography (3). The Empirical Kinetic Modeling Approach (EKMA), however, requires only the total non-methane organic compound (NMOC) concentration data; specifically, the average total NMOC concentration from 6 a.m. to 9 a.m. daily at the sampling location. The use of total NMOC concentration data in the EKMA substantially reduces the cost and complexity of the sampling and analysis system by not requiring qualitative and quantitative species identification.

1.3 Method TO1, "Method for The Determination of Volatile Organic Compounds in Ambient Air Using Tenax® Adsorption and Gas Chromatography/Mass Spectrometry (GC/MS)", employs collection of certain volatile organic compounds on Tenax® GC with subsequent analysis of thermal desorption/cryogenic preconcentration and GC/MS identification. This method (TO12) combines the same type of cryogenic concentration techniques used in Method TO1 for high sensitivity with the simple flame ionization detector (FID) of the GC for total NMOC measurements, without the GC columns and complex procedures necessary for species separation.

1.4 In a flame ionization detector, the sample is injected into a hydrogen-rich flame where the organic vapors burn producing ionized molecular fragments. The resulting ion fragments are then collected and detected. The FID is nearly a universal detector. However, the detector response varies with the species of [functional group in] the organic compound in an oxygen atmosphere. Because this method employs a helium or argon carrier gas, the detector response is nearly one for all compounds. Thus, the historical short-coming of the FID involving varying detector response to different organic functional groups is minimized.

1.5 The method can be used either for direct, in situ ambient measurements or (more commonly) for analysis of integrated samples collected in specially treated stainless steel canisters. EKMA models generally require 3-hour integrated NMOC measurements over the 6 a.m. to 9 a.m. period and are used by State or local agencies to prepare State Implementation Plans (SIPs) for ozone control to achieve compliance with the National Ambient Air Quality Standards (NAAQS) for ozone. For direct, in situ ambient measurements, the analyst must be present during the 6 a.m. to 9 a.m. period, and repeat measurements (approximately six per hour) must be taken to obtain the 6 a.m. to 9 a.m. average NMOC concentration. The use of sample canisters allows the collection of integrated air samples over the 6 a.m. to 9 a.m. period by unattended, automated samplers. This method has incorporated both sampling approaches.

2. Applicable Documents

2.1 ASTM Standards

D1356 - Definition of Terms Related to Atmospheric Sampling and Analysis

E260 - Recommended Practice for General Gas Chromatography Procedures

E355 - Practice for Gas Chromatography Terms and Relationships

2.2 Other Documents

U. S. Environmental Protection Agency Technical Assistance Documents (4,5)

Laboratory and Ambient Air Studies (6-10)

3. Summary of Method

3.1 A whole air sample is either extracted directly from the ambient air and analyzed on site by the GC system or collected into a precleaned sample canister and analyzed off site.

3.2 The analysis requires drawing a fixed-volume portion of the sample air at a low flow rate through a glass-bead filled trap that is cooled to approximately -186°C with liquid argon. The cryogenic trap simultaneously collects and concentrates the NMOC (either via condensation or adsorption) while allowing the methane, nitrogen, oxygen, etc. to pass through the trap without retention. The system is dynamically calibrated so that the volume of sample passing through the trap does not have to be quantitatively measured, but must be precisely repeatable between the calibration and the analytical phases.

3.3 After the fixed-volume air sample has been drawn through the trap, a helium carrier gas flow is diverted to pass through the trap, in the opposite direction to the sample flow, and into an FID. When the residual air and methane have been flushed from the trap and the FID baseline restablizes, the cryogen is removed and the temperature of the trap is raised to approximately 90°C.

3.4 The organic compounds previously collected in the trap revolatilize due to the increase in temperature and are carried into the FID, resulting in a response peak or peaks from the FID. The area of the peak or peaks is integrated, and the integrated value is translated to concentration units via a previously-obtained calibration curve relating integrated peak areas with known concentrations of propane.

3.5 By convention, concentrations of NMOC are reported in units of parts per million carbon (ppmC), which, for a specified compound, is the concentration of volume (ppmV) multiplied by the number of carbon atoms in the compound.

3.6 The cryogenic trap simultaneously concentrates the NMOC while separating and removing the methane from air samples. The technique is thus direct reading for NMOC and, because of the concentration step, is more sensitive than conventional continuous NMOC analyzers.

4. Significance

4.1 Accurate measurements of ambient concentrations of NMOC are important for the control of photochemical smog because these organic compounds are primary precursors of atmospheric ozone and other oxidants. Achieving and maintaining compliance with the NAAQS for ozone thus depends largely on control of ambient levels of NMOC.

4.2 The NMOC concentrations typically found at urban sites may range up to 5-7 ppmC or higher. In order to determine transport of precursors into an area, measurement of NMOC upwind of the area may be necessary. Upwind NMOC concentrations are likely to be less than a few tenths of 1 ppm.

4.3 Conventional methods that depend on gas chromatography and qualitative and quantitative species evaluation are excessively difficult and expensive to operate and maintain when speciated measurements are not needed. The method described here involves a simple, cryogenic preconcentration procedure with subsequent, direct, flame ionization detection. The method is sensitive and provides accurate measurements of ambient NMOC concentrations where speciated data are not required as applicable to the EKMA.

5. Definitions

[Note: Definitions used in this document and in any user-prepared Standard Operating Procedures (SOPs) should be consistent with ASTM Methods D1356 and E355. All abbreviations and symbols are defined within this document at point of use.]

5.1 Absolute pressure - Pressure measured with reference to absolute zero pressure (as opposed to atmospheric pressure), usually expressed as pounds-force per square inch absolute (psia).

5.2 Cryogen - A substance used to obtain very low trap temperatures in the NMOC analysis system. Typical cryogens are liquid argon (bp-185.7) and liquid oxygen (bp-183.0).

5.3 Dynamic calibration - Calibration of an analytical system with pollutant concentrations that are generated in a dynamic, flowing system, such as by quantitative, flow-rate dilution of a high concentration gas standard with zero gas.

5.4 EKMA - Empirical Kinetics Modeling Approach; an empirical model that attempts to relate morning ambient concentrations of non-methane organic compounds (NMOC) and NO_x with subsequent peak, downwind ambient ozone concentrations; used by pollution control agencies to estimate the degree of hydrocarbon emission reduction needed to achieve compliance with national ambient air quality standards for ozone.

5.5 Gauge pressure - Pressure measured with reference to atmospheric pressure (as opposed to absolute pressure). Zero gauge pressure (0 psig) is equal to atmospheric pressure, or 14.7 psia (101 kPa).

5.6 <u>In situ</u> - In place; <u>In situ</u> measurements are obtained by direct, on-the-spot analysis, as opposed to subsequent, remote analysis of a collected sample.

5.7 Integrated sample - A sample obtained uniformly over a specified time period and representative of the average levels of pollutants during the time period.

5.8 NMOC - Nonmethane organic compounds; total organic compounds as measured by a flame ionization detector, excluding methane.

5.9 ppmC - Concentration unit of parts per million carbon; for a specific compound, ppmC is equivalent to parts per million by volume (ppmv) multiplied by the number of carbon atoms in the compound.

5.10 Sampling - The process of withdrawing or isolating a representative portion of an ambient atmosphere, with or without the simultaneous isolation of selected components for subsequent analysis.

6. Interferences

6.1 In field and laboratory evaluation, water was found to cause a positive shift in the FID baseline. The effect of this shift is minimized by carefully selecting the integration termination point and adjusted baseline used for calculating the area of the NMOC peak(s).

6.2 When using helium as a carrier gas, FID response is quite uniform for most hydrocarbon compounds, but the response can vary considerably for other types of organic compounds.

7. Apparatus

7.1 Direct Air Sampling (Figure 1)

7.1.1 Sample manifold or sample inlet line - to bring sample air into the analytical system.

7.1.2 Vacuum pump or blower - to draw sample air through a sample manifold or long inlet line to reduce inlet residence time. Maximum residence time should be no greater than 1 minute.

7.2 Remote Sample Collection in Pressurized Canisters (Figure 2)

7.2.1 Sample canister(s) - stainless steel, Summa®-polished vessel(s) of 4-6 L capacity (Scientific Instrumentation Specialists, Inc., P.O. Box 8941, Moscow, ID 83843), used for automatic collection of 3-hour integrated field air samples. Each canister should have a unique identification number stamped on its frame.

7.2.2 Sample pump - stainless steel, metal bellows type (Model MB-151, Metal Bellows Corp., 1075 Providence Highway, Sharon, MA 02067) capable of 2 atmospheres minimum output pressure. Pump must be free of leaks, clean, and uncontaminated by oil or organic compounds.

7.2.3 Pressure gauge - 0-30 psig (0-240 kPa).

7.2.4 Solenoid valve - special electrically-operated, bistable solenoid valve (Skinner Magnelatch Valve, New Britain, CT), to control sample flow to the canister with negligible temperature rise (Figure 3). The use of the Skinner Magnelatch valve avoids any substantial temperature rise that would occur with a conventional, normally closed solenoid valve, which would have to be energized during the entire sample period. This temperature rise in the valve could cause outgasing of organics from the Viton valve seat material. The Skinner Magnelatch valve requires only a brief electrical pulse to open or close at the appropriate

start and stop times and therefore experiences no temperature increase. The pulses may be obtained with an electronic timer that can be programmed for short (5 to 60 seconds) ON periods or with a conventional mechanical timer and a special pulse circuit. Figure 3[a] illustrates a simple electrical pulse circuit for operating the Skinner Magnelatch solenoid valve with a conventional mechanical timer. However, with this simple circuit, the valve may operate unpredictably during brief power interruptions or if the time is manually switched on and off too fast. A better circuit incorporating a time-delay relay to provide more reliable valve operation is shown in Figure 3[b].

7.2.5 Stainless steel orifice (or short capillary) - capable of maintaining a substantially constant flow over the sampling period (see Figure 4).

7.2.6 Particulate matter filter - 2 micron stainless steel sintered in-line type (see Figure 4).

7.2.7 Timer - used for unattended sample collection. Capable of controlling pump(s) and solenoid valve.

7.3 Sample Canister Cleaning (Figure 5)

7.3.1 Vacuum pump - capable of evacuating sample canister(s) to an absolute pressure of <5 mm Hg.

7.3.2 Manifold - stainless steel manifold with connections for simultaneously cleaning several canisters.

7.3.3 Shut off valve(s) - seven required.

7.3.4 Vacuum gauge - capable of measuring vacuum in the manifold to an absolute pressure of 5 mm Hg or less.

7.3.5 Cryogenic trap (2 required) - U-shaped open tubular trap cooled with liquid nitrogen or argon used to prevent contamination from back diffusion of oil from vacuum pump, and to provide clean, zero air to sample canister(s).

7.3.6 Pressure gauge - 0-50 psig (0-345 kPa), to monitor zero air pressure.

7.3.7 Flow control valve - to regulate flow of zero air into canister(s).

7.3.8 Humidifier - water bubbler or other system capable of providing moisture to the zero air supply.

7.4 Analytical System (Figure 1)

7.4.1 FID detector system - including flow controls for the FID fuel and air, temperature control for the FID, and signal processing electronics. The FID burner air,

hydrogen, and helium carrier flow rates should be set according to the manufacturer's instructions to obtain an adequate FID response while maintaining as stable a flame as possible throughout all phases of the analytical cycle.

7.4.2 Chart recorder - compatible with the FID output signal, to record FID response.

7.4.3 Electronic integrator - capable of integrating the area of one or more FID response peaks and calculating peak area corrected for baseline drift. If a separate integrator and chart recorder are used, care must be exercised to be sure that these components do not interfere with each other electrically. Range selector controls on both the integrator and the FID analyzer may not provide accurate range ratios, so individual calibration curves should be prepared for each range to be used. The integrator should be capable of marking the beginning and ending of peaks, constructing the appropriate baseline between the start and end of the integration period, and calculating the peak area.

Note: The FID (7.4.1), chart recorder (7.4.2), integrator (7.4.3), valve heater (7.4.5), and a trap heating system are conveniently provided by a standard laboratory chromatograph and associated integrator. EPA has adapted two such systems for the PDFID method: a Hewlett-Packard model 5880 (Hewlett-Packard Corp., Avondale, PA) and a Shimadzu model GC8APF (Shimadzu Scientific Instruments Inc., Columbia, MD; see Reference 5). Other similar systems may also be applicable.

7.4.4 Trap - the trap should be carefully constructed from a single piece of chromatographic-grade stainless steel tubing (0.32 cm O.D, 0.21 cm I.D.) as shown in Figure 6. The central portion of the trap (7-10 cm) is packed with 60/80 mesh glass beads, with small glass wool (dimethyldichlorosilane-treated) plugs to retain the beads. The trap must fit conveniently into the Dewar flask (7.4.9), and the arms must be of an appropriate length to allow the beaded portion of the trap to be submerged below the level of liquid cryogen in the Dewar. The trap should connect directly to the six-port valve, if possible, to minimize line length

between the trap and the FID. The trap must be mounted to allow the Dewar to be slipped conveniently on and off the trap and also to facilitate heating of the trap (see 7.4.13).

7.4.5 Six-port chromatographic valve - Seiscor Model VIII (Seismograph Service Corp., Tulsa, OK), Valco Model 9110 (Valco Instruments Co., Houston, TX), or equivalent. The six-port valve and as much of the interconnecting tubing as practical should be located inside an oven or otherwise heated to 80 - 90°C to minimize wall losses or adsorption/desorption in the connecting tubing. All lines should be as short as practical.

7.4.6 Multistage pressure regulators - standard two-stage, stainless steel diaphram regulators with pressure gauges, for helium, air, and hydrogen cylinders.

7.4.7 Pressure regulators - optional single stage, stainless steel, with pressure gauge, if needed, to maintain constant helium carrier and hydrogen flow rates.

7.4.8 Fine needle valve - to adjust sample flow rate through trap.

7.4.9 Dewar flask - to hold liquid cryogen to cool the trap, sized to contain submerged portion of trap.

7.4.10 Absolute pressure gauge - 0-450 mm Hg, (2 mm Hg [scale divisions indicating units]), to monitor repeatable volumes of sample air through cryogenic trap (Wallace and Tiernan, Model 61C-ID-0410, 25 Main Street, Belleville, NJ).

7.4.11 Vacuum reservoir - 1-2 L capacity, typically 1 L.

7.4.12 Gas purifiers - gas scrubbers containing Drierite® or silica gel and 5A molecular sieve to remove moisture and organic impurities in the helium, air, and hydrogen gas flows (Alltech Associates, Deerfield, IL). Note: Check purity of gas purifiers prior to use by passing zero-air through the unit and analyzing according to Section 11.4. Gas purifiers are clean if produce [contain] less than 0.02 ppmC hydrocarbons.

7.4.13 Trap heating system - chromatographic oven, hot water, or other means to heat the trap to 80° to 90°C. A simple heating source for the trap is a beaker or Dewar filled with water maintained at 80-90°C. More repeatable types of heat sources are recommended, including a temperature-programmed chromatograph oven,

electrical heating of the trap itself, or any type of heater that brings the temperature of the trap up to 80-90°C in 1-2 minutes.

7.4.14 Toggle shut-off valves (2) - leak free, for vacuum valve and sample valve.

7.4.15 Vacuum pump - general purpose laboratory pump capable of evacuating the vacuum reservoir to an appropriate vacuum that allows the desired sample volume to be drawn through the trap.

7.4.16 Vent - to keep the trap at atmospheric pressure during trapping when using pressurized canisters.

7.4.17 Rotameter - to verify vent flow.

7.4.18 Fine needle valve (optional) - to adjust flow rate of sample from canister during analysis.

7.4.19 Chromatographic-grade stainless steel tubing (Alltech Applied Science, 2051 Waukegan Road, Deerfield, IL, 60015, (312) 948-8600) and stainless steel plumbing fittings - for interconnections. All such materials in contact with the sample, analyte, or support gases prior to analysis should be stainless steel or other inert metal. Do not use plastic or Teflon® tubing or fittings.

7.5 Commercially Available PDFID System (5)

7.5.1 A convenient and cost-effective modular PDFID system suitable for use with a conventional laboratory chromatograph is commercially available (NuTech Corporation, Model 8548, 2806 Cheek Road, Durham, NC, 27704, (919) 682-0402).

7.5.2 This modular system contains almost all of the apparatus items needed to convert the chromatograph into a PDFID analytical system and has been designed to be readily available and easy to assemble.

8. Reagents and Materials

8.1 Gas cylinders of helium and hydrogen - ultrahigh purity grade.

8.2 Combustion air - cylinder containing less than 0.02 ppm hydrocarbons, or equivalent air source.

8.3 Propane calibration standard - cylinder containing 1-100 ppm (3-300 ppmC) propane in air. The cylinder assay should be traceable to a National Bureau of Standards (NBS) Standard Reference Material (SRM) or to a NBS/EPA-approved Certified Reference Material (CRM).

8.4 Zero air - cylinder containing less than 0.02 ppmC hydrocarbons. Zero air may be obtained from a cylinder of zero-grade compressed

air scrubbed with Drierite® or silica gel and 5A molecular sieve or activated charcoal, or by catalytic cleanup of ambient air. All zero air should be passed through a liquid argon cold trap for final cleanup, then passed through a hydrocarbon-free water bubbler (or other device) for humidification.

8.5 Liquid cryogen - liquid argon (bp -185.7°C) or liquid oxygen, (bp -183°C) may be used as the cryogen. Experiments have shown no differences in trapping efficiency between liquid argon and liquid oxygen. However, appropriate safety precautions must be taken if liquid oxygen is used. Liquid nitrogen (bp -195°C) should not be used because it causes condensation of oxygen and methane in the trap.

9. Direct Sampling

9.1 For direct ambient air sampling, the cryogenic trapping system draws the air sample directly from a pump-ventilated distribution manifold or sample line (see Figure 1). The connecting line should be of small diameter (1/8" O.D.) stainless steel tubing and as short as possible to minimize its dead volume.

9.2 Multiple analyses over the sampling period must be made to establish hourly or 3-hour NMOC concentration averages.

10. Sample Collection in Pressurized Canister(s)

For integrated pressurized canister sampling, ambient air is sampled by a metal bellows pump through a critical orifice (to maintain constant flow), and pressurized into a clean, evacuated, Summa®-polished sample canister. The critical orifice size is chosen so that the canister is pressurized to approximately one atmosphere above ambient pressure, at a constant flow rate over the desired sample period. Two canisters are connected in parallel for duplicate samples. The canister(s) are then returned to the laboratory for analysis, using the PDFID analytical system. Collection of ambient air samples in pressurized canisters provides the following advantages:

- Convenient integration of ambient samples over a specific time period
- Capability of remote sampling with subsequent central laboratory analysis
- Ability to ship and store samples, if necessary
- Unattended sample collection
- Analysis of samples from multiple sites with one analytical system
- Collection of replicate samples for assessment of measurement precision

With canister sampling, however, great care must be exercised in selecting, cleaning, and handling the sample canister(s) and sampling apparatus to avoid losses or contamination of the samples.

10.1 Canister Cleanup and Preparation

10.1.1 All canisters must be clean and free of any contaminants before sample collection.

10.1.2 Leak test all canisters by pressurizing them to approximately 30 psig [200 kPa (gauge)] with zero air. The use of the canister cleaning system (see Figure 5) may be adequate for this task. Measure the final pressure - close the canister valve, then check the pressure after 24 hours. If leak tight, the pressure should not vary more than ± 2 psig over the 24-hour period. Note leak check result on sampling data sheet, Figure 7.

10.1.3 Assemble a canister cleaning system, as illustrated in Figure 5. Add cryogen to both the vacuum pump and zero air supply traps. Connect the canister(s) to the manifold. Open the vent shut off valve and the canister valve(s) to release any remaining pressure in the canister. Now close the vent shut off valve and open the vacuum shut off valve. Start the vacuum pump and evacuate the canister(s) to ≤ 5.0 mm Hg (for at least one hour). [Note: On a daily basis or more often if necessary, blow-out the cryogenic traps with zero air to remove any trapped water from previous canister cleaning cycles.]

10.1.4 Close the vacuum and vacuum gauge shut off valves and open the zero air shut off valve to pressurize the canister(s) with moist zero air to approximately 30 psig [200 kPa (gauge)]. If a zero gas generator systems is used, the flow rate may need to be limited to maintain the zero air quality.

10.1.5 Close the zero shut off valve and allow canister(s) to vent down to atmospheric pressure through the vent shut off valve. Close the vent shut off valve. Repeat steps 10.1.3 through 10.1.5 two additional times for a total of three (3) evacuation/ pressurization cycles for each set of canisters.

10.1.6 As a "blank" check of the canister(s) and cleanup procedure, analyze the final zero-air fill of 100% of the canisters until the cleanup system and canisters are proven reliable. The check can then be reduced to a lower percentage of canisters. Any canister that does not test clean (compared to direct analysis of

humidified zero air of less than 0.02 ppmC) should not be utilized.

10.1.7 The canister is then re-evacuated to ≤ 5.0 mm Hg, using the canister cleaning system, and remains in this condition until use. Close the canister valve, remove the canister from the canister cleaning system and cap canister connection with a stainless steel fitting. The canister is now ready for collection of an air sample. Attach an identification tag to the neck of each canister for field notes and chain-of-custody purposes.

10.2 Collection of Integrated Whole-Air Samples

10.2.1 Assemble the sampling apparatus as shown in Figure 2. The connecting lines between the sample pump and the canister(s) should be as short as possible to minimize their volume. A second canister is used when a duplicate sample is desired for quality assurance (QA) purposes (see Section 12.2.4). The small auxiliary vacuum pump purges the inlet manifold or lines with a flow of several L/min to minimize the sample residence time. The larger metal bellows pump takes a small portion of this sample to fill and pressurize the sample canister(s). Both pumps should be shock-mounted to minimize vibration. Prior to field use, each sampling system should be leak tested. The outlet side of the metal bellows pump can be checked for leaks by attaching the 0-30 psig pressure gauge to the canister(s) inlet via connecting tubing and pressurizing to 2 atmospheres or approximately 29.4 psig. If pump and connecting lines are leak free pressure should remain at ±2 psig for 15 minutes. To check the inlet side, plug the sample inlet and insure that there is no flow at the outlet of the pump.

10.2.2 Calculate the flow rate needed so that the canister(s) are pressurized to approximately one atmosphere above ambient pressure (2 atmospheres absolute pressure) over the desired sample period, utilizing the following equation:

$$F = \frac{(P)(V)(N)}{(T)(60)}$$

where:

F = flow rate (cm^3/min)

P = final canister pressure (atmospheres absolute) = (Pg/Pa) + 1

V = volume of the canister (cm^3)

N = number of canisters connected together for simultaneous sample collection

T = sample period (hours)

Pg = gauge pressure in canister, psig (kPa)

Pa = standard atmospheric pressure, 14.7 psig (101 kPa)

For example, if one 6-L canister is to be filled to 2 atmospheres absolute pressure (14.7 psig) in 3 hours, the flow rate would be calculated as follows:

$$F = \frac{2 \times 6000 \times 1}{3 \times 60} = 67 \text{ cm}^3/\text{min}$$

10.2.3 Select a critical orifice or hypodermic needle suitable to maintain a substantially constant flow at the calculated flow rate into the canister(s) over the desired sample period. A 30-gauge hypodermic needle, 2.5 cm long, provides a flow of approximately 65 cm^3/min with the Metal Bellows Model MBV-151 pump (see Figure 4). Such a needle will maintain approximately constant flow up to a canister pressure of about 10 psig (71 kPa), after which the flow drops with increasing pressure. At 14.7 psig (2 atmospheres absolute pressure), the flow is about 10% below the original flow.

10.2.4 Assemble the 2.0 micron stainless steel in-line particulate filter and position it in front of the critical orifice. A suggested filter-hypodermic needle assembly can be fabricated as illustrated in Figure 4.

10.2.5 Check the sampling system for contamination by filling two evacuated, cleaned canister(s) (See Section 10.1) with humidified zero air through the sampling system. Analyze the canisters according to Section 11.4. The sampling system is free of contamination if the canisters contain less than 0.02 ppmC hydrocarbons, similar to that of humidified zero air.

10.2.6 During the system contamination check procedure, check the critical orifice flow rate on the sampling system to insure that sample flow rate remains relatively constant (±10%) up to about 2 atmospheres absolute pressure (101 kpa). Note: A drop in the flow rate may occur near the end of the sampling period as the canister pressure approaches two atmospheres.

10.2.7 Reassemble the sampling system. If the inlet sample line is longer than 3 meters, install an auxiliary pump to ventilate the sample line, as illustrated in Figure 2.

10.2.8 Verify that the timer, pump(s) and solenoid valve are connected and operating properly.

10.2.9 Verify that the timer is correctly set for the desired sample period, and that the solenoid valve is closed.

10.2.10 Connect a cleaned, evacuated canister(s) (Section 10.1) to the non-contaminated sampling system, by way of the solenoid valve, for sample collection.

10.2.11 Make sure the solenoid valve is closed. Open the canister valve(s). Temporarily connect a small rotameter to the sample inlet to verify that there is no flow. Note: Flow detection would indicate a leaking (or open) solenoid valve. Remove the rotameter after leak detection procedure.

10.2.12 Fill out the necessary information on the Field Data Sheet (Figure 7).

10.2.13 Set the automatic timer to start and stop the pump or pumps to open and close the solenoid valve at the appropriate time for the intended sample period. Sampling will begin at the pre-determined time.

10.2.14 After the sample period, close the canister valve(s) and disconnect the canister(s) from the sampling system. Connect a pressure gauge to the canister(s) and briefly open and close the canister valve. Note the canister pressure on the Field Data Sheet (see Figure 7). The canister pressure should be approximately 2 atmospheres absolute [1 atmosphere or 101 kPa (gauge)]. Note: If the canister pressure is not approximately 2 atmospheres absolute (14.7 psig), determine and correct the cause before next sample. Re-cap canister valve.

10.2.15 Fill out the identification tag on the sample canister(s) and complete the Field Data Sheet as

necessary. Note any activities or special conditions in the area (rain, smoke, etc.) that may affect the sample contents on the sampling data sheet.

10.2.16 Return the canister(s) to the analytical system for analysis.

11. Sample Analysis

11.1 Analytical System Leak Check

11.1.1 Before sample analysis, the analytical system is assembled (see Figure 1) and leak checked.

11.1.2 To leak check the analytical system, place the six-port gas valve in the trapping position. Disconnect and cap the absolute pressure gauge. Insert a pressure gauge capable of recording up to 60 psig at the vacuum valve outlet.

11.1.3 Attach a valve and a zero air supply to the sample inlet port. Pressurize the system to about 50 psig (350 kPa) and close the valve.

11.1.4 Wait approximately 3 hrs. and re-check pressure. If the pressure did not vary more than ± 2 psig, the system is considered leak tight.

11.1.5 If the system is leak free, de-pressurize and reconnect absolute pressure gauge.

11.1.6 The analytical system leak check procedure needs to be performed during the system checkout, during a series of analysis or if leaks are suspected. This should be part of the user-prepared SOP manual (see Section 12.1).

11.2 Sample Volume Determination

11.2.1 The vacuum reservoir and absolute pressure gauge are used to meter a precisely repeatable volume of sample air through the cryogenically-cooled trap, as follows: With the sample valve closed and the vacuum valve open, the reservoir is first evacuated with the vacuum pump to a predetermined pressure (e.g., 100 mm Hg). Then the vacuum valve is closed and the sample valve is opened to allow sample air to be drawn through the cryogenic trap and into the evacuated reservoir until a second predetermined reservoir pressure is reached (e.g., 300 mm Hg). The (fixed) volume of air thus sampled is determined by the pressure rise in the vacuum reservoir (difference between the predetermined pressures) as measured by the absolute pressure gauge (see Section 12.2.1).

11.2.2 The sample volume can be calculated by:

$$V_s = \frac{(\Delta P)(V_r)}{(P_s)}$$

where:

V_s = volume of air sampled (standard cm^3)

ΔP = pressure difference measured by gauge (mm Hg)

V_r = volume of vacuum reservoir (cm^3) usually 1 L

P_s = standard pressure (760 mm Hg)

For example, with a vacuum reservoir of 1000 cm^3 and a pressure change of 200 mm Hg (100 to 300 mm Hg), the volume sampled would be 263 cm^3. [Note: Typical sample volume using this procedure is between 200-300 cm^3.]

11.2.3 The sample volume determination need only be performed once during the system check-out and shall be part of the user-prepared SOP Manual (see Section 12.1).

11.3 Analytical System Dynamic Calibration

11.3.1 Before sample analysis, a complete dynamic calibration of the analytical system should be carried out at five or more concentrations on each range to define the calibration curve. This should be carried out initially and periodically thereafter [may be done only once during a series of analyses]. This should be part of the user-prepared SOP Manual (See Section 12.1). The calibration should be verified with two or three-point calibration checks (including zero) each day the analytical system is used to analyze samples.

11.3.2 Concentration standards of propane are used to calibrate the analytical system. Propane calibration standards may be obtained directly from low concentration cylinder standards or by dilution of high concentration cylinder standards with zero air (see Section 8.3). Dilution flow rates must be measured accurately, and the combined gas stream must be mixed thoroughly for successful calibration of the analyzer. Calibration standards should be sampled directly from a vented manifold or tee. Note: Remember that a propane NMOC concentration in ppmC is three times the volumetric concentration in ppm.

11.3.3 Select one or more combinations of the following parameters to provide the desired range or ranges (e.g., 0-1.0 ppmC or 0-5.0 ppmC): FID attenuator setting, output voltage setting, integrator resolution (if applicable), and sample volume. Each individual range should be calibrated separately and should have a separate calibration curve. Note: Modern GC integrators may provide automatic ranging such that several decades of concentration may be covered in a single range. The user-prepared SOP manual should address variations applicable to a specific system design (see Section 12.1).

11.3.4 Analyze each calibration standard three times according to the procedure in Section 11.4. Insure that flow rates, pressure gauge start and stop readings, initial cryogen liquid level in the Dewar, timing, heating, integrator settings, and other variables are the same as those that will be used during analysis of ambient samples. Typical flow rates for the gases are: hydrogen, 30 cm^3/minute; helium carrier, 30 cm^3/minute; burner air, 400 cm^3/minute.

11.3.5 Average the three analyses for each concentration standard and plot the calibration curve(s) as average integrated peak area reading versus concentration in ppmC. The relative standard deviation for the three analyses should be less than 3% (except for zero concentration). Linearity should be expected; points that appear to deviate abnormally should be repeated. Response has been shown to be linear over a wide range (0-10,000 ppbC). If nonlinearity is observed, an effort should be made to identify and correct the problem. If the problem cannot be corrected, additional points in the nonlinear region may be needed to define the calibration curve adequately.

11.4 Analysis Procedure

11.4.1 Insure the analytical system has been assembled properly, leaked checked, and properly calibrated through a dynamic standard calibration. Light the FID detector and allow to stabilize.

11.4.2 Check and adjust the helium carrier pressure to provide the correct carrier flow rate for the system. Helium is used to purge residual air and methane from

the trap at the end of the sampling phase and to carry the re-volatilized NMOC from the trap into the FID. A single-stage auxiliary regulator between the cylinder and the analyzer may not be necessary, but is recommended to regulate the helium pressure better than the multistage cylinder regulator. When an auxiliary regulator is used, the secondary stage of the two-stage regulator must be set at a pressure higher than the pressure setting of the single-stage regulator. Also check the FID hydrogen and burner air flow rates (see 11.3.4).

11.4.3 Close the sample valve and open the vacuum valve to evacuate the vacuum reservoir to a specific predetermined valve (e.g., 100 mm Hg).

11.4.4 With the trap at room temperature, place the six-port valve in the inject position.

11.4.5 Open the sample valve and adjust the sample flow rate needle valve for an appropriate trap flow of 50-100 cm^3/min. Note: The flow will be lower later, when the trap is cold.

11.4.6 Check the sample canister pressure before attaching it to the analytical system and record on Field Data Sheet (see Figure 7). Connect the sample canister or direct sample inlet to the six-port valve, as shown in Figure 1. For a canister, either the canister valve or an optional fine needle valve installed between the canister and the vent is used to adjust the canister flow rate to a value slightly higher than the trap flow rate set by the sample flow rate needle valve. The excess flow exhausts through the vent, which assures that the sample air flowing through the trap is at atmospheric pressure. The vent is connected to a flow indicator such as a rotameter as an indication of vent flow to assist in adjusting the flow control valve. Open the canister valve and adjust the canister valve or the sample flow needle valve to obtain a moderate vent flow as indicated by the rotameter. The sample flow rate will be lower (and hence the vent flow rate will be higher) when the trap is cold.

11.4.7 Close the sample valve and open the vacuum valve (if not already open) to evacuate the vacuum reservoir. With the six-port valve in the inject position and the

vacuum valve open, open the sample valve for 2-3 minutes [with both valves open, the pressure reading won't change] to flush and condition the inlet lines.

11.4.8 Close the sample valve and evacuate the reservoir to the predetermined sample starting pressure (typically 100 mm Hg) as indicated by the absolute pressure gauge.

11.4.9 Switch the six-port valve to the sample position.

11.4.10 Submerge the trap in the cryogen. Allow a few minutes for the trap to cool completely (indicated when the cryogen stops boiling). Add cryogen to the initial level used during system dynamic calibration. The level of the cryogenic liquid should remain constant with respect to the trap and should completely cover the beaded portion of the trap.

11.4.11 Open the sample valve and observe the increasing pressure on the pressure gauge. When it reaches the specific predetermined pressure (typically 300 mm Hg) representative of the desired sample volume (Section 11.2), close the sample valve.

11.4.12 Add a little cryogen or elevate the Dewar to raise the liquid level to a point slightly higher (3-15 mm) than the initial level at the beginning of the trapping. Note: This insures that organics do not bleed from the trap and are counted as part of the NMOC peak(s).

11.4.13 Switch the 6-port valve to the inject position, keeping the cryogenic liquid on the trap until the methane and upset peaks have diminished (10-20 seconds). Now close the canister valve to conserve the remaining sample in the canister.

11.4.14 Start the integrator and remove the Dewar flask containing the cryogenic liquid from the trap.

11.4.15 Close the GC oven door and allow the GC oven (or alternate trap heating system) to heat the trap at a predetermined rate (typically, 30°C/min) to 90°. Heating the trap volatilizes the concentrated NMOC such that the FID produces integrated peaks. A uniform trap temperature rise rate (above 0°C) helps to reduce variability and facilitates more accurate correction for the moisture-shifted baseline. With a chromatograph oven to heat the trap, the following parameters have been found to be acceptable: initial temperature, 30°C; initial time, 0.20 minutes

(following start of the integrator); heat rate, 30°/minute; final temperature, 90°C.

11.4.16 Use the same heating process and temperatures for both calibration and sample analysis. Heating the trap too quickly may cause an initial negative response that could hamper accurate integration. Some initial experimentation may be necessary to determine the optimal heating procedure for each system. Once established, the procedure should be consistent for each analysis as outlined in the user-prepared SOP Manual.

11.4.17 Continue the integration (generally, in the range of 1-2 minutes is adequate) only long enough to include all of the organic compound peaks and to establish the end point FID baseline, as illustrated in Figure 8. The integrator should be capable of marking the beginning and ending of peaks, constructing the appropriate operational baseline between the start and end of the integration period, and calculating the resulting corrected peak area. This ability is necessary because the moisture in the sample, which is also concentrated in the trap, will cause a slight positive baseline shift. This baseline shift starts as the trap warms and continues until all of the moisture is swept from the trap, at which time the baseline returns to its normal level. The shift always continues longer than the ambient organic peak(s). The integrator should be programmed to correct for this shifted baseline by ending the integration at a point after the last NMOC peak and prior to the return of the shifted baseline to normal (see Figure 8) so that the calculated operational baseline effectively compensates for the water-shifted baseline. Electronic integrators either do this automatically or they should be programmed to make this correction. Alternatively, analyses of humidified zero air prior to sample analyses should be performed to determine the water envelope and the proper blank value for correcting the ambient air concentration measurements accordingly. Heating and flushing of the trap should continue after the integration period has ended to insure all water has been removed to prevent buildup of water in the trap.

Therefore, be sure that the 6-port valve remains in the inject position until all moisture has purged from the trap (3 minutes or longer).

11.4.18 Use the dynamic calibration curve (see Section 11.3) to convert the integrated peak area reading into concentration units (ppmC). Note that the NMOC peak shape may not be precisely reproducible due to variations in heating the trap, but the total NMOC peak area should be reproducible.

11.4.19 Analyze each canister sample at least twice and report the average NMOC concentration. Problems during an analysis occasionally will cause erratic or inconsistent results. If the first two analyses do not agree within ± 5% relative standard deviation (RSD), additional analyses should be made to identify inaccurate measurements and produce a more accurate average (see also Section 12.2).

12. Performance Criteria and Quality Assurance

This section summarizes required quality assurance measures and provides guidance concerning performance criteria that should be achieved within each laboratory.

12.1 Standard Operating Procedures (SOPs)

12.1.1 Users should generate SOPs describing and documenting the following activities in their laboratory: (1) assembly, calibration, leak check, and operation of the specific sampling system and equipment used; (2) preparation, storage, shipment, and handling of samples; (3) assembly, leak check, calibration, and operation of the analytical system, addressing the specific equipment used; (4) canister storage and cleaning; and (5) all aspects of data recording and processing, including lists of computer hardware and software used.

12.1.2 SOPs should provide specific stepwise instructions and should be readily available to, and understood by, the laboratory personnel conducting the work.

12.2 Method Sensitivity, Accuracy, Precision and Linearity

12.2.1 The sensitivity and precision of the method is proportional to the sample volume. However, ice formation in the trap may reduce or stop the sample flow during trapping if the sample volume exceeds 500 cm^3. Sample volumes below about 100-150 cm^3 may cause increased measurement variability due to dead volume

in lines and valves. For most typical ambient NMOC concentrations, sample volumes in the range of 200-400 cm^3 appear to be appropriate. If a response peak obtained with a 400 cm^3 sample is off scale or exceeds the calibration range, a second analysis can be carried out with a smaller volume. The actual sample volume used need not be accurately known if it is precisely repeatable during both calibration and analysis. Similarly, the actual volume of the vacuum reservoir need not be accurately known. But the reservoir volume should be matched to the pressure range and resolution of the absolute pressure gauge so that the measurement of the pressure change in the reservoir, hence the sample volume, is repeatable within 1%. A 1000 cm^3 vacuum reservoir and a pressure change of 200 mm Hg, measured with the specified pressure gauge, have provided a sampling precision of $\pm$ 1.31 cm^3. A smaller volume reservoir may be used with a greater pressure change to accommodate absolute pressure gauges with lower resolution, and vice versa.

12.2.2 Some FID detector systems associated with laboratory chromatographs may have autoranging. Others may provide attenuator control and internal full-scale output voltage selectors. An appropriate combination should be chosen so that an adequate output level for accurate integration is obtained down to the detection limit; however, the electrometer or integrator must not be driven into saturation at the upper end of the calibration. Saturation of the electrometer may be indicated by flattening of the calibration curve at high concentrations. Additional adjustments of range and sensitivity can be provided by adjusting the sample volume use, as discussed in Section 12.2.1.

12.2.3 System linearity has been documented (6) from 0 to 10,000 ppbC.

12.2.4 Some organic compounds contained in ambient air are "sticky" and may require repeated analyses before they fully appear in the FID output. Also, some adjustment may have to be made in the integrator off time setting to accommodate compounds that reach the FID late in the analysis cycle. Similarly, "sticky" compounds from ambient samples or from contaminated propane standards may temporarily contaminate the analytical

system and can affect subsequent analyses. Such temporary contamination can usually be removed by repeated analyses of humidified zero air.

12.2.5 Simultaneous collection of duplicate samples decreases the possibility of lost measurement data from samples lost due to leakage or contamination in either of the canisters. Two (or more) canisters can be filled simultaneously by connecting them in parallel (see Figure 2(a)) and selecting an appropriate flow rate to accommodate the number of canisters (Section 10.2.2). Duplicate (or replicate) samples also allow assessment of measurement precision based on the differences between duplicate samples (or the standard deviations among replicate samples).

13. Method Modification

13.1 Sample Metering System

13.1.1 Although the vacuum reservoir and absolute pressure gauge technique for metering the sample volume during analysis is efficient and convenient, other techniques should work also.

13.1.2 A constant sample flow could be established with a vacuum pump and a critical orifice, with the six-port valve being switched to the sample position for a measured time period. A gas volume meter, such as a wet test meter, could also be used to measure the total volume of sample air drawn through the trap. These alternative techniques should be tested and evaluated as part of a user-prepared SOP manual.

13.2 FID Detector System

13.2.1 A variety of FID detector systems should be adaptable to the method.

13.2.2 The specific flow rates and necessary modifications for the helium carrier for any alternative FID instrument should be evaluated prior to use as apart of the user-prepared SOP manual.

13.3 Range

13.3.1 It may be possible to increase the sensitivity of the method by increasing the sample volume. However, limitations may arise such as plugging of the trap by ice.

13.3.2 Any attempt to increase sensitivity should be evaluated as part of the user-prepared SOP manual.

13.4 Sub-Atmospheric Pressure Canister Sampling

13.4.1 Collection and analysis of canister air samples at sub-atmospheric pressure is also possible with minor modifications to the sampling and analytical procedures.

13.4.2 Method TO-14, "Integrated Canister Sampling for Selective Organics: Pressurized and Sub-atmospheric Collection Mechanism," addresses sub-atmospheric pressure canister sampling. Additional information can be found in the literature (11-17).

1. Uses, Limitations, and Technical Basis of Procedures for Quantifying Relationships Between Photochemical Oxidants and Precursors, EPA-450/2-77-21a, U.S. Environmental Protection Agency, Research Triangle Park, NC, November 1977.

2. Guidance for Collection of Ambient Non-Methane Organic Compound (NMOC) Data for Use in 1982 Ozone SIP Development, EPA-450/4-80-011, U.S. Environmental Protection Agency, Research Triangle Park, NC, June 1980.

3. H.B. Singh, Guidance for the Collection and Use of Ambient Hydrocarbons Species Data in Development of Ozone Control Strategies, EPA-450/4-80-008, U.S. Environmental Protection Agency, Research Triangle Park, NC, April 1980.

4. R.M. Riggin, Technical Assistance Document for Sampling and Analysis of Toxic Organic Compounds in Ambient Air, EPA-600/4-83-027, U.S. Environmental Protection Agency, Research Triangle Park, NC, 1983.

5. M.J. Jackson, et al., Technical Assistance Document for Assembly and Operation of the Suggested Preconcentration Direct Flame Ionization Detection (PDFID) Analytical System, publication scheduled for late 1987; currently available in draft form from the Quality Assurance Division, MD-77, U.S. Environmental Protection Agency, Research Triangle Park, NC 27711.

6. R.K.M. Jayanty, et al., Laboratory Evaluation of Non-Methane Organic Carbon Determination in Ambient Air by Cryogenic Preconcentration and Flame Ionization Detection, EPA-600/54-82-019, U.S. Environmental Protection Agency, Research Triangle Park, NC, July 1982.

7. R.D. Cox, et al., "Determination of Low Levels of Total Non-Methane Hydrocarbon Content in Ambient Air," Environ. Sci. Technol., 16 (1):57. 1982.

8. F.F. McElroy, et al., A Cryogenic Preconcentration - Direct FID (PDFID) Method for Measurement of NMOC in the Ambient Air, EPA-600/4-85-063, U.S. Environmental Protection Agency, Research Triangle Park, NC, August 1985.

9. F.W. Sexton, et al., A Comparative Evaluation of Seven Automated Ambient Non-Methane Organic Compound Analyzers, EPA-600/54-82-046, U.S. Environmental Protection Agency, Research Triangle Park, NC, August 1982.

10. H.G. Richter, Analysis of Organic Compound Data Gathered During 1980 in Northeast Corridor Cities, EPA-450/4-83-017, U.S. Environmental Protection Agency, Research Triangle Park, NC, April 1983.

11. Cox, R.D. "Sample Collection and Analytical Techniques for Volatile Organics in Air," presented at APCA Specialty Conference, Chicago, IL, March 22-24, 1983.

12. Rasmussen, R.A. and Khalil, M.A.K. "Atmospheric Halocarbons: Measurements and Analyses of Selected Trace Gases," Proc. NATO ASI on Atmospheric Ozone, 1980, 209-231.

13. Oliver, K.D., Pleil, J.D. and McClenny, W.A. "Sample Integrity of Trace Level Volatile Organic Compounds in Ambient Air Stored in "SUMMA®" Polished Canisters," accepted for publication in Atmospheric Environment as of January 1986. Draft available from W.A. McClenny, MD-44, EMSL, EPA, Research Triangle Park, NC 27711.

14. McClenny, W.A. Pleil, J.D., Holdren, J.W. and Smith, R.N.; 1984. "Automated Cryogenic Preconcentration and Gas Chromatographic Determination of Volatile Organic Compounds," Anal. Chem. 56:2947.

15. Pleil, J.D. and Oliver, K.D., 1985, "Evaluation of Various Configurations of Nafion Dryers: Water Removal from Air Samples Prior to Gas Chromatographic Analysis." EPA Contract No. 68-02-4035.

16. Oliver, K.D.; Pleil, J.D. and McClenny, W.A.; 1986. "Sample Integrity of Trace Level Volatile Organic Compounds in Ambient Air Stored in "SUMMA®" Polished Canisters," Atmospheric Environ. 20:1403.

17. Oliver, K.D. and Pleil, J.D., 1985, "Automated Cryogenic Sampling and Gas Chromatographic Analysis of Ambient Vapor-Phase Organic Compounds: Procedures and Comparison Tests," EPA Contract No. 68-02-4035, Research Triangle Park, NC, Northrop Services, Inc. - Environmental Sciences.

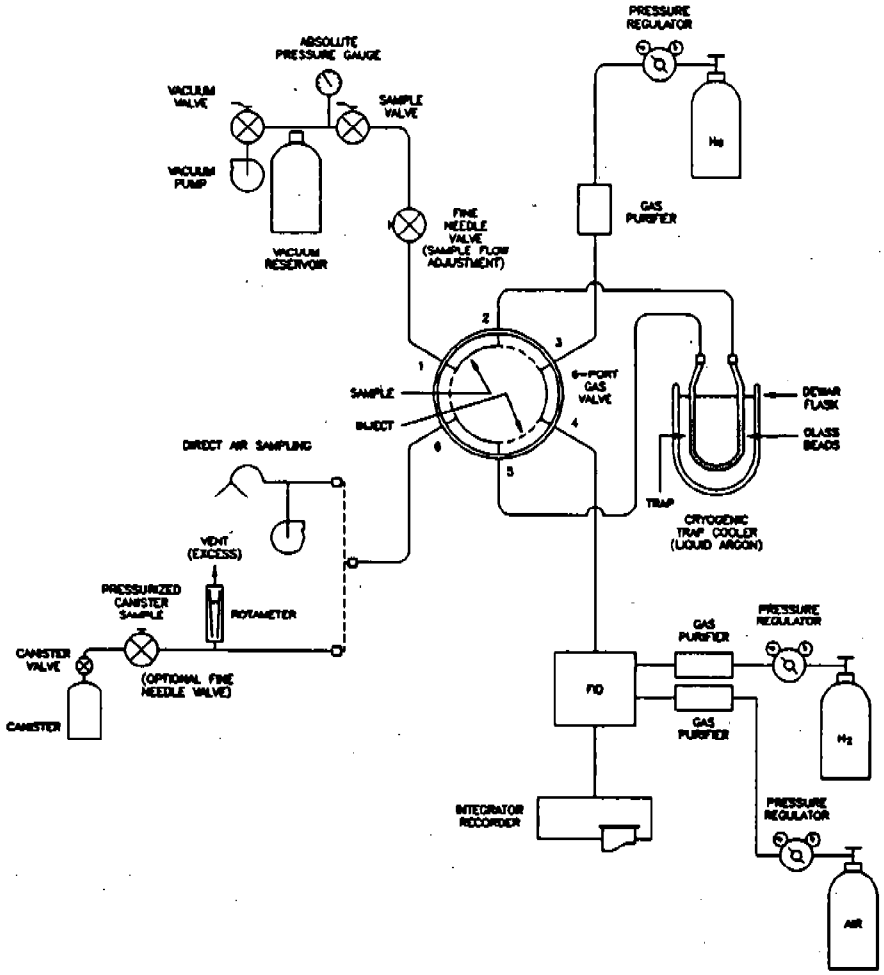

FIGURE 1. SCHEMATIC OF ANALYTICAL SYSTEM FOR NMOC-TWO SAMPLING MODES

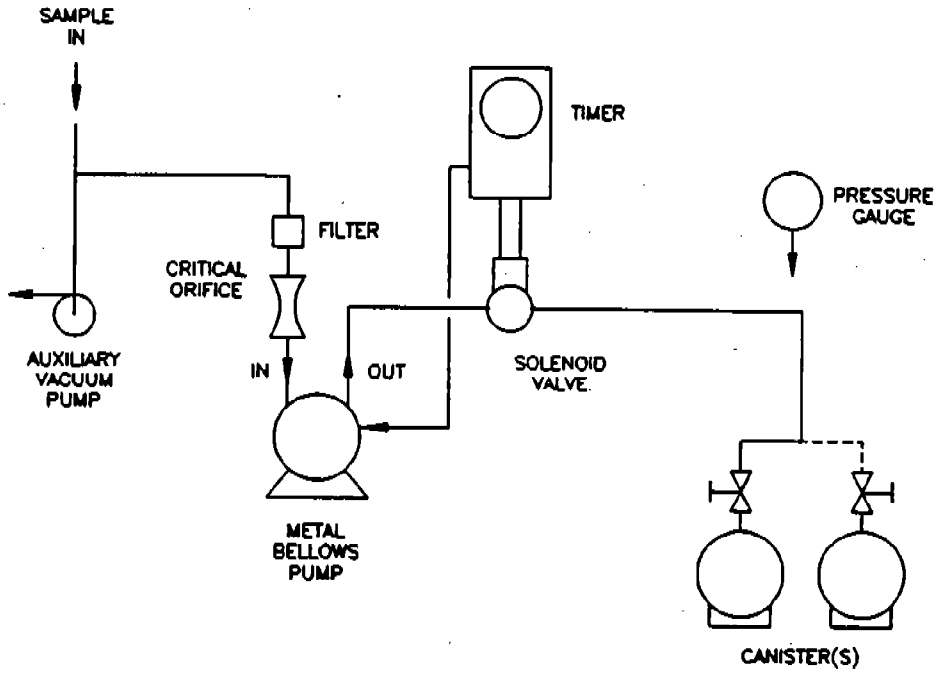

FIGURE 2. SAMPLE SYSTEM FOR AUTOMATIC COLLECTION OF 3-HOUR INTEGRATED AIR SAMPLES

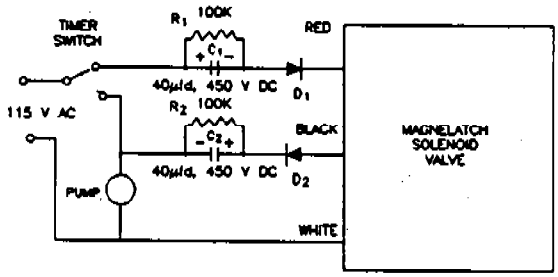

COMPONENTS

Capacitor C_1 and C_2 - 40 μf, 450 VDC (Sprague Atom® Type 1712 or equivalent)
Resistor R_1 and R_2 - 0.5 meg, 5% tolerance
Diode D_1 and D_2 - 1000 PRV, 2.5 A (RCA, SK 3081 or equivalent)

FIGURE 3[a]. SIMPLE CIRCUIT FOR OPERATING MAGNELATCH VALVE

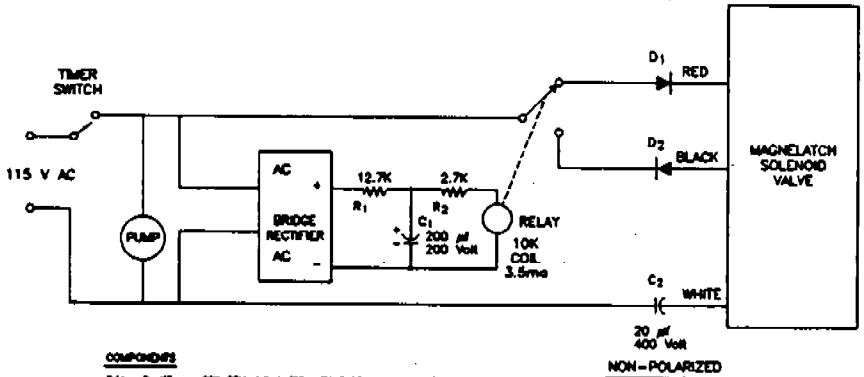

COMPONENTS

Bridge Rectifier - 200 PRV, 1.5 A (RCA, SK 3100 or equivalent)
Diode D_1 and D_2 - 1000 PRV, 2.5 A (RCA, SK 3081 or equivalent)
Capacitor C_1 - 200 μf, 250 VDC (Sprague Atom® Type 1020 or equivalent)
Capacitor C_2 - 20 μf, 400 VDC Non-Polarized (Sprague Atom® Type 1002 or equivalent)
Relay - 10,000 ohm coil, 3.5 ma (Allied Potter and Brumfield, KCP 5, or equivalent)
Resistor R_1 and R_2 - 0.5 meg, 5% tolerance

FIGURE 3[b]. IMPROVED CIRCUIT DESIGNED TO HANDLE POWER INTERRUPTIONS

FIGURE 3. ELECTRICAL PULSE CIRCUITS FOR DRIVING SKINNER MAGNELATCH SOLENOID VALVE WITH A MECHANICAL TIMER

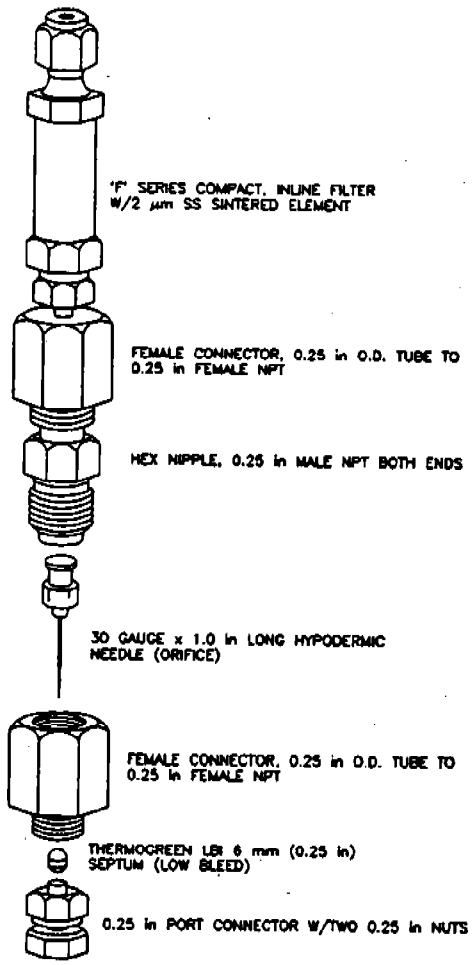

FIGURE 4. FILTER AND HYPODERMIC NEEDLE ASSEMBLY FOR SAMPLE INLET FLOW CONTROL

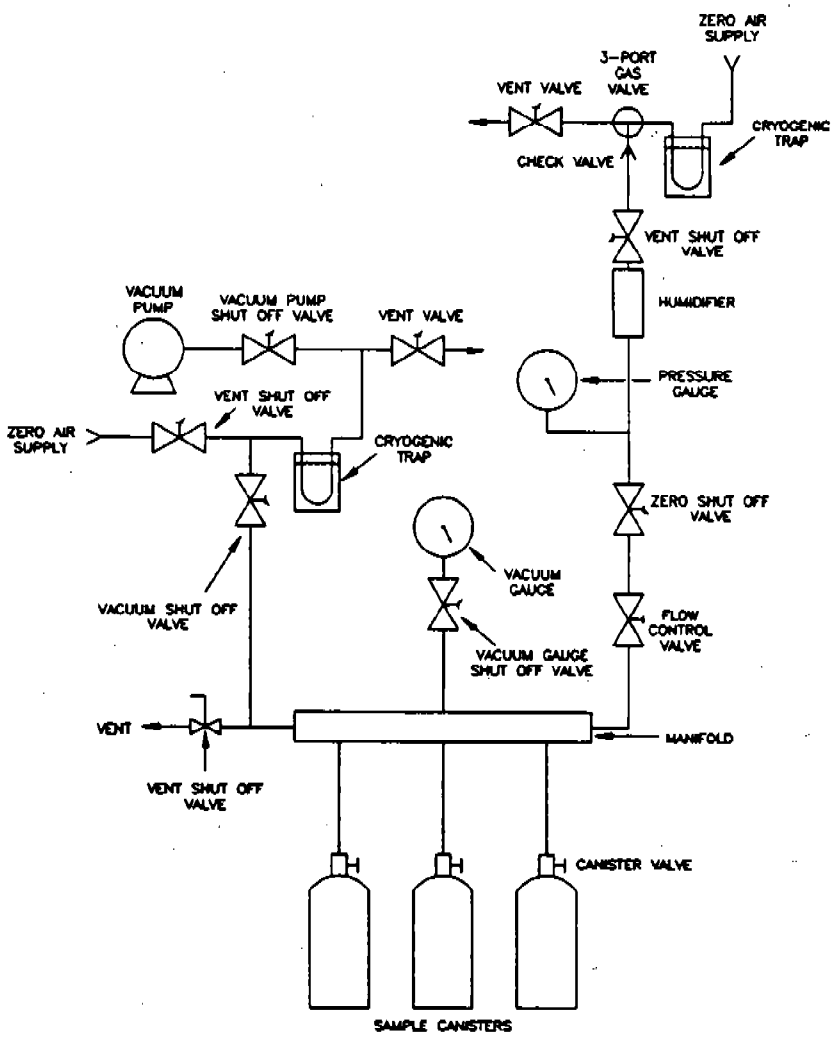

FIGURE 5. CANISTER CLEANING SYSTEM

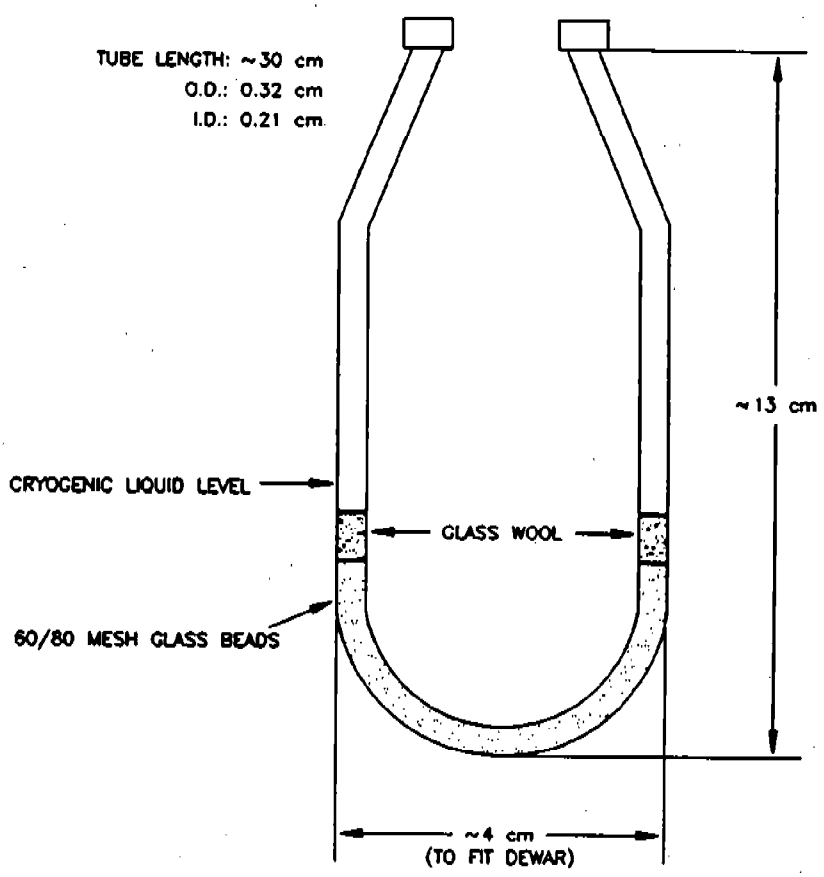

FIGURE 6. CRYOGENIC SAMPLE TRAP DIMENSIONS

PRESSURIZED CANISTER SAMPLING DATA SHEET

GENERAL INFORMATION:

PROJECT: _____
SITE: _____
LOCATION: _____
MONITOR STATION NUMBER: _____
PUMP SERIAL NUMBER: _____

OPERATOR: _____
ORIFICE IDENTIFICATION: _____
FLOW RATE: _____
CALIBRATED BY: _____
LEAK CHECK _____ Pass _____ Fail

FIELD DATA:

Date	Canister Serial Number	Sample Number	Sample Time		Average Atmospheric Conditions			Canister pressure Final, Laboratory		Comments
			Start	Stop	Temperature	Pressure	Relative Humidity			

_____ Date

_____ Title

_____ Signature

FIGURE 7. EXAMPLE SAMPLING DATA SHEET

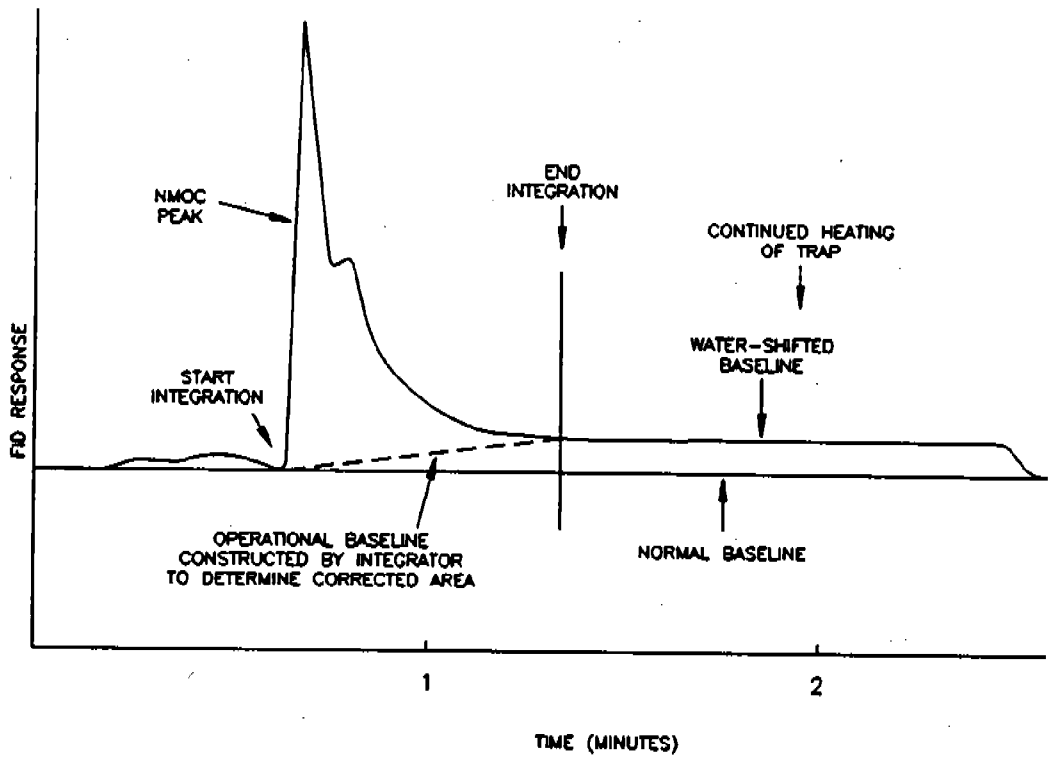

FIGURE 8. CONSTRUCTION OF OPERATIONAL BASELINE AND CORRESPONDING CORRECTION OF PEAK AREA

APPENDIX C

1993 NMOC MONITORING PROGRAM SITE DATA

Long Island, New York (LINY)

1993 NMOC Program (AIRS #36-059-0005)

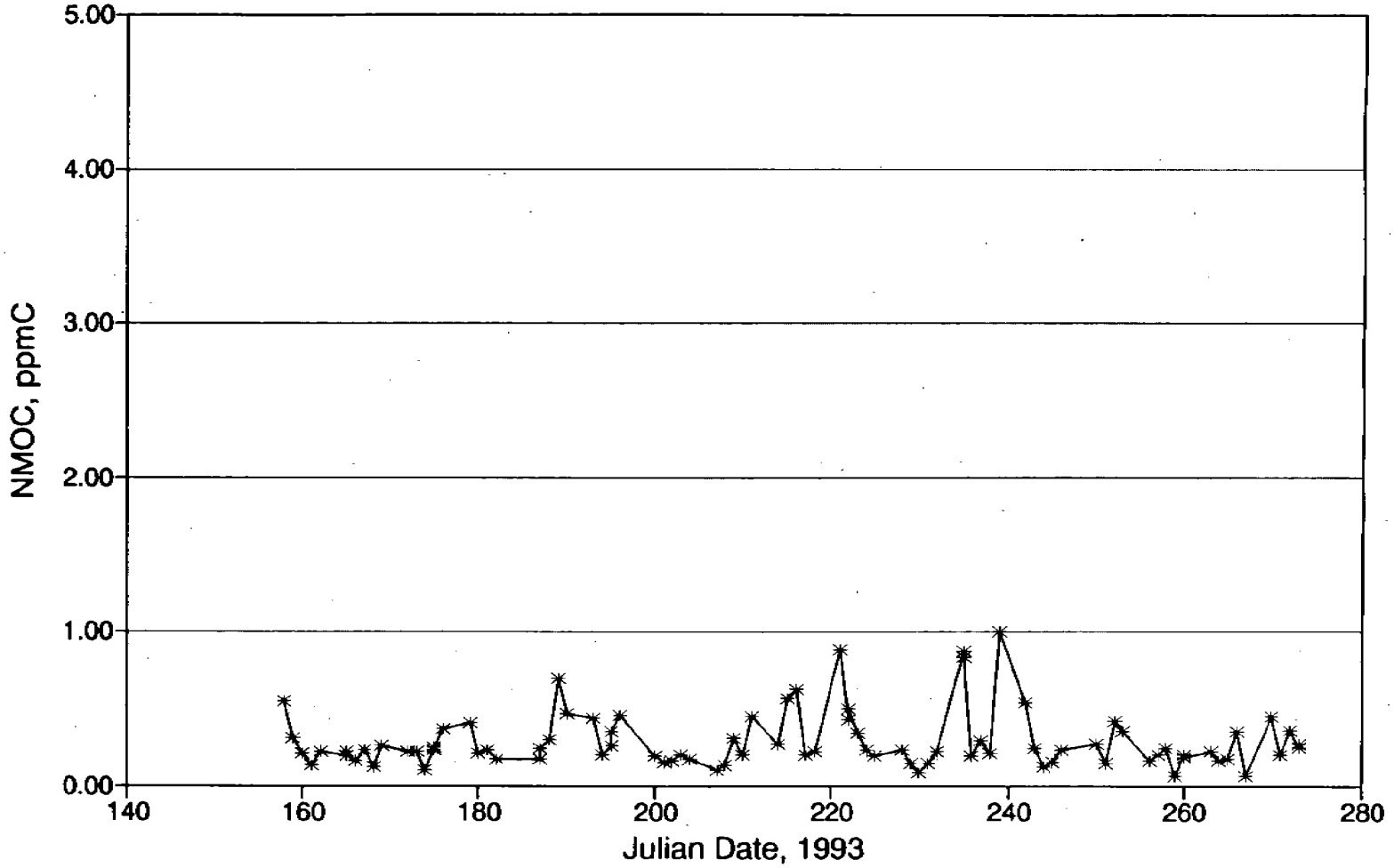

1993 NMOC Data for Long Island, NY (LINY)

Site Code	Collection Date	Julian Date	Can #	Radian ID #	Duplicate	Radian Analysis Channel	NMOC ppmC
LINY	06/07/93	158	781	1012	N	C	0.550
LINY	06/08/93	159	886	1007	N	D	0.309
LINY	06/09/93	160	140	1019	N	C	0.214
LINY	06/10/93	161	406	1037	N	D	0.129
LINY	06/11/93	162	814	1047	N	C	0.224
LINY	06/14/93	165	172	1067	Y	C	0.195
LINY	06/14/93	165	828	1068	Y	D	0.218
LINY	06/15/93	166	720	1063	N	D	0.162
LINY	06/16/93	167	670	1097	N	C	0.236
LINY	06/17/93	168	7	1101	N	C	0.123
LINY	06/18/93	169	20	1102	N	C	0.262
LINY	06/21/93	172	178	1110	N	A	0.226
LINY	06/22/93	173	170	1137	N	B	0.222
LINY	06/23/93	174	149	1136	N	A	0.106
LINY	06/24/93	175	766	1172	Y	A	0.229
LINY	06/24/93	175	57	1173	Y	A	0.253
LINY	06/25/93	176	99	1180	N	A	0.374
LINY	06/28/93	179	767	1170	N	A	0.406
LINY	06/29/93	180	852	1197	N	C	0.208
LINY	06/30/93	181	154	1206	N	D	0.228
LINY	07/01/93	182	870	1262	N	D	0.170
LINY	07/06/93	187	170	1247	Y	C	0.168
LINY	07/06/93	187	690	1248	Y	C	0.241
LINY	07/07/93	188	805	1253	N	C	0.298
LINY	07/08/93	189	678	1298	N	C	0.694
LINY	07/09/93	190	57	1296	N	C	0.464
LINY	07/12/93	193	641	1291	N	D	0.437
LINY	07/13/93	194	766	1311	N	C	0.201
LINY	07/14/93	195	102	1308	Y	D	0.258
LINY	07/14/93	195	84	1309	Y	D	0.352
LINY	07/15/93	196	172	1346	N	C	0.463
LINY	07/19/93	200	140	1374	N	C	0.194
LINY	07/20/93	201	175	1370	N	C	0.149
LINY	07/21/93	202	623	1410	N	C	0.161
LINY	07/22/93	203	889	1411	N	D	0.198

1993 NMOC Data for Long Island, NY (LINY)

Site Code	Collection Date	Julian Date	Can #	Radian ID #	Duplicate	Radian Analysis Channel	NMOC ppmC
LINY	07/23/93	204	629	1414	N	C	0.176
LINY	07/26/93	207	77	1448	N	C	0.104
LINY	07/27/93	208	7	1451	N	A	0.133
LINY	07/28/93	209	685	1442	N	B	0.308
LINY	07/29/93	210	670	1470	N	A	0.198
LINY	07/30/93	211	726	1474	N	B	0.453
LINY	08/02/93	214	126	1500	N	C	0.268
LINY	08/03/93	215	179	1501	N	D	0.569
LINY	08/04/93	216	928	1529	N	C	0.624
LINY	08/05/93	217	766	1530	N	C	0.198
LINY	08/06/93	218	723	1566	N	C	0.225
LINY	08/09/93	221	713	1567	N	D	0.879
LINY	08/10/93	222	849	1559	Y	C	0.432
LINY	08/10/93	222	198	1560	Y	C	0.494
LINY	08/11/93	223	52	1593	N	C	0.336
LINY	08/12/93	224	848	1592	N	D	0.231
LINY	08/13/93	225	171	1624	N	C	0.193
LINY	08/16/93	228	22	1623	N	C	0.227
LINY	08/17/93	229	119	1627	N	C	0.146
LINY	08/18/93	230	816	1668	N	D	0.088
LINY	08/19/93	231	629	1667	N	D	0.140
LINY	08/20/93	232	189	1659	N	C	0.220
LINY	08/23/93	235	118	1716	Y	C	0.871
LINY	08/23/93	235	302	1717	Y	C	0.836
LINY	08/24/93	236	705	1700	N	C	0.190
LINY	08/25/93	237	694	1701	N	D	0.287
LINY	08/26/93	238	911	1742	N	C	0.212
LINY	08/27/93	239	825	1741	N	C	0.996
LINY	08/30/93	242	170	1774	N	C	0.539
LINY	08/31/93	243	198	1775	N	C	0.242
LINY	09/01/93	244	846	1808	N	C	0.119
LINY	09/02/93	245	789	1815	N	C	0.152
LINY	09/03/93	246	771	1806	N	D	0.235
LINY	09/07/93	250	118	1837	N	C	0.268
LINY	09/08/93	251	406	1828	Y	C	0.145

1993 NMOC Data for Long Island, NY (LINY)

Site Code	Collection Date	Julian Date	Can #	Radian ID #	Duplicate	Radian Analysis Channel	NMOC ppmC
LINY	09/08/93	251	670	1829	Y	C	0.146
LINY	09/09/93	252	793	1869	N	D	0.424
LINY	09/10/93	253	683	1874	N	C	0.351
LINY	09/13/93	256	853	1880	N	C	0.166
LINY	09/14/93	257	649	1913	N	C	0.204
LINY	09/15/93	258	675	1912	N	C	0.243
LINY	09/16/93	259	885	1910	N	D	0.06
LINY	09/17/93	260	121	1946	Y	C	0.198
LINY	09/17/93	260	618	1947	Y	C	0.182
LINY	09/20/93	263	673	1948	N	C	0.217
LINY	09/21/93	264	726	1955	N	C	0.163
LINY	09/22/93	265	860	1981	N	C	0.17
LINY	09/23/93	266	898	1972	N	D	0.348
LINY	09/24/93	267	129	2027	N	D	0.062
LINY	09/27/93	270	856	2022	N	C	0.447
LINY	09/28/93	271	927	2016	N	C	0.206
LINY	09/29/93	272	728	2019	N	C	0.359
LINY	09/30/93	273	918	2052	Y	C	0.256
LINY	09/30/93	273	182	2053	Y	C	0.269

Newark, New Jersey (NWNJ)

1993 NMOC Program (AIRS #34-013-0011)

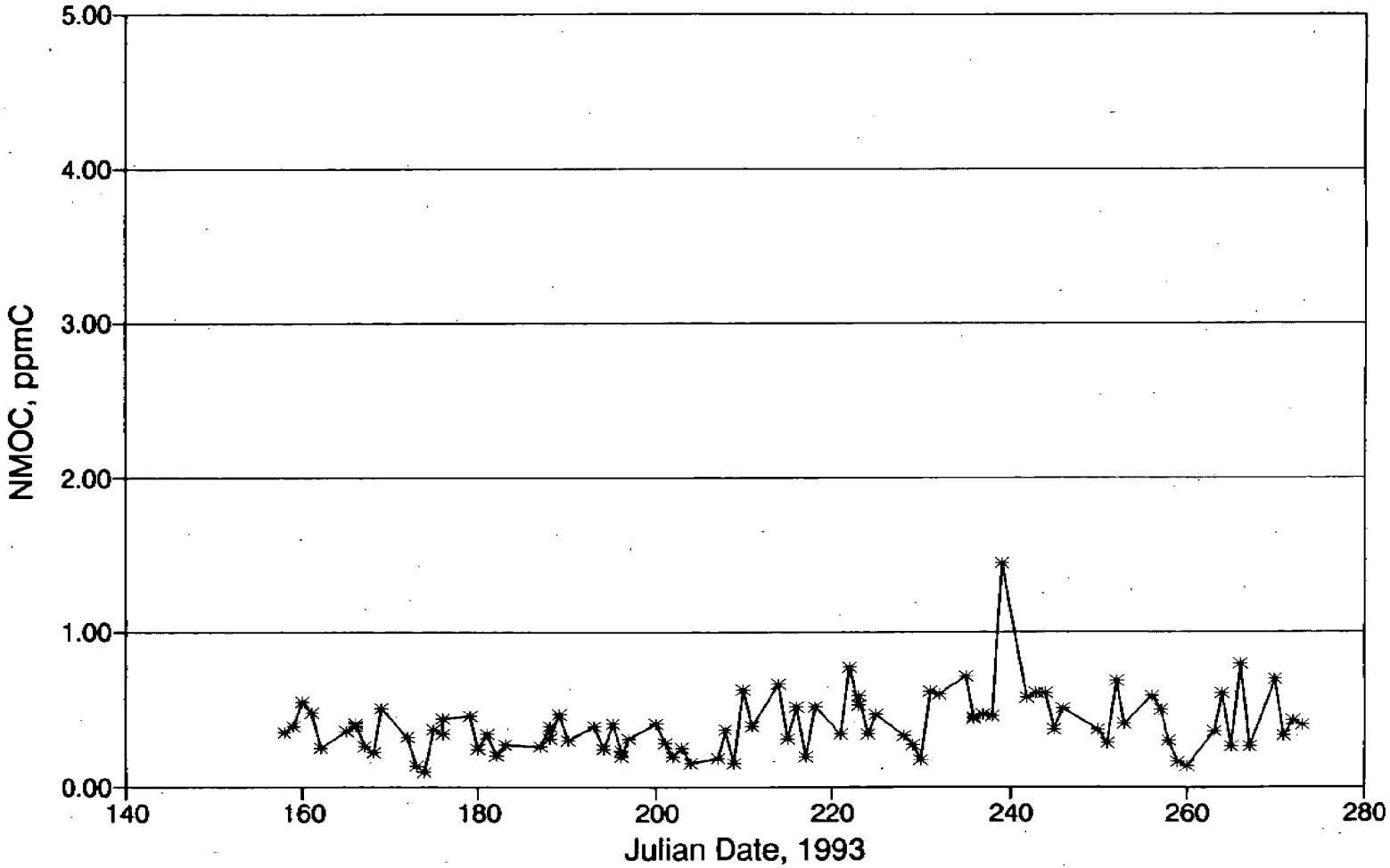

1993 NMOC Data for Newark, NJ (NWNJ)

Site Code	Collection Date	Julian Date	Can #	Radian ID #	Duplicate	Radian Analysis Channel	NMOC ppmC
NWNJ	06/07/93	158	837	1017	N	D	0.346
NWNJ	06/08/93	159	705	1016	N	C	0.386
NWNJ	06/09/93	160	658	1042	N	C	0.548
NWNJ	06/10/93	161	679	1046	N	D	0.482
NWNJ	06/11/93	162	784	1057	N	C	0.253
NWNJ	06/14/93	165	929	1064	N	C	0.364
NWNJ	06/15/93	166	712	1078	Y	D	0.389
NWNJ	06/15/93	166	86	1079	Y	C	0.407
NWNJ	06/16/93	167	640	1072	N	C	0.258
NWNJ	06/17/93	168	635	1086	N	C	0.221
NWNJ	06/18/93	169	37	1107	N	B	0.511
NWNJ	06/21/93	172	80	1131	N	A	0.322
NWNJ	06/22/93	173	681	1130	N	A	0.135
NWNJ	06/23/93	174	406	1146	N	A	0.090
NWNJ	06/24/93	175	111	1151	N	A	0.374
NWNJ	06/25/93	176	797	1184	Y	D	0.337
NWNJ	06/25/93	176	164	1185	Y	D	0.437
NWNJ	06/28/93	179	680	1194	N	C	0.455
NWNJ	06/29/93	180	762	1220	N	C	0.245
NWNJ	06/30/93	181	52	1215	N	C	0.340
NWNJ	07/01/93	182	927	1218	N	D	0.200
NWNJ	07/02/93	183	406	1233	N	C	0.268
NWNJ	07/06/93	187	77	1268	N	D	0.265
NWNJ	07/07/93	188	50	1264	Y	D	0.393
NWNJ	07/07/93	188	850	1265	Y	D	0.310
NWNJ	07/08/93	189	680	1278	N	C	0.466
NWNJ	07/09/93	190	89	1287	N	D	0.301
NWNJ	07/12/93	193	789	1314	N	C	0.393
NWNJ	07/13/93	194	189	1310	N	D	0.244
NWNJ	07/14/93	195	806	1334	N	C	0.414
NWNJ	07/15/93	196	7	1327	Y	D	0.236
NWNJ	07/15/93	196	687	1328	Y	D	0.190
NWNJ	07/16/93	197	807	1361	N	D	0.308
NWNJ	07/19/93	200	41	1350	N	C	0.409
NWNJ	07/20/93	201	28	1379	N	D	0.285

1993 NMOC Data for Newark, NJ (NWNJ)

Site Code	Collection Date	Julian Date	Can #	Radian ID #	Duplicate	Radian Analysis Channel	NMOC ppmC
NWNJ	07/21/93	202	825	1378	N	C	0.195
NWNJ	07/22/93	203	651	1415	N	D	0.253
NWNJ	07/23/93	204	302	1444	N	D	0.157
NWNJ	07/26/93	207	844	1450	N	A	0.186
NWNJ	07/27/93	208	149	1441	N	C	0.369
NWNJ	07/28/93	209	806	1465	N	A	0.151
NWNJ	07/29/93	210	774	1478	N	B	0.627
NWNJ	07/30/93	211	44	1496	N	C	0.392
NWNJ	08/02/93	214	182	1507	N	D	0.665
NWNJ	08/03/93	215	823	1528	N	D	0.310
NWNJ	08/04/93	216	679	1533	N	D	0.516
NWNJ	08/05/93	217	20	1546	N	C	0.188
NWNJ	08/06/93	218	720	1554	N	D	0.521
NWNJ	08/09/93	221	164	1556	N	D	0.344
NWNJ	08/10/93	222	149	1578	N	D	0.774
NWNJ	08/11/93	223	651	1589	Y	C	0.529
NWNJ	08/11/93	223	783	1590	Y	C	0.588
NWNJ	08/12/93	224	166	1595	N	D	0.337
NWNJ	08/13/93	225	179	1614	N	D	0.467
NWNJ	08/16/93	228	712	1640	N	D	0.330
NWNJ	08/17/93	229	607	1646	N	C	0.273
NWNJ	08/18/93	230	644	1650	N	D	0.176
NWNJ	08/19/93	231	176	1671	N	C	0.620
NWNJ	08/20/93	232	153	1715	N	D	0.597
NWNJ	08/23/93	235	873	1707	N	C	0.720
NWNJ	08/24/93	236	830	1712	Y	C	0.444
NWNJ	08/24/93	236	84	1713	Y	C	0.437
NWNJ	08/25/93	237	60	1728	N	D	0.471
NWNJ	08/26/93	238	660	1745	N	C	0.458
NWNJ	08/27/93	239	816	1754	N	D	1.446
NWNJ	08/30/93	242	186	1790	N	D	0.573
NWNJ	08/31/93	243	623	1780	N	C	0.605
NWNJ	09/01/93	244	707	1792	N	D	0.603
NWNJ	09/02/93	245	40	1809	N	D	0.366
NWNJ	09/03/93	246	869	1819	N	C	0.504

1993 NMOC Data for Newark, NJ (NWNJ)

Site Code	Collection Date	Julian Date	Can #	Radian ID #	Duplicate	Radian Analysis Channel	NMOC ppmC
NWNJ	09/07/93	250	928	1851	N	D	0.368
NWNJ	09/08/93	251	805	1839	Y	C	0.284
NWNJ	09/08/93	251	108	1840	Y	C	0.284
NWNJ	09/09/93	252	927	1866	N	C	0.690
NWNJ	09/10/93	253	910	1885	N	C	0.411
NWNJ	09/13/93	256	849	1887	N	D	0.586
NWNJ	09/14/93	257	305	1894	N	D	0.496
NWNJ	09/15/93	258	875	1909	N	D	0.305
NWNJ	09/16/93	259	15	1941	N	D	0.160
NWNJ	09/17/93	260	653	1930	Y	D	0.137
NWNJ	09/17/93	260	871	1931	Y	D	0.136
NWNJ	09/20/93	263	894	1971	N	D	0.363
NWNJ	09/21/93	264	303	1959	N	C	0.608
NWNJ	09/22/93	265	690	1978	N	C	0.259
NWNJ	09/23/93	266	783	1991	N	D	0.789
NWNJ	09/24/93	267	20	2002	N	D	0.261
NWNJ	09/27/93	270	830	2030	N	D	0.696
NWNJ	09/28/93	271	649	2029	N	C	0.330
NWNJ	09/29/93	272	819	2047	N	C	0.428
NWNJ	09/30/93	273	705	2050	N	D	0.395

Plainfield, New Jersey (PLNJ)

1993 NMOC Program (AIRS #34-039-5001)

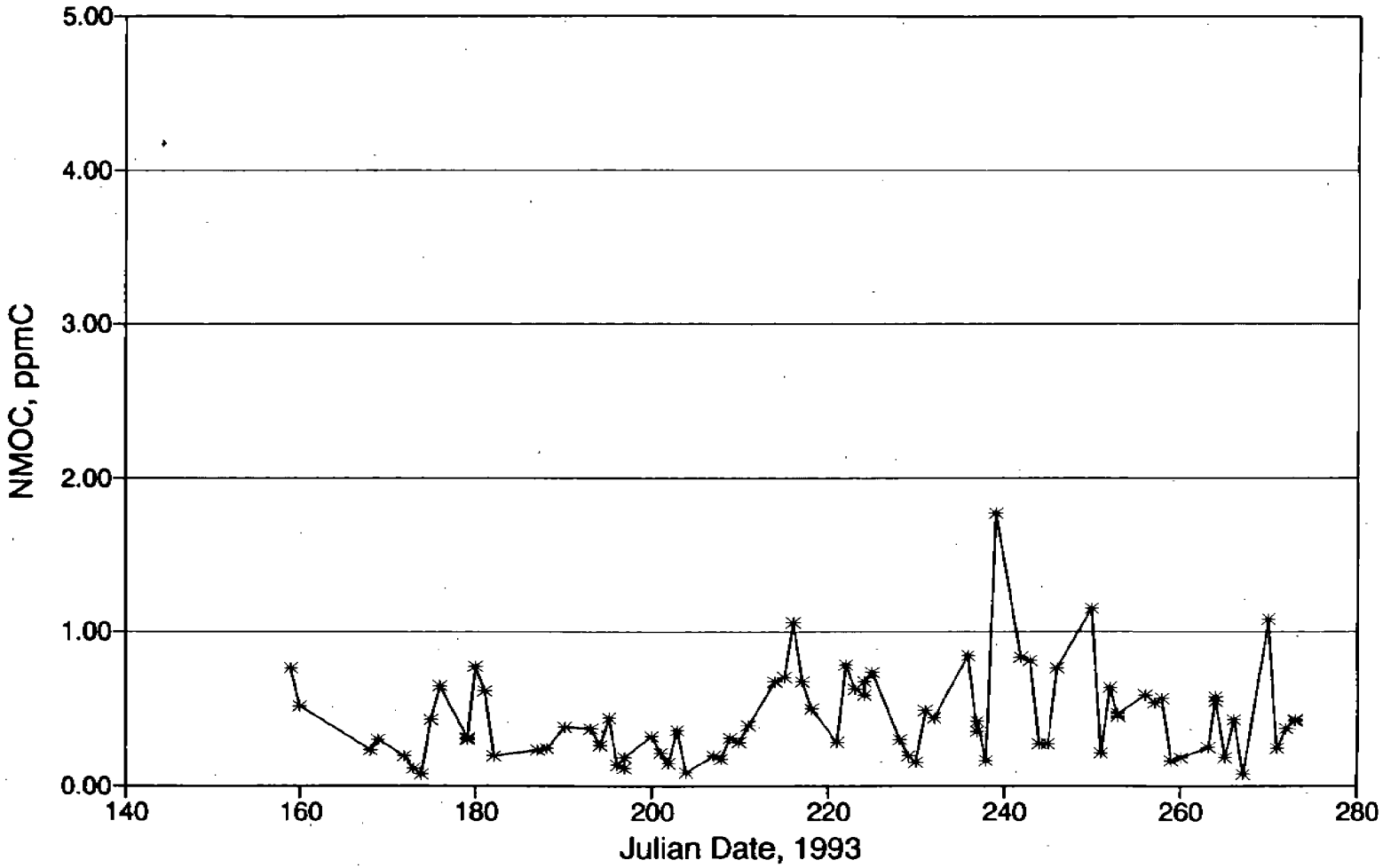

1993 NMOC Data for Plainfield, NJ (PLNJ)

Site Code	Collection Date	Julian Date	Can #	Radian ID #	Duplicate	Radian Analysis Channel	NMOC ppmC
PLNJ	06/08/93	159	855	1025	N	D	0.764
PLNJ	06/09/93	160	9	1028	N	D	0.516
PLNJ	06/17/93	168	72	1127	N	B	0.232
PLNJ	06/18/93	169	848	1128	N	B	0.298
PLNJ	06/21/93	172	143	1123	N	A	0.192
PLNJ	06/22/93	173	146	1157	N	B	0.109
PLNJ	06/23/93	174	651	1187	N	C	0.069
PLNJ	06/24/93	175	910	1186	N	C	0.431
PLNJ	06/25/93	176	764	1189	N	C	0.648
PLNJ	06/28/93	179	687	1192	Y	D	0.313
PLNJ	06/28/93	179	803	1193	Y	D	0.297
PLNJ	06/29/93	180	126	1228	N	D	0.773
PLNJ	06/30/93	181	633	1234	N	C	0.617
PLNJ	07/01/93	182	670	1227	N	D	0.188
PLNJ	07/06/93	187	679	1274	N	C	0.230
PLNJ	07/07/93	188	149	1275	N	D	0.246
PLNJ	07/09/93	190	22	1297	N	D	0.376
PLNJ	07/12/93	193	46	1325	N	C	0.368
PLNJ	07/13/93	194	164	1322	N	C	0.265
PLNJ	07/14/93	195	897	1336	N	C	0.443
PLNJ	07/15/93	196	803	1360	N	C	0.132
PLNJ	07/16/93	197	407	1357	Y	D	0.115
PLNJ	07/16/93	197	148	1358	Y	D	0.182
PLNJ	07/19/93	200	928	1408	N	C	0.318
PLNJ	07/20/93	201	147	1416	N	C	0.207
PLNJ	07/21/93	202	54	1402	N	C	0.139
PLNJ	07/22/93	203	823	1399	N	D	0.356
PLNJ	07/23/93	204	42	1437	N	C	0.085
PLNJ	07/26/93	207	764	1439	N	D	0.193
PLNJ	07/27/93	208	183	1449	N	C	0.172
PLNJ	07/28/93	209	22	1464	N	B	0.307
PLNJ	07/29/93	210	694	1467	N	B	0.283
PLNJ	07/30/93	211	38	1502	N	C	0.393
PLNJ	08/02/93	214	893	1506	N	C	0.679
PLNJ	08/03/93	215	54	1527	N	D	0.702

1993 NMOC Data for Plainfield, NJ (PLNJ)

Site Code	Collection Date	Julian Date	Can #	Radian ID #	Duplicate	Radian Analysis Channel	NMOC ppmC
PLNJ	08/04/93	216	730	1534	N	D	1.061
PLNJ	08/05/93	217	794	1576	N	C	0.677
PLNJ	08/06/93	218	762	1580	N	D	0.501
PLNJ	08/09/93	221	77	1569	N	D	0.282
PLNJ	08/10/93	222	131	1570	N	D	0.784
PLNJ	08/11/93	223	774	1587	N	C	0.626
PLNJ	08/12/93	224	764	1582	Y	D	0.584
PLNJ	08/12/93	224	800	1583	Y	D	0.679
PLNJ	08/13/93	225	177	1630	N	D	0.736
PLNJ	08/16/93	228	186	1616	N	C	0.299
PLNJ	08/17/93	229	147	1658	N	C	0.188
PLNJ	08/18/93	230	54	1651	N	C	0.154
PLNJ	08/19/93	231	170	1670	N	D	0.488
PLNJ	08/20/93	232	42	1710	N	C	0.441
PLNJ	08/24/93	236	57	1721	N	D	0.841
PLNJ	08/25/93	237	770	1735	Y	D	0.351
PLNJ	08/25/93	237	305	1736	Y	D	0.415
PLNJ	08/26/93	238	784	1761	N	C	0.161
PLNJ	08/27/93	239	145	1751	N	D	1.775
PLNJ	08/30/93	242	794	1793	N	C	0.832
PLNJ	08/31/93	243	119	1789	N	C	0.809
PLNJ	09/01/93	244	179	1794	N	C	0.267
PLNJ	09/02/93	245	630	1795	N	D	0.272
PLNJ	09/03/93	246	188	1838	N	C	0.766
PLNJ	09/07/93	250	91	1855	N	C	1.150
PLNJ	09/08/93	251	302	1852	N	C	0.212
PLNJ	09/09/93	252	140	1860	N	D	0.635
PLNJ	09/10/93	253	780	1900	Y	C	0.447
PLNJ	09/10/93	253	867	1901	Y	C	0.470
PLNJ	09/13/93	256	766	1918	N	C	0.584
PLNJ	09/14/93	257	27	1914	N	C	0.540
PLNJ	09/15/93	258	106	1907	N	C	0.563
PLNJ	09/16/93	259	813	1958	N	D	0.160
PLNJ	09/17/93	260	925	1950	N	C	0.178
PLNJ	09/20/93	263	787	1957	N	C	0.256

1993 NMOC Data for Plainfield, NJ (PLNJ)

Site Code	Collection Date	Julian Date	Can #	Radian ID #	Duplicate	Radian Analysis Channel	NMOC ppmC
PLNJ	09/21/93	264	309	1942	Y	D	0.578
PLNJ	09/21/93	264	831	1943	Y	D	0.545
PLNJ	09/22/93	265	854	1980	N	C	0.186
PLNJ	09/23/93	266	798	1982	N	C	0.426
PLNJ	09/24/93	267	638	2024	N	D	0.070
PLNJ	09/27/93	270	156	2017	N	C	1.080
PLNJ	09/28/93	271	119	2031	N	D	0.241
PLNJ	09/29/93	272	36	2037	N	D	0.366
PLNJ	09/30/93	273	814	2044	Y	D	0.426
PLNJ	09/30/93	273	188	2045	Y	D	0.424

Bristol, Pennsylvania (P1PA)

1993 NMOC Program (AIRS #42-017-0012)

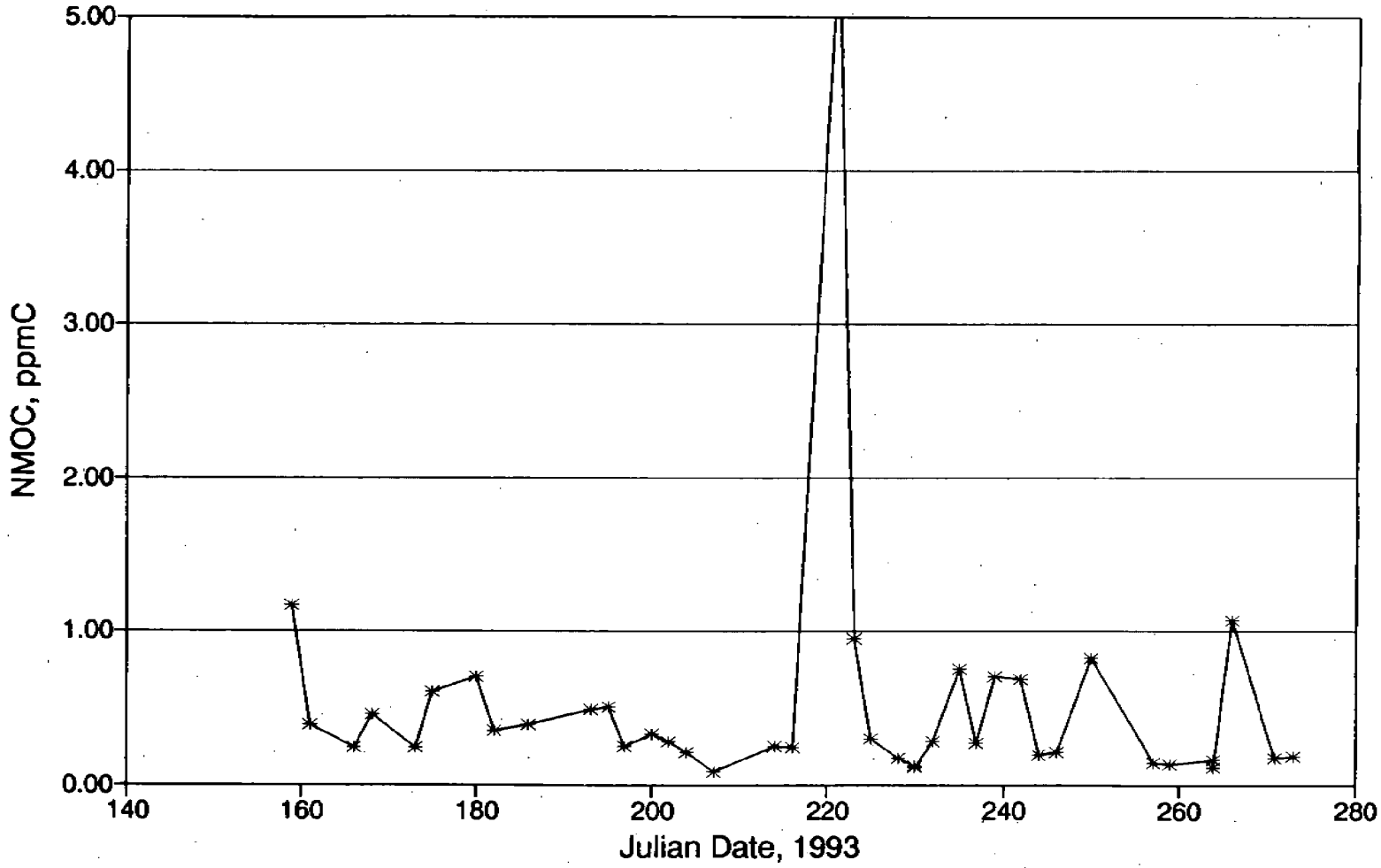

1993 NMOC Data for Bristol, PA (P1PA)

Site Code	Collection Date	Julian Date	Can #	Radian ID #	Duplicate	Radian Analysis Channel	NMOC ppmC
P1PA	06/08/93	159	915	1023	N	D	1.171
P1PA	06/10/93	161	681	1033	N	C	0.392
P1PA	06/15/93	166	19	1076	N	C	0.238
P1PA	06/17/93	168	84	1104	N	D	0.459
P1PA	06/22/93	173	46	1158	N	A	0.239
PIPA	06/24/93	175	118	1159	N	B	0.607
P1PA	06/29/93	180	658	1209	N	D	0.707
P1PA	07/01/93	182	129	1258	N	D	0.348
P1PA	07/05/93	186	929	1259	N	D	0.387
P1PA	07/12/93	193	621	1320	N	D	0.486
P1PA	07/14/93	195	927	1318	N	D	0.504
P1PA	07/16/93	197	772	1372	N	D	0.247
P1PA	07/19/93	200	115	1364	N	D	0.330
P1PA	07/21/93	202	686	1409	N	D	0.277
P1PA	07/23/93	204	800	1404	N	C	0.213
P1PA	07/26/93	207	119	1443	N	A	0.085
P1PA	08/02/93	214	929	1488	N	D	0.249
P1PA	08/04/93	216	177	1508	N	D	0.237
P1PA	08/09/93	221	899	1551	N	C	5.749
P1PA	08/11/93	223	129	1575	N	C	0.950
P1PA	08/13/93	225	43	1601	N	D	0.298
P1PA	08/16/93	228	154	1606	N	C	0.168
P1PA	08/18/93	230	406	1644	Y	D	0.119
P1PA	08/18/93	230	106	1645	Y	D	0.116
P1PA	08/20/93	232	635	1665	N	C	0.285
P1PA	08/23/93	235	723	1719	N	D	0.757
P1PA	08/25/93	237	109	1739	N	D	0.268
P1PA	08/27/93	239	154	1752	N	C	0.701
P1PA	08/30/93	242	656	1788	N	C	0.688
P1PA	09/01/93	244	686	1807	N	C	0.191
P1PA	09/03/93	246	627	1812	N	D	0.212
P1PA	09/07/93	250	182	1873	N	D	0.828
P1PA	09/14/93	257	89	1893	N	D	0.140
P1PA	09/16/93	259	92	1924	N	D	0.135
P1PA	09/21/93	264	902	1965	Y	D	0.159

1993 NMOC Data for Bristol, PA (P1PA)

Site Code	Collection Date	Julian Date	Can #	Radian ID #	Duplicate	Radian Analysis Channel	NMOC ppmC
P1PA	09/21/93	264	836	1966	Y	D	0.110
P1PA	09/23/93	266	838	1986	N	C	1.070
P1PA	09/28/93	271	804	2018	N	C	0.176
P1PA	09/30/93	273	82	2049	N	C	0.186

Norristown, Pennsylvania (P2PA)

1993 NMOC Program (AIRS #42-091-0013)

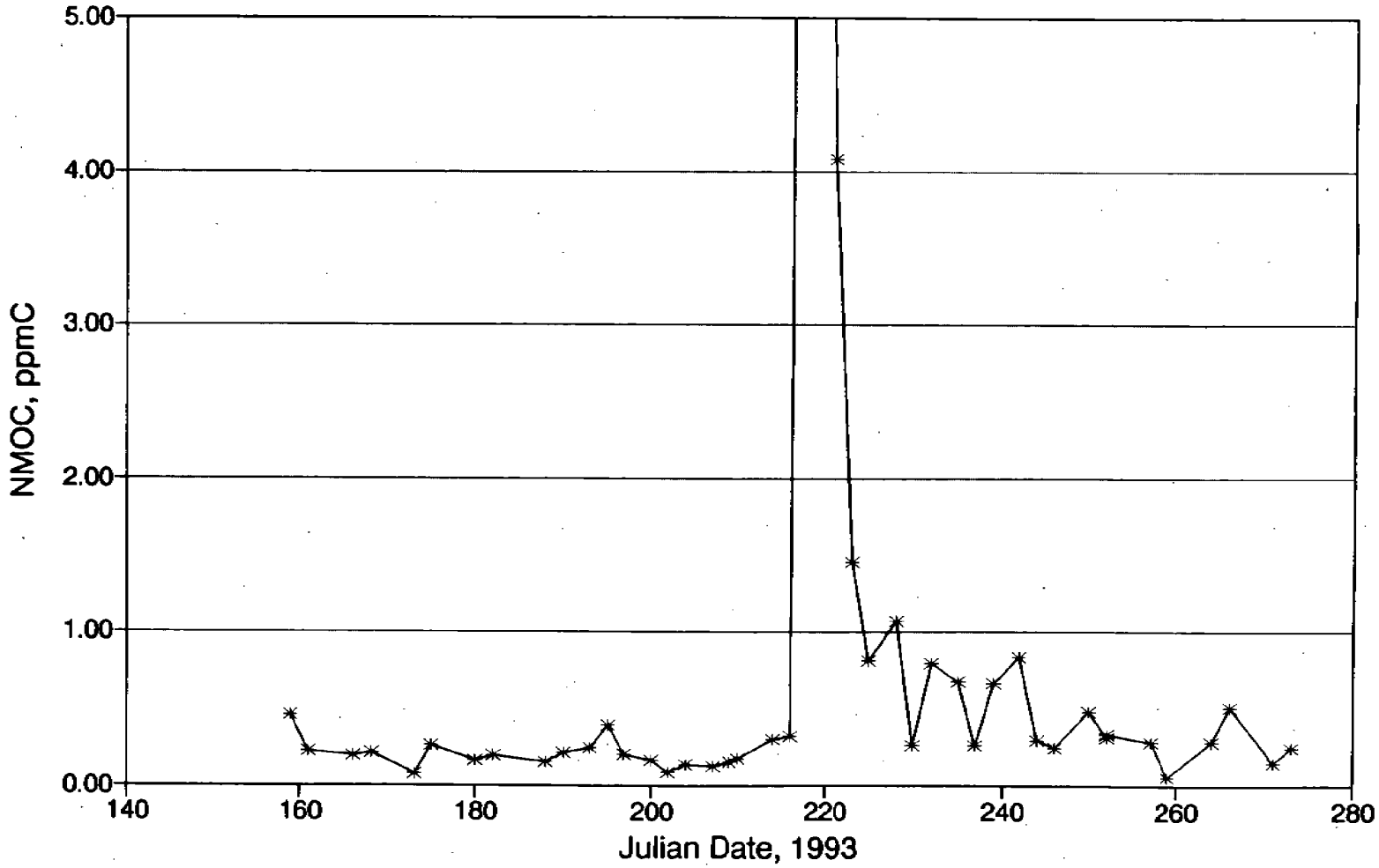

1993 NMOC Data for Norristown, PA (P2PA)

Site Code	Collection Date	Julian Date	Can #	Radian ID #	Duplicate	Radian Analysis Channel	NMOC ppmC
P2PA	06/08/93	159	692	1026	N	C	0.455
P2PA	06/10/93	161	170	1029	N	C	0.224
P2PA	06/15/93	166	694	1075	N	D	0.188
P2PA	06/17/93	168	41	1103	N	C	0.212
P2PA	06/22/93	173	911	1156	N	A	0.079
P2PA	06/24/93	175	70	1142	N	B	0.266
P2PA	06/29/93	180	156	1210	N	C	0.160
P2PA	07/01/93	182	773	1251	N	C	0.188
P2PA	07/07/93	188	915	1272	N	C	0.158
P2PA	07/09/93	190	764	1280	N	C	0.217
P2PA	07/12/93	193	150	1321	N	C	0.245
P2PA	07/14/93	195	826	1319	N	C	0.390
P2PA	07/16/93	197	649	1371	N	D	0.199
P2PA	07/19/93	200	52	1375	N	C	0.159
P2PA	07/21/93	202	674	1405	Y	D	0.089
P2PA	07/21/93	202	630	1406	Y	D	0.083
P2PA	07/23/93	204	702	1413	N	D	0.138
P2PA	07/26/93	207	705	1446	N	C	0.127
P2PA	07/28/93	209	80	1453	N	D	0.157
P2PA	07/30/93	210	131	1480	N	A	0.169
P2PA	08/02/93	214	9	1487	N	C	0.304
P2PA	08/04/93	216	771	1513	N	C	0.322
P2PA	08/06/93	218	640	1538	Y	C (VOID)	108.949
P2PA	08/06/93	218	91	1539	Y	C (VOID)	91.742
P2PA	08/09/93	221	183	1550	N	D	4.076
P2PA	08/11/93	223	767	1572	N	C	1.451
P2PA	08/13/93	225	66	1598	N	C	0.813
P2PA	08/16/93	228	794	1607	N	C	1.066
P2PA	08/18/93	230	687	1639	N	D	0.262
P2PA	08/20/93	232	143	1674	N	D	0.796
P2PA	08/23/93	235	900	1709	N	D	0.677
P2PA	08/25/93	237	767	1705	N	D	0.259
P2PA	08/27/93	239	46	1740	N	C	0.665
P2PA	08/30/93	242	22	1753	N	C	0.829
P2PA	09/01/93	244	147	1787	N	D	0.294

1993 NMOC Data for Norristown, PA (P2PA)

Site Code	Collection Date	Julian Date	Can #	Radian ID #	Duplicate	Radian Analysis Channel	NMOC ppmC
P2PA	09/03/93	246	41	1831	N	C	0.242
P2PA	09/07/93	250	916	1830	N	D	0.481
P2PA	09/09/93	252	660	1870	Y	D	0.307
P2PA	09/09/93	252	640	1871	Y	D	0.331
P2PA	09/14/93	257	911	1892	N	D	0.277
P2PA	09/16/93	259	803	1923	N	D	0.059
P2PA	09/21/93	264	770	1967	N	D	0.281
P2PA	09/23/93	266	301	1988	N	C	0.505
P2PA	09/28/93	271	35	2026	N	C	0.143
P2PA	09/30/93	273	843	2048	N	C	0.237

APPENDIX D

1993 NMOC MONITORING PROGRAM INVALIDATED AND MISSING SAMPLES

APPENDIX D

TABLE 1

1993 NMOC PRORAM

VOID OR INVALID SAMPLES

Site	Date	Description	Assigned
PLNJ	06/06/93	Timer malfunction	Equipment
PLNJ	06/10/93	Valve broke off canister	Equipment
PLNJ	06/11/93	Timer malfunction (electrical storm)	Equipment
PLNJ	06/14/93	Sampler fitting stripped	Equipment
PLNJ	06/15/93	Sampler fitting stripped	Equipment
PLNJ	06/16/93	Sampler fitting stripped	Equipment
LINY	07/02/93	Unknown	Unknown
PLNJ	07/02/93	Unknown	Unknown
P2PA	07/05/93	Sampler ran for 6 hours	Operator
P1PA	07/07/93	Sampler malfunction	Equipment
P1PA	07/09/93	Sampler malfunction	Equipment
LINY	07/16/93	Canister leak	Equipment
P1PA	07/28/93	Pump malfunction	Equipment
P1PA	07/30/93	Pump malfunction	Equipment
P1PA	08/06/93	Unknown	Unknown
P2PA	08/06/93	Contamination (Duplicate)	Operator
PLNJ	08/23/93	Timer malfunction	Equipment
P1PA	09/09/93	Timer programmed improperly	Operator

APPENDIX D
TABLE 2
1993 SNMOC PRORAM
VOID OR INVALID SAMPLES

Site	Date	Description	Assigned
B1AL	06/07/93	No sample received	Unknown
B2AL	06/07/93	No sample received	Unknown
B3AL	06/07/93	No sample received	Unknown
JUMX	06/07/93	No sample received	Unknown
JUMX	06/08/93	Canister received under vacuum	Operator
B3AL	06/16/93	Power failure at site	Equipment
JUMX	06/17/93	Timer malfunction (electrical storm)	Equipment
B1AL	06/18/93	Timer set in manual mode	Operator
B1AL	06/21/93	Unknown	Unknown
B3AL	06/28/93	Timer set in manual mode	Operator
B3AL	07/02/93	Duplicate port open during sampling	Operator
B3AL	07/08/93	Pump failure	Equipment
BMTX	07/08/93	No sample collected	Operator
B3AL	07/09/93	Pump failure	Equipment
BMTX	07/09/93	No sample collected	Operator
B3AL	07/12/93	Pump failure	Equipment
B3AL	07/13/93	Pump failure	Equipment
B3AL	07/26/93	Pump failure	Equipment
B3AL	07/27/93	Pump failure	Equipment
B3AL	07/28/93	Pump failure	Equipment
B3AL	07/29/93	Pump failure	Equipment
JUMX	08/04/93	No sample received	Unknown
B2AL	08/06/93	Canister valve not opened	Operator
B3AL	08/06/93	Pump failure	Equipment
B3AL	08/09/93	Pump failure	Equipment
FWTX	08/09/93	No sample received	Unknown

APPENDIX D

TABLE 2

1993 SNMOC PRORAM

VOID OR INVALID SAMPLES

Site	Date	Description	Assigned
JUMX	08/09/93	No sample received	Unknown
B3AL	08/10/93	Pump failure	Equipment
BMTX	08/10/93	No sample received	Unknown
B3AL	08/11/93	Pump failure	Equipment
B3AL	08/12/93	Pump failure	Equipment
FWTX	08/27/93	No sample collected	Holiday
JUMX	08/30/93	Unknown	Unknown
B1AL	09/07/93	Timer set in manual mode	Operator
JUMX	09/08/93	Canister received under vacuum	Operator
B3AL	09/10/93	Canister received under vacuum	Operator
B3AL	09/13/93	Canister sampled for two days	Operator
B3AL	09/14/93	Canister sampled for two days	Operator
EPTX	09/14/93	Canister sampled for two days	Operator
EPTX	09/15/93	Canister sampled for two days	Operator
JUMX	09/16/93	No sample received	Unknown
B2AL	09/22/93	Timer set in manual mode	Operator
BMTX	09/29/93	Canister valve stripped	Equipment
EPTX	09/30/93	No sample received	Unknown
JUMX	09/30/93	Timer malfunction	Equipment

APPENDIX E

PDFID INTEGRATOR PROGRAMMING INSTRUCTIONS

INTEGRATOR PROGRAMMING INSTRUCTIONS

Instructions for programming the integrators are as follows. Be sure to press **ENTER** after each key sequence.

Control Integrator

Oven Temp 90
Oven Temp Limit 405
Oven Temp ON
Oven Temp OFF
List Oven Temp
(A listing should say OvenTemp X°C Setpt 90°C Limit 405°C)
Oven Temp Initial Time 0.20
Oven Temp Initial Value 90
Oven Temp Pgrm Rate 30.00
Oven Temp Final Value 90.00
Oven Temp Final Time 4.00
Oven Temp Equil Time 1.00

Detector A ON
Signal A
Chart speed 4.00
%Offset 10
Zero
Attn 2^ 4

Run Time Annotation ON
Run Table Annotation ON
Clock Table Annotation OFF
Program Annotation OFF
Oven Temp Annotation OFF
Report Annotation OFF

Slave Integrator

Detector B ON
Signal B
Chart speed 4.00
%Offset 10
Zero
Attn 2^ 4

Run Time Annotation ON
Run Table Annotation ON
Clock Table Annotation OFF
Program Annotation OFF
Oven Temp Annotation OFF
(should say ***Warning***Oven Temp now owned by Chnl 2)
Report Annotation OFF

INTEGRATOR PROGRAMMING INSTRUCTIONS (Continued)

Slave Integrator

Flow B 30
Flow B Limit 500

Control Integrator

Valve 1 OFF
Valve 2 OFF
Valve 3 OFF
Valve 4 OFF
Valve 5 ON
Valve 6 OFF
Valve 7 OFF
Valve 8 OFF
Valve 9 OFF
Valve 10 OFF
Valve 11 OFF
Valve 12 OFF

Threshold 1
Peak Width 0.04

Slave Integrator

Threshold 1
Peak Width 0.04

Control Integrator

20 Valve 5 OFF
25 List Valve 5
30 Oven Temp Initial Value 30
35 Oven Temp OFF
40 Wait 2
60 Start
70 Oven Temp 90
80 Vale 5 ON

Sync ON

APPENDIX F

1993 NMOC DAILY CALIBRATION DATA

Table F-1. Daily Calibration Data Summary (Channel A)

Channel	Cal Date	Initial Zero A.C.	Final Zero A.C.	Initial Zero ppmC	Final Zero ppmC	Initial Cal Factor	Final Cal Factor	Cal Factor Drift	Cal Factor % Drift	Abs Cal Factor % Drift
A	06/21/93	3.23	3.23	0.0010	0.0010	0.000299	0.000299	0.000000	0.000000	0.000000
A	06/23/93	5.55	5.55	0.0018	0.0018	0.000323	0.000323	0.000000	0.000000	0.000000
A	06/24/93	8.77	8.77	0.0030	0.0030	0.000342	0.000342	0.000000	0.000000	0.000000
A	06/25/93	5.14	5.85	0.0017	0.0020	0.000330	0.000334	-0.000004	-1.180948	1.180948
A	06/29/93	1.27	2.57	0.0004	0.0008	0.000333	0.000330	0.000003	0.987272	0.987272
A	08/03/93	6.93	6.93	0.0021	0.0021	0.000310	0.000310	0.000000	0.000000	0.000000

Table F-2. Daily Calibration Data Summary (Channel B)

Channel	Cal Date	Initial Zero A.C.	Final Zero A.C.	Initial Zero ppmC	Final Zero ppmC	Initial Cal Factor	Final Cal Factor	Cal Factor Drift	Cal Factor % Drift	Abs Cal Factor % Drift
B	06/21/93	8.31	8.31	0.0026	0.0026	0.000317	0.000317	0.000000	0.000000	0.000000
B	06/24/93	5.63	5.63	0.0019	0.0019	0.000344	0.000344	0.000000	0.000000	0.000000
B	06/25/93	5.14	5.15	0.0017	0.0017	0.000336	0.000336	0.000000	0.090574	0.090574
B	08/03/93	9.06	9.06	0.0028	0.0028	0.000309	0.000309	0.000000	0.000000	0.000000

Table F-31. Daily Calibration Data Summary (Channel C)

Channel	Cal Date	Initial Zero A.C.	Final Zero A.C.	Initial Zero ppmC	Final Zero ppmC	Initial Cal Factor	Final Cal Factor	Cal Factor Drift	Cal Factor % Drift	Abs Cal Factor % Drift
C	06/09/93	2.57	2.57	0.0007	0.0007	0.000271	0.000271	0.000000	0.000000	0.000000
C	06/09/93	6.58	6.58	0.0018	0.0018	0.000270	0.000270	0.000000	0.000000	0.000000
C	06/11/93	5.34	5.16	0.0014	0.0014	0.000272	0.000275	-0.000003	-1.256415	1.256415
C	06/15/93	0.00	0.00	0.0000	0.0000	0.000314	0.000317	-0.000003	-1.009842	1.009842
C	06/15/93	0.00	2.95	0.0000	0.0009	0.000313	0.000315	-0.000002	-0.673519	0.673519
C	06/17/93	5.08	5.08	0.0016	0.0016	0.000316	0.000316	0.000000	0.000000	0.000000
C	06/17/93	3.71	2.28	0.0012	0.0007	0.000313	0.000319	-0.000006	-1.959761	1.959761
C	06/21/93	0.00	0.74	0.0000	0.0002	0.000310	0.000313	-0.000003	-1.000218	1.000218
C	06/30/93	0.27	0.27	0.0001	0.0001	0.000323	0.000323	0.000000	0.000000	0.000000
C	07/01/93	0.48	5.90	0.0002	0.0019	0.000323	0.000315	0.000008	2.481268	2.481268
C	07/06/93	0.65	2.18	0.0002	0.0007	0.000313	0.000315	-0.000002	-0.602790	0.602790
C	07/08/93	0.65	3.28	0.0002	0.0010	0.000315	0.000317	-0.000001	-0.474397	0.474397
C	07/09/93	0.88	0.88	0.0003	0.0003	0.000312	0.000312	0.000000	0.000000	0.000000
C	07/13/93	1.78	5.33	0.0006	0.0017	0.000313	0.000315	-0.000003	-0.808823	0.808823
C	07/16/93	2.92	6.17	0.0009	0.0020	0.000318	0.000317	0.000001	0.271831	0.271831
C	07/17/93	0.19	0.19	0.0001	0.0001	0.000312	0.000312	0.000000	0.000000	0.000000
C	07/21/93	6.08	2.29	0.0019	0.0007	0.000314	0.000317	-0.000003	-1.078139	1.078139
C	07/26/93	2.45	2.45	0.0008	0.0008	0.000324	0.000324	0.000000	0.000000	0.000000
C	07/27/93	1.83	1.83	0.0006	0.0006	0.000317	0.000317	0.000000	0.000000	0.000000
C	07/28/93	8.39	8.39	0.0026	0.0026	0.000311	0.000311	0.000000	0.000000	0.000000
C	07/29/93	2.84	2.84	0.0009	0.0009	0.000311	0.000311	0.000000	0.000000	0.000000
C	07/30/93	2.61	2.61	0.0008	0.0008	0.000310	0.000310	0.000000	0.000000	0.000000
C	08/04/93	0.00	7.38	0.0000	0.0023	0.000314	0.000314	-0.000000	-0.155450	0.155450
C	08/06/93	1.04	1.04	0.0003	0.0003	0.000310	0.000310	0.000000	0.000000	0.000000
C	08/09/93	0.53	1.88	0.0002	0.0006	0.000326	0.000315	0.000011	3.318182	3.318182
C	08/10/93	4.12	4.12	0.0013	0.0013	0.000312	0.000312	0.000000	0.000000	0.000000
C	08/11/93	9.42	7.21	0.0029	0.0023	0.000313	0.000318	-0.000006	-1.828840	1.828840
C	08/12/93	2.12	2.12	0.0007	0.0007	0.000313	0.000313	0.000000	0.000000	0.000000
C	08/13/93	5.57	5.93	0.0017	0.0019	0.000312	0.000313	-0.000001	-0.276591	0.276591
C	08/16/93	2.11	2.11	0.0007	0.0007	0.000316	0.000316	0.000000	0.000000	0.000000

Table F-31. Daily Calibration Data Summary (Channel C)

Channel	Cal Date	Initial Zero A.C.	Final Zero A.C.	Initial Zero ppmC	Final Zero ppmC	Initial Cal Factor	Final Cal Factor	Cal Factor Drift	Cal Factor % Drift	Abs Cal Factor % Drift
C	08/17/93	0.00	0.00	0.0000	0.0000	0.000310	0.000310	0.000000	0.000000	0.000000
C	08/18/93	5.70	5.70	0.0018	0.0018	0.000315	0.000315	0.000000	0.000000	0.000000
C	08/19/93	3.80	3.80	0.0012	0.0012	0.000312	0.000312	0.000000	0.000000	0.000000
C	08/23/93	6.44	7.95	0.0020	0.0027	0.000305	0.000334	-0.000029	-9.567978	9.567978
C	08/27/93	2.38	2.38	0.0007	0.0007	0.000308	0.000308	0.000000	0.000000	0.000000
C	08/28/93	3.13	3.13	0.0010	0.0010	0.000307	0.000307	0.000000	0.000000	0.000000
C	08/30/93	0.00	0.00	0.0000	0.0000	0.000316	0.000316	0.000000	0.000000	0.000000
C	08/30/93	2.76	2.76	0.0009	0.0009	0.000313	0.000313	0.000000	0.000000	0.000000
C	08/31/93	6.14	3.41	0.0019	0.0011	0.000312	0.000312	-0.000000	-0.042915	0.042915
C	09/01/93	4.05	2.78	0.0013	0.0009	0.000309	0.000310	-0.000000	-0.053477	0.053477
C	09/02/93	3.20	3.20	0.0010	0.0010	0.000308	0.000308	0.000000	0.000000	0.000000
C	09/07/93	7.14	0.70	0.0022	0.0002	0.000309	0.000308	0.000002	0.548014	0.548014
C	09/08/93	5.33	5.33	0.0016	0.0016	0.000306	0.000306	0.000000	0.000000	0.000000
C	09/09/93	3.02	3.02	0.0010	0.0010	0.000316	0.000316	0.000000	0.000000	0.000000
C	09/10/93	3.53	3.53	0.0011	0.0011	0.000318	0.000318	0.000000	0.000000	0.000000
C	09/14/93	1.16	1.16	0.0004	0.0004	0.000318	0.000318	0.000000	0.000000	0.000000
C	09/15/93	2.51	1.98	0.0008	0.0006	0.000316	0.000319	-0.000003	-0.980731	0.980731
C	09/16/93	2.06	2.06	0.0006	0.0006	0.000316	0.000316	0.000000	0.000000	0.000000
C	09/20/93	6.09	6.09	0.0019	0.0019	0.000317	0.000317	0.000000	0.000000	0.000000
C	09/22/93	5.02	5.02	0.0016	0.0016	0.000328	0.000328	0.000000	0.000000	0.000000
C	09/23/93	4.52	1.10	0.0015	0.0004	0.000324	0.000326	-0.000002	-0.585259	0.585259
C	09/29/93	7.52	7.52	0.0024	0.0024	0.000325	0.000325	0.000000	0.000000	0.000000
C	09/30/93	1.61	1.61	0.0005	0.0005	0.000322	0.000322	0.000000	0.000000	0.000000
C	10/01/93	3.47	1.80	0.0011	0.0006	0.000317	0.000322	-0.000005	-1.606890	1.606890
C	10/05/93	4.58	4.97	0.0015	0.0016	0.000322	0.000322	-0.000000	-0.091228	0.091228
C	10/06/93	5.32	5.82	0.0017	0.0019	0.000329	0.000328	0.000000	0.068029	0.068029

Table F-4. Daily Calibration Data Summary (Channel D)

Channel	Cal Date	Initial Zero A.C.	Final Zero A.C.	Initial Zero ppmC	Final Zero ppmC	Initial Cal Factor	Final Cal Factor	Cal Factor Drift	Cal Factor % Drift	Abs Cal Factor % Drift
D	06/11/93	2.08	2.22	0.0006	0.0006	0.000271	0.000271	0.000000	0.063887	0.063887
D	06/17/93	0.00	0.00	0.0000	0.0000	0.000314	0.000317	-0.000003	-0.856534	0.856534
D	06/21/93	0.00	0.00	0.0000	0.0000	0.000321	0.000316	0.000006	1.722211	1.722211
D	06/30/93	0.00	0.00	0.0000	0.0000	0.000314	0.000314	0.000000	0.000000	0.000000
D	07/01/93	0.00	0.00	0.0000	0.0000	0.000315	0.000319	-0.000003	-1.061562	1.061562
D	07/06/93	0.00	0.00	0.0000	0.0000	0.000314	0.000318	-0.000004	-1.220664	1.220664
D	07/08/93	0.00	2.19	0.0000	0.0007	0.000316	0.000320	-0.000003	-0.999863	0.999863
D	07/09/93	0.00	0.00	0.0000	0.0000	0.000313	0.000313	0.000000	0.000000	0.000000
D	07/13/93	0.00	0.00	0.0000	0.0000	0.000315	0.000318	-0.000003	-1.035978	1.035978
D	07/16/93	3.19	0.00	0.0010	0.0000	0.000320	0.000319	0.000001	0.227194	0.227194
D	07/17/93	0.00	0.00	0.0000	0.0000	0.000318	0.000318	0.000000	0.000000	0.000000
D	07/21/93	0.07	0.61	0.0000	0.0002	0.000315	0.000320	-0.000005	-1.500857	1.500857
D	07/26/93	0.00	0.00	0.0000	0.0000	0.000324	0.000324	0.000000	0.000000	0.000000
D	07/27/93	0.00	0.00	0.0000	0.0000	0.000324	0.000327	-0.000003	-0.936007	0.936007
D	07/28/93	3.98	3.98	0.0013	0.0013	0.000325	0.000325	0.000000	0.000000	0.000000
D	07/29/93	0.00	0.00	0.0000	0.0000	0.000321	0.000321	0.000000	0.000000	0.000000
D	07/30/93	2.51	2.51	0.0008	0.0008	0.000321	0.000321	0.000000	0.000000	0.000000
D	08/04/93	0.00	0.00	0.0000	0.0000	0.000320	0.000320	0.000000	0.000000	0.000000
D	08/06/93	1.78	1.78	0.0006	0.0006	0.000321	0.000321	0.000000	0.000000	0.000000
D	08/09/93	0.00	9.21	0.0000	0.0030	0.000322	0.000327	-0.000005	-1.515104	1.515104
D	08/10/93	5.94	5.94	0.0019	0.0019	0.000321	0.000321	0.000000	0.000000	0.000000
D	08/11/93	0.14	5.25	0.0000	0.0017	0.000322	0.000325	-0.000003	-0.931069	0.931069
D	08/12/93	0.00	0.00	0.0000	0.0000	0.000322	0.000322	0.000000	0.000000	0.000000
D	08/13/93	1.56	6.11	0.0005	0.0020	0.000323	0.000323	0.000000	0.143152	0.143152
D	08/16/93	6.76	6.76	0.0022	0.0022	0.000325	0.000325	0.000000	0.000000	0.000000
D	08/17/93	5.41	5.41	0.0017	0.0017	0.000322	0.000322	0.000000	0.000000	0.000000
D	08/18/93	4.36	4.36	0.0014	0.0014	0.000323	0.000323	0.000000	0.000000	0.000000
D	08/19/93	0.00	0.00	0.0000	0.0000	0.000321	0.000321	0.000000	0.000000	0.000000
D	08/23/93	0.00	5.56	0.0000	0.0018	0.000315	0.000325	-0.000011	-3.341090	3.341090
D	08/27/93	6.75	6.75	0.0021	0.0021	0.000316	0.000316	0.000000	0.000000	0.000000

Table F-4. Daily Calibration Data Summary (Channel D)

Channel	Cal Date	Initial Zero A.C.	Final Zero A.C.	Initial Zero ppmC	Final Zero ppmC	Initial Cal Factor	Final Cal Factor	Cal Factor Drift	Cal Factor % Drift	Abs Cal Factor % Drift
D	08/28/93	1.75	1.75	0.0006	0.0006	0.000317	0.000317	0.000000	0.000000	0.000000
D	08/31/93	0.00	9.74	0.0000	0.0031	0.000316	0.000317	-0.000002	-0.485572	0.485572
D	09/01/93	0.00	6.44	0.0000	0.0021	0.000314	0.000321	-0.000006	-2.042962	2.042962
D	09/02/93	0.00	0.00	0.0000	0.0000	0.000317	0.000317	0.000000	0.000000	0.000000
D	09/07/93	6.34	10.35	0.0020	0.0033	0.000316	0.000318	-0.000002	-0.556059	0.556059
D	09/08/93	0.00	0.00	0.0000	0.0000	0.000320	0.000320	0.000000	0.000000	0.000000
D	09/09/93	5.19	5.19	0.0017	0.0017	0.000320	0.000320	0.000000	0.000000	0.000000
D	09/10/93	0.00	0.00	0.0000	0.0000	0.000319	0.000319	0.000000	0.000000	0.000000
D	09/14/93	0.00	0.00	0.0000	0.0000	0.000321	0.000321	0.000000	0.000000	0.000000
D	09/15/93	0.00	2.23	0.0000	0.0007	0.000320	0.000322	-0.000002	-0.511390	0.511390
D	09/16/93	7.78	7.78	0.0025	0.0025	0.000318	0.000318	0.000000	0.000000	0.000000
D	09/17/93	0.00	0.00	0.0000	0.0000	0.000319	0.000319	0.000000	0.000000	0.000000
D	09/20/93	0.00	0.00	0.0000	0.0000	0.000320	0.000320	0.000000	0.000000	0.000000
D	09/22/93	2.86	2.86	0.0009	0.0009	0.000328	0.000328	0.000000	0.000000	0.000000
D	09/23/93	0.00	0.00	0.0000	0.0000	0.000327	0.000331	-0.000003	-0.976435	0.976435
D	09/29/93	7.91	7.91	0.0025	0.0025	0.000319	0.000319	0.000000	0.000000	0.000000
D	09/30/93	0.09	0.09	0.0000	0.0000	0.000327	0.000327	0.000000	0.000000	0.000000
D	10/01/93	0.00	0.00	0.0000	0.0000	0.000325	0.000331	-0.000006	-1.828712	1.828712
D	10/05/93	0.00	5.72	0.0000	0.0019	0.000326	0.000330	-0.000004	-1.193789	1.193789
D	10/06/93	0.07	3.51	0.0000	0.0012	0.000331	0.000334	-0.000003	-1.002740	1.002740

APPENDIX G

1993 NMOC IN-HOUSE QUALITY CONTROL SAMPLES

Table G-1. NMOC In-house Quality Control Samples

Collection Date	Julian Date Analyzed	Channel	QC ID Number	Calculated NMOC ppmC	Measured NMOC ppmC	NMOC Bias ppmC	NMOC Percent Bias
06/25/93	175	A	1141	1.112	1.030	-0.082	-7.374
06/29/93	179	A	1169	0.985	0.944	-0.041	-4.162

Table G-2. NMOC In-house Quality Control Samples

Collection Date	Julian Date Analyzed	Channel	QC ID Number	Calculated NMOC ppmC	Measured NMOC ppmC	NMOC Bias ppmC	NMOC Percent Bias
06/25/93	175	B	1141	1.112	1.007	-0.105	-9.442

Table G-3. NMOC In-house Quality Control Samples

Collection Date	Julian Date Analyzed	Channel	QC ID Number	Calculated NMOC ppmC	Measured NMOC ppmC	NMOC Bias ppmC	NMOC Percent Bias
06/15/93	166	C	1050	0.800	0.779	-0.021	-2.625
06/21/93	172	C	1092	0.982	0.877	-0.105	-10.692
07/01/93	181	C	1196	1.065	1.005	-0.060	-5.634
07/06/93	187	C	1224	0.958	0.911	-0.047	-4.958
07/08/93	189	C	1245	1.020	0.953	-0.068	-6.618
07/09/93	190	C	1263	1.142	1.090	-0.052	-4.553
07/13/93	194	C	1289	0.967	0.936	-0.031	-3.257
07/16/93	197	C	1324	1.097	1.075	-0.022	-2.005
07/21/93	202	C	1362	1.070	1.010	-0.060	-5.607
07/27/93	208	C	1418	0.830	0.778	-0.052	-6.265
07/30/93	211	C	1458	0.895	0.840	-0.055	-6.145
08/04/93	216	C	1492	0.864	0.804	-0.060	-6.944
08/06/93	218	C	1517	1.179	1.135	-0.044	-3.732
08/11/93	223	C	1555	1.200	1.065	-0.135	-11.250
08/13/93	225	C	1581	0.792	0.752	-0.040	-5.114
08/23/93	235	C	1675	1.024	0.928	-0.096	-9.375
08/31/93	243	C	1746	0.839	0.784	-0.055	-6.555
09/15/93	258	C	1881	0.921	0.895	-0.026	-2.823
10/06/93	279	C	2051	1.326	1.295	-0.031	-2.338

Table G-4. NMOC In-house Quality Control Samples

Collection Date	Julian Date Analyzed	Channel	QC ID Number	Calculated NMOC ppmC	Measured NMOC ppmC	NMOC Bias ppmC	NMOC Percent Bias
06/15/93	166	D	1050	0.880	0.802	-0.078	-8.864
06/21/93	172	D	1092	0.982	0.870	-0.112	-11.405
07/01/93	181	D	1196	1.065	0.978	-0.087	-8.169
07/06/93	187	D	1224	0.958	0.896	-0.063	-6.524
07/08/93	189	D	1245	1.020	0.938	-0.082	-8.039
07/09/93	190	D	1263	1.142	1.050	-0.092	-8.056
07/13/93	194	D	1289	0.967	0.894	-0.073	-7.549
07/16/93	197	D	1324	1.097	1.060	-0.037	-3.373
07/21/93	202	D	1362	1.070	1.045	-0.025	-2.336
07/27/93	208	D	1418	0.830	0.778	-0.052	-6.325
07/30/93	211	D	1458	0.895	0.833	-0.063	-6.983
08/04/93	216	D	1492	0.864	0.810	-0.054	-6.308
08/06/93	218	D	1517	1.179	1.145	-0.034	-2.884
08/11/93	223	D	1555	1.200	1.100	-0.100	-8.333
08/13/93	225	D	1581	0.792	0.746	-0.046	-5.871
08/23/93	235	D	1675	1.024	0.955	-0.070	-6.787
08/31/93	243	D	1746	0.839	0.814	-0.025	-2.980
09/15/93	258	D	1881	0.921	0.877	-0.044	-4.777
10/06/93	279	D	2051	1.326	1.295	-0.031	-2.338

APPENDIX H

1993 MULTIPLE DETECTOR SPECIATED THREE-HOUR SITE DATA SUMMARIES

TABLE H1. MULTIPLE DETECTOR SPECIATED UATMP DATA SUMMARY FOR B1AL

Sample Date	6/15/93		6/22/93		7/12/93		7/23/93		8/04/93	
Sample ID	1081		1132		1305		1419		1518	
Compound	Concentration, ppbv									
Acetylene	<1.00		<1.00		<1.00		<1.00		<1.00	
Propylene	0.52	(L)	1.35	(L)	0.76	(L)	3.54	(L)	0.59	(L)
Chloromethane	<0.20		<0.20		<0.20		<0.20		<0.20	
Vinyl Chloride	<0.20		<0.20		<0.20		<0.20		<0.20	
1,3-Butadiene	<0.10		<0.10		<0.10		0.30	(M)	<0.10	
Bromomethane	<0.20		<0.20		<0.20		<0.20		<0.20	
Chloroethane	<0.10		<0.10		<0.10		<0.10		<0.10	
Methylene Chloride	<0.11		<0.11		<0.11		<0.11		<0.11	
trans-1,2-Dichloroethylene	<0.04		<0.04		<0.04		<0.04		<0.04	
1,1-Dichloroethane	<0.04		<0.04		<0.04		<0.04		<0.04	
Chloroprene (A)	<0.06		<0.06		<0.06		<0.06		<0.06	
Bromochloromethane	<0.003		<0.003		<0.003		<0.003		<0.003	
Chloroform	0.05	(L)	0.08	(L)	0.04	(L)	0.09	(L)	0.04	(L)
1,2-Dichloroethane	<0.04		<0.04		<0.04		<0.04		<0.04	
1,1,1-Trichloroethane	0.37	(M)	0.62	(H)	0.39	(L)	0.71	(H)	0.34	(L)
Benzene	0.30	(H)	1.45	(H)	0.35	(H)	2.63	(H)	0.35	(H)
Carbon tetrachloride	0.26	(H)	0.34	(H)	0.36	(L)	0.37	(L)	0.32	(L)
1,2-Dichloropropane	<0.04		<0.04		<0.04		<0.04		<0.04	
Bromodichloromethane	<0.001		<0.001		<0.001		<0.001		<0.001	
Trichloroethylene	<0.004		<0.004		<0.004		<0.004		<0.004	
cis-1,3-Dichloropropylene	<0.04		<0.04		<0.04		<0.04		<0.04	
trans-1,3-Dichloropropylene	<0.04		<0.04		<0.04		<0.04		<0.04	
1,1,2-Trichloroethane	<0.04		<0.04		<0.04		<0.04		<0.04	
Toluene	0.55	(H)	2.96	(L)	0.75	(H)	4.78	(M)	0.90	(H)
Dibromochloromethane	<0.001		<0.001		<0.001		<0.001		<0.001	
n-Octane	<0.03		<0.03		<0.03		<0.03		0.04	(L)
Tetrachloroethylene	0.07	(L)	0.18	(L)	0.03	(L)	0.19	(L)	0.10	(L)
Chlorobenzene	<0.02		<0.02		<0.02		<0.02		<0.02	
Ethylbenzene	0.08	(H)	0.44	(L)	0.34	(L)	1.08	(H)	0.13	(H)
m/p-Xylene/Bromoform	0.31	(L)	1.85	(L)	1.66	(L)	5.02	(L)	0.64	(L)
Styrene	<0.02		0.12	(L)	0.06	(L)	<0.02		0.03	(H)
o-Xylene/1,1,2,2-Tetrachloroethane	<0.022		0.95	(L)	0.60	(L)	2.30	(L)	0.35	(L)
m-Dichlorobenzene	<0.02		<0.02		<0.02		<0.02		<0.02	
p-Dichlorobenzene	<0.09		<0.09		<0.09		<0.09		<0.09	
o-Dichlorobenzene	<0.02		<0.02		0.16	(H)	<0.02		<0.02	

(H) High confidence level (M) Medium confidence level (L) Low confidence level (Continued)
(A) Present but not quantitated due to interference

TABLE H1. B1AL (Continued)

Sample Date	8/13/93		8/13/93		8/13/93		8/20/93		9/02/93	
Sample ID	1619D		1619R		1620D		1676		1814	
Compound	Concentration, ppbv									
Acetylene	<1.00		<1.00		<1.00		<1.00		<1.00	
Propylene	1.00	(L)	0.83	(L)	0.76	(L)	2.93	(L)	0.46	(L)
Chloromethane	<0.20		<0.20		<0.20		<0.20		<0.20	
Vinyl Chloride	<0.20		<0.20		<0.20		<0.20		<0.20	
1,3-Butadiene	0.05	(H)	0.02	(L)	0.06	(H)	0.10	(M)	<0.10	
Bromomethane	<0.20		<0.20		<0.20		<0.20		<0.20	
Chloroethane	<0.10		<0.10		<0.10		<0.10		<0.10	
Methylene Chloride	<0.11		<0.11		<0.11		<0.11		<0.11	
trans-1,2-Dichloroethylene	<0.04		<0.04		<0.04		<0.04		<0.04	
1,1-Dichloroethane	<0.04		<0.04		<0.04		<0.04		<0.04	
Chloroprene (A)	<0.06		<0.06		<0.06		<0.06		<0.06	
Bromochloromethane	<0.003		<0.003		<0.003		<0.003		<0.003	
Chloroform	0.03	(L)	0.03	(L)	0.05	(L)	0.08	(L)	0.03	(L)
1,2-Dichloroethane	<0.04		<0.04		<0.04		<0.04		<0.04	
1,1,1-Trichloroethane	0.29	(M)	0.32	(L)	0.30	(M)	0.50	(H)	0.32	(L)
Benzene	0.54	(H)	0.65	(H)	0.64	(H)	1.09	(H)	0.21	(H)
Carbon tetrachloride	0.22	(L)	0.24	(H)	0.22	(M)	0.22	(L)	0.22	(L)
1,2-Dichloropropane	<0.04		<0.04		<0.04		<0.04		<0.04	
Bromodichloromethane	<0.001		<0.001		<0.001		<0.001		<0.001	
Trichloroethylene	<0.004		<0.004		<0.004		<0.004		<0.004	
cis-1,3-Dichloropropylene	<0.04		<0.04		<0.04		<0.04		<0.04	
trans-1,3-Dichloropropylene	<0.04		<0.04		<0.04		<0.04		<0.04	
1,1,2-Trichloroethane	<0.04		<0.04		<0.04		<0.04		<0.04	
Toluene	1.16	(H)	1.13	(H)	1.33	(H)	4.27	(H)	0.67	(H)
Dibromochloromethane	<0.001		<0.001		<0.001		<0.001		<0.001	
n-Octane	0.15	(L)	0.10	(H)	0.12	(H)	0.17	(L)	0.02	(L)
Tetrachloroethylene	0.07	(L)	0.08	(L)	0.08	(L)	0.18	(L)	0.05	(L)
Chlorobenzene	<0.02		<0.02		<0.02		<0.02		<0.02	
Ethylbenzene	0.20	(L)	0.19	(H)	0.24	(H)	0.65	(L)	0.18	(L)
m/p-Xylene/Bromoform	0.93	(L)	0.88	(L)	1.18	(L)	2.95	(L)	0.87	(L)
Styrene	0.06	(L)	0.06	(H)	0.08	(M)	0.17	(L)	<0.02	
o-Xylene/1,1,2,2-Tetrachloroethane	0.47	(L)	0.49	(L)	0.57	(L)	1.51	(L)	1.25	(L)
m-Dichlorobenzene	<0.02		<0.02		<0.02		<0.02		<0.02	
p-Dichlorobenzene	<0.09		<0.09		<0.09		<0.09		<0.09	
o-Dichlorobenzene	<0.02		<0.02		<0.02		<0.02		<0.02	

(H) High confidence level (M) Medium confidence level (L) Low confidence level (Continued)

R Replicate analysis D Duplicate sample

(A) Present but not quantitated due to interference

TABLE H2. MULTIPLE DETECTOR SPECIATED UATMP DATA SUMMARY FOR B2AL

Sample Date	6/15/93		6/22/93		7/12/93		7/23/93		8/03/93	
Sample ID	1080		1138		1306		1420		1514	
Compound	Concentration, ppbv									
Acetylene	<1.00		<1.00		<1.00		<1.00		<1.00	
Propylene	0.26	(L)	0.42	(L)	0.55	(L)	0.90	(L)	0.70	(L)
Chloromethane	<0.20		<0.20		<0.20		<0.20		<0.20	
Vinyl Chloride	<0.20		<0.20		<0.20		<0.20		<0.20	
1,3-Butadiene	<0.10		<0.10		0.06	(H)	<0.10		<0.10	
Bromomethane	<0.20		<0.20		<0.20		<0.20		<0.20	
Chloroethane	<0.10		<0.10		<0.10		<0.10		<0.10	
Methylene Chloride	<0.11		<0.11		<0.11		<0.11		<0.11	
trans-1,2-Dichloroethylene	<0.04		<0.04		<0.04		<0.04		<0.04	
1,1-Dichloroethane	<0.04		<0.04		<0.04		<0.04		<0.04	
Chloroprene (A)	<0.06		<0.06		<0.06		<0.06		<0.06	
Bromochloromethane	<0.003		<0.003		<0.003		<0.003		<0.003	
Chloroform	0.03	(L)	0.03	(L)	0.04	(L)	0.07	(L)	0.03	(L)
1,2-Dichloroethane	<0.04		<0.04		<0.04		<0.04		<0.04	
1,1,1-Trichloroethane	0.36	(L)	0.37	(L)	0.28	(L)	0.36	(L)	0.38	(L)
Benzene	0.18	(H)	0.24	(M)	0.27	(H)	0.59	(H)	0.30	(H)
Carbon tetrachloride	0.34	(H)	0.35	(L)	0.33	(L)	0.31	(L)	0.33	(L)
1,2-Dichloropropane	<0.04		<0.04		<0.04		<0.04		<0.04	
Bromodichloromethane	<0.001		<0.001		<0.001		<0.001		<0.001	
Trichloroethylene	<0.004		<0.004		<0.004		<0.004		<0.004	
cis-1,3-Dichloropropylene	<0.04		<0.04		<0.04		<0.04		<0.04	
trans-1,3-Dichloropropylene	<0.04		<0.04		<0.04		<0.04		<0.04	
1,1,2-Trichloroethane	<0.04		<0.04		<0.04		<0.04		<0.04	
Toluene	0.30	(H)	0.56	(M)	0.44	(H)	1.08	(H)	0.71	(H)
Dibromochloromethane	<0.001		<0.001		<0.001		<0.001		<0.001	
n-Octane	<0.03		<0.03		0.02	(H)	0.03	(H)	0.02	(H)
Tetrachloroethylene	0.05	(L)	0.03	(L)	0.04	(L)	0.06	(L)	0.04	(L)
Chlorobenzene	<0.02		<0.02		<0.02		<0.02		<0.02	
Ethylbenzene	0.04	(H)	<0.02		0.06	(H)	0.17	(H)	0.10	(H)
m/p-Xylene/Bromoform	0.17	(L)	0.41	(L)	0.30	(L)	0.67	(L)	0.47	(L)
Styrene	<0.02		<0.02		0.02	(M)	0.04	(H)	0.04	(H)
o-Xylene/1,1,2,2-Tetrachloroethane	0.11	(L)	<0.022		0.16	(L)	0.40	(L)	0.27	(L)
m-Dichlorobenzene	<0.02		<0.02		<0.02		<0.02		<0.02	
p-Dichlorobenzene	<0.09		<0.09		<0.09		<0.09		<0.09	
o-Dichlorobenzene	<0.02		<0.02		<0.02		<0.02		0.27	(M)

(H) High confidence level (M) Medium confidence level (L) Low confidence level (Continued)
(A) Present but not quantitated due to interference

TABLE H2. B2AL (Continued)

Sample Date	8/16/93		8/16/93		8/16/93		8/20/93		9/02/93	
Sample ID	1625D		1625R		1626D		1680		1813	
Compound	Concentration, ppbv									
Acetylene	<1.00		<1.00		<1.00		<1.00		<1.00	
Propylene	1.50	(L)	1.19	(L)	1.47	(L)	0.53	(L)	0.08	(L)
Chloromethane	<0.20		<0.20		<0.20		<0.20		<0.20	
Vinyl Chloride	<0.20		<0.20		<0.20		<0.20		<0.20	
1,3-Butadiene	0.09	(H)	0.05	(M)	0.09	(H)	<0.10		<0.10	
Bromomethane	<0.20		<0.20		<0.20		<0.20		<0.20	
Chloroethane	<0.10		<0.10		<0.10		<0.10		<0.10	
Methylene Chloride	<0.11		<0.11		<0.11		<0.11		<0.11	
trans-1,2-Dichloroethylene	<0.04		<0.04		<0.04		<0.04		<0.04	
1,1-Dichloroethane	<0.04		<0.04		<0.04		<0.04		<0.04	
Chloroprene (A)	<0.06		<0.06		<0.06		<0.06		<0.06	
Bromochloromethane	<0.003		<0.003		<0.003		<0.003		<0.003	
Chloroform	0.04	(L)	0.07	(L)	0.23	(L)	0.04	(L)	0.09	(L)
1,2-Dichloroethane	<0.04		<0.04		<0.04		<0.04		<0.04	
1,1,1-Trichloroethane	0.29	(L)	0.34	(L)	0.29	(L)	0.26	(L)	0.27	(L)
Benzene	0.44	(H)	0.61	(L)	0.41	(H)	0.18	(H)	0.09	(H)
Carbon tetrachloride	0.22	(H)	0.23	(L)	0.21	(L)	0.20	(L)	0.22	(L)
1,2-Dichloropropane	<0.04		<0.04		<0.04		<0.04		<0.04	
Bromodichloromethane	<0.001		<0.001		<0.001		<0.001		<0.001	
Trichloroethylene	<0.004		<0.004		<0.004		<0.004		<0.004	
cis-1,3-Dichloropropylene	<0.04		<0.04		<0.04		<0.04		<0.04	
trans-1,3-Dichloropropylene	<0.04		<0.04		<0.04		<0.04		<0.04	
1,1,2-Trichloroethane	<0.04		<0.04		<0.04		<0.04		<0.04	
Toluene	1.03	(H)	1.25	(H)	1.09	(H)	0.50	(H)	0.16	(H)
Dibromochloromethane	<0.001		<0.001		<0.001		<0.001		<0.001	
n-Octane	0.03	(L)	<0.03		0.02	(L)	0.02	(L)	<0.03	
Tetrachloroethylene	0.04	(L)	0.05	(L)	0.08	(L)	0.03	(L)	0.01	(L)
Chlorobenzene	<0.02		<0.02		<0.02		<0.02		<0.02	
Ethylbenzene	0.15	(L)	0.17	(L)	0.15	(H)	0.07	(L)	<0.02	
m/p-Xylene/Bromoform	0.62	(L)	0.72	(L)	0.63	(L)	0.33	(L)	0.14	(L)
Styrene	0.11	(H)	0.17	(M)	0.10	(H)	0.04	(L)	<0.02	
o-Xylene/1,1,2,2-Tetrachloroethane	0.36	(L)	0.55	(L)	0.36	(L)	0.22	(L)	<0.022	
m-Dichlorobenzene	<0.02		<0.02		<0.02		<0.02		<0.02	
p-Dichlorobenzene	<0.09		<0.09		<0.09		<0.09		<0.09	
o-Dichlorobenzene	<0.02		<0.02		<0.02		<0.02		<0.02	

(H) High confidence level (M) Medium confidence level (L) Low confidence level (Continued)
R Replicate analysis D Duplicate sample
(A) Present but not quantitated due to interference

TABLE H3. MULTIPLE DETECTOR SPECIATED UATMP DATA SUMMARY FOR B3AL

Sample Date	6/15/93		6/22/93		7/14/93		7/30/93		8/10/93	
Sample ID	1082		1134		1335		1486		1511	
Compound	Concentration, ppbv									
Acetylene	<1.00		<1.00		<1.00		<1.00		<1.00	
Propylene	<0.10		0.53	(L)	<0.10		0.48	(L)	<0.10	
Chloromethane	0.53	(L)	<0.20		0.72	(L)	<0.20		<0.20	
Vinyl Chloride	<0.20		<0.20		<0.20		<0.20		<0.20	
1,3-Butadiene	<0.10		<0.10		<0.10		<0.10		<0.10	
Bromomethane	<0.20		<0.20		<0.20		<0.20		<0.20	
Chloroethane	<0.10		<0.10		<0.10		<0.10		<0.10	
Methylene Chloride	<0.11		0.52	(H)	<0.11		<0.11		<0.11	
trans-1,2-Dichloroethylene	<0.04		<0.04		<0.04		<0.04		<0.04	
1,1-Dichloroethane	<0.04		<0.04		<0.04		<0.04		<0.04	
Chloroprene (A)	<0.06		<0.06		<0.06		<0.06		<0.06	
Bromochloromethane	<0.003		<0.003		<0.003		<0.003		<0.003	
Chloroform	0.10	(L)	0.04	(L)	0.05	(L)	0.03	(L)	0.02	(L)
1,2-Dichloroethane	<0.04		<0.04		<0.04		<0.04		<0.04	
1,1,1-Trichloroethane	0.30	(L)	0.45	(L)	0.29	(L)	0.55	(L)	0.43	(L)
Benzene	0.11	(H)	0.20	(H)	0.10	(H)	0.43	(H)	0.17	(H)
Carbon tetrachloride	0.30	(L)	0.30	(L)	0.31	(L)	0.46	(L)	0.38	(L)
1,2-Dichloropropane	<0.04		<0.04		<0.04		<0.04		<0.04	
Bromodichloromethane	<0.001		<0.001		<0.001		<0.001		<0.001	
Trichloroethylene	<0.004		<0.004		<0.004		<0.004		<0.004	
cis-1,3-Dichloropropylene	<0.04		<0.04		<0.04		<0.04		<0.04	
trans-1,3-Dichloropropylene	<0.04		<0.04		<0.04		<0.04		<0.04	
1,1,2-Trichloroethane	<0.04		<0.04		<0.04		<0.04		<0.04	
Toluene	0.23	(H)	0.53	(H)	0.22	(H)	0.96	(H)	0.33	(H)
Dibromochloromethane	<0.001		<0.001		<0.001		<0.001		<0.001	
n-Octane	<0.03		0.04	(H)	<0.03		0.05	(M)	<0.03	
Tetrachloroethylene	0.03	(L)	0.10	(L)	0.02	(L)	0.54	(L)	0.02	(L)
Chlorobenzene	<0.02		<0.02		<0.02		<0.02		<0.02	
Ethylbenzene	0.03	(H)	0.07	(H)	0.02	(M)	0.14	(H)	0.05	(L)
m/p-Xylene/Bromoform	0.15	(L)	0.34	(L)	0.09	(L)	0.62	(L)	0.19	(L)
Styrene	<0.02		0.05	(H)	<0.02		0.06	(H)	<0.02	
o-Xylene/1,1,2,2-Tetrachloroethane	0.09	(L)	0.18	(L)	0.06	(L)	0.37	(L)	0.11	(L)
m-Dichlorobenzene	<0.02		<0.02		<0.02		<0.02		<0.02	
p-Dichlorobenzene	<0.09		<0.09		<0.09		<0.09		<0.09	
o-Dichlorobenzene	<0.02		<0.02		<0.02		<0.02		<0.02	

(H) High confidence level (M) Medium confidence level (L) Low confidence level (Continued)
(A) Present but not quantitated due to interference

TABLE H3. B3AL (Continued)

Sample Date	8/17/93		8/17/93		8/17/93		8/20/93		9/02/93	
Sample ID	1634D		1634R		1635D		1688		1802	
Compound	Concentration, ppbv									
Acetylene	<1.00		<1.00		<1.00		<1.00		<1.00	
Propylene	1.40	(L)	1.46	(L)	1.84	(L)	<0.10		0.10	(L)
Chloromethane	<0.20		<0.20		<0.20		<0.20		<0.20	
Vinyl Chloride	<0.20		<0.20		<0.20		<0.20		<0.20	
1,3-Butadiene	<0.10		<0.10		<0.10		<0.10		<0.10	
Bromomethane	<0.20		<0.20		<0.20		<0.20		<0.20	
Chloroethane	<0.10		<0.10		<0.10		<0.10		<0.10	
Methylene Chloride	2.61	(L)	<0.11		3.09	(L)	<0.11		<0.11	
trans-1,2-Dichloroethylene	<0.04		<0.04		<0.04		<0.04		<0.04	
1,1-Dichloroethane	<0.04		<0.04		<0.04		<0.04		<0.04	
Chloroprene (A)	<0.06		<0.06		<0.06		<0.06		<0.06	
Bromochloromethane	<0.003		<0.003		<0.003		<0.003		<0.003	
Chloroform	0.06	(L)	0.09	(L)	0.06	(L)	0.05	(L)	0.02	(L)
1,2-Dichloroethane	<0.04		<0.04		<0.04		<0.04		<0.04	
1,1,1-Trichloroethane	0.70	(L)	0.83	(L)	0.69	(M)	0.72	(L)	0.26	(L)
Benzene	0.61	(H)	0.93	(L)	0.61	(H)	0.51	(H)	0.09	(H)
Carbon tetrachloride	0.24	(H)	0.29	(L)	0.24	(H)	0.26	(H)	0.22	(L)
1,2-Dichloropropane	<0.04		<0.04		<0.04		<0.04		<0.04	
Bromodichloromethane	<0.001		<0.001		<0.001		<0.001		<0.001	
Trichloroethylene	<0.004		<0.004		<0.004		<0.004		<0.004	
cis-1,3-Dichloropropylene	<0.04		<0.04		<0.04		<0.04		<0.04	
trans-1,3-Dichloropropylene	<0.04		<0.04		<0.04		<0.04		<0.04	
1,1,2-Trichloroethane	<0.04		<0.04		<0.04		<0.04		<0.04	
Toluene	1.81	(H)	2.45	(H)	1.73	(H)	1.61	(M)	0.24	(M)
Dibromochloromethane	<0.001		<0.001		<0.001		<0.001		<0.001	
n-Octane	0.03	(L)	<0.03		0.04	(L)	<0.03		<0.03	
Tetrachloroethylene	1.87	(L)	1.74	(L)	1.84	(L)	0.41	(L)	0.06	(L)
Chlorobenzene	<0.02		<0.02		<0.02		<0.02		<0.02	
Ethylbenzene	0.23	(M)	0.26	(H)	0.22	(M)	0.16	(L)	0.04	(L)
m/p-Xylene/Bromoform	0.93	(L)	1.15	(L)	0.92	(L)	0.65	(L)	0.12	(L)
Styrene	0.11	(L)	0.14	(H)	0.14	(H)	0.05	(L)	<0.02	
o-Xylene/1,1,2,2-Tetrachloroethane	0.45	(L)	0.61	(L)	0.49	(L)	<0.022		0.07	(L)
m-Dichlorobenzene	<0.02		<0.02		<0.02		<0.02		<0.02	
p-Dichlorobenzene	<0.09		<0.09		<0.09		<0.09		<0.09	
o-Dichlorobenzene	<0.02		<0.02		<0.02		<0.02		<0.02	

(H) High confidence level (M) Medium confidence level (L) Low confidence level (Continued)
R Replicate analysis D Duplicate sample
(A) Present but not quantitated due to interference

TABLE H4. MULTIPLE DETECTOR SPECIATED UATMP DATA SUMMARY FOR NWNJ

Sample Date	6/17/93		6/24/93		7/12/93		7/23/93		8/02/93	
Sample ID	1086		1151		1314		1444		1507	
Compound	Concentration, ppbv									
Acetylene	<1.00		<1.00		<1.00		<1.00		<1.00	
Propylene	1.26	(L)	2.70	(L)	2.75	(L)	1.13	(L)	4.99	(L)
Chloromethane	<0.20		<0.20		<0.20		<0.20		<0.20	
Vinyl Chloride	<0.20		<0.20		<0.20		<0.20		<0.20	
1,3-Butadiene	<0.10		<0.10		<0.10		0.03	(H)	0.10	(M)
Bromomethane	<0.20		<0.20		<0.20		<0.20		<0.20	
Chloroethane	<0.10		<0.10		<0.10		<0.10		<0.10	
Methylene Chloride	<0.11		<0.11		<0.11		<0.11		3.00	(M)
trans-1,2-Dichloroethylene	<0.04		<0.04		<0.04		<0.04		<0.04	
1,1-Dichloroethane	<0.04		<0.04		<0.04		<0.04		<0.04	
Chloroprene (A)	<0.06		<0.06		<0.06		<0.06		<0.06	
Bromochloromethane	<0.003		<0.003		<0.003		<0.003		<0.003	
Chloroform	0.04	(L)	0.17	(L)	0.04	(L)	0.02	(L)	0.05	(L)
1,2-Dichloroethane	<0.04		<0.04		<0.04		<0.04		<0.04	
1,1,1-Trichloroethane	1.23	(L)	1.84	(L)	1.39	(M)	1.34	(L)	1.53	(L)
Benzene	0.27	(H)	0.51	(H)	0.77	(H)	0.37	(L)	1.09	(H)
Carbon tetrachloride	0.36	(L)	0.39	(L)	0.36	(L)	0.34	(L)	0.38	(H)
1,2-Dichloropropane	<0.04		<0.04		<0.04		<0.04		<0.04	
Bromodichloromethane	<0.001		<0.001		<0.001		<0.001		<0.001	
Trichloroethylene	<0.004		0.61	(M)	<0.004		<0.004		<0.004	
cis-1,3-Dichloropropylene	<0.04		<0.04		<0.04		<0.04		<0.04	
trans-1,3-Dichloropropylene	<0.04		<0.04		<0.04		<0.04		<0.04	
1,1,2-Trichloroethane	<0.04		<0.04		<0.04		<0.04		<0.04	
Toluene	1.63	(H)	2.89	(H)	2.87	(H)	1.12	(H)	4.70	(H)
Dibromochloromethane	<0.001		<0.001		<0.001		<0.001		<0.001	
n-Octane	0.07	(H)	0.13	(M)	0.20	(H)	0.03	(H)	0.23	(H)
Tetrachloroethylene	0.26	(L)	0.40	(L)	0.20	(L)	0.12	(L)	0.27	(L)
Chlorobenzene	<0.02		<0.02		<0.02		<0.02		<0.02	
Ethylbenzene	0.21	(H)	0.31	(M)	0.47	(H)	0.12	(H)	0.49	(L)
m/p-Xylene/Bromoform	1.04	(L)	1.47	(L)	2.25	(L)	0.62	(L)	2.36	(L)
Styrene	0.05	(H)	0.07	(L)	0.08	(L)	0.06	(H)	0.17	(M)
o-Xylene/1,1,2,2-Tetrachloroethane	0.50	(L)	0.74	(L)	1.04	(L)	0.31	(L)	1.16	(L)
m-Dichlorobenzene	<0.02		<0.02		<0.02		<0.02		<0.02	
p-Dichlorobenzene	<0.09		<0.09		0.16	(H)	<0.09		<0.09	
o-Dichlorobenzene	<0.02		<0.02		<0.02		<0.02		<0.02	

(H) High confidence level (M) Medium confidence level (L) Low confidence level (Continued)

(A) Present but not quantitated due to interference

TABLE H4. NWNJ (Continued)

Sample Date	8/20/93		8/27/93		9/08/93		9/08/93		9/08/93	
Sample ID	1715		1754		1839D		1839R		1840D	
Compound	Concentration, ppbv									
Acetylene	<1.00		<1.00		<1.00		<1.00		<1.00	
Propylene	2.82	(L)	11.03	(L)	1.11	(L)	1.09	(L)	0.96	(L)
Chloromethane	<0.20		<0.20		<0.20		<0.20		<0.20	
Vinyl Chloride	<0.20		<0.20		<0.20		<0.20		<0.20	
1,3-Butadiene	0.11	(M)	0.30	(H)	<0.10		<0.10		<0.10	
Bromomethane	<0.20		<0.20		<0.20		<0.20		<0.20	
Chloroethane	<0.10		<0.10		<0.10		<0.10		<0.10	
Methylene Chloride	<0.11		<0.11		<0.11		<0.11		<0.11	
trans-1,2-Dichloroethylene	<0.04		<0.04		<0.04		<0.04		<0.04	
1,1-Dichloroethane	<0.04		<0.04		<0.04		<0.04		<0.04	
Chloroprene (A)	<0.06		<0.06		<0.06		<0.06		<0.06	
Bromochloromethane	<0.003		<0.003		<0.003		<0.003		<0.003	
Chloroform	0.06	(L)	0.20	(L)	0.04	(L)	<0.006		0.03	(L)
1,2-Dichloroethane	<0.04		<0.04		<0.04		<0.04		<0.04	
1,1,1-Trichloroethane	1.64	(L)	4.24	(H)	4.59	(M)	3.93	(H)	3.96	(M)
Benzene	0.89	(H)	2.11	(H)	0.30	(H)	0.25	(H)	0.22	(H)
Carbon tetrachloride	0.24	(L)	0.27	(L)	0.31	(L)	0.24	(L)	0.25	(L)
1,2-Dichloropropane	<0.04		<0.04		<0.04		<0.04		<0.04	
Bromodichloromethane	<0.001		<0.001		<0.001		<0.001		<0.001	
Trichloroethylene	0.42	(M)	0.33	(H)	<0.004		<0.004		<0.004	
cis-1,3-Dichloropropylene	<0.04		<0.04		<0.04		<0.04		<0.04	
trans-1,3-Dichloropropylene	<0.04		<0.04		<0.04		<0.04		<0.04	
1,1,2-Trichloroethane	<0.04		<0.04		<0.04		<0.04		<0.04	
Toluene	3.62	(H)	10.04	(H)	1.99	(H)	1.73	(H)	1.58	(L)
Dibromochloromethane	<0.001		<0.001		<0.001		<0.001		<0.001	
n-Octane	0.14	(L)	0.57	(H)	0.05	(L)	0.04	(L)	<0.03	
Tetrachloroethylene	0.22	(L)	1.33	(L)	0.35	(L)	0.29	(L)	0.28	(L)
Chlorobenzene	0.05	(H)	<0.02		<0.02		<0.02		<0.02	
Ethylbenzene	0.48	(M)	1.67	(H)	0.27	(H)	0.21	(H)	0.21	(L)
m/p-Xylene/Bromoform	2.37	(L)	8.41	(L)	1.23	(L)	1.02	(L)	1.05	(L)
Styrene	0.18	(H)	0.52	(L)	0.18	(H)	0.11	(H)	0.12	(L)
o-Xylene/1,1,2,2-Tetrachloroethane	1.03	(L)	3.92	(L)	0.64	(L)	0.41	(L)	0.40	(L)
m-Dichlorobenzene	<0.02		<0.02		<0.02		<0.02		<0.02	
p-Dichlorobenzene	<0.09		<0.09		0.16	(L)	<0.09		<0.09	
o-Dichlorobenzene	<0.02		<0.02		<0.02		<0.02		<0.02	

(H) High confidence level (M) Medium confidence level (L) Low confidence level (Continued)

R Replicate analysis D Duplicate sample

(A) Present but not quantitated due to interference

TABLE H5. MULTIPLE DETECTOR SPECIATED UATMP DATA SUMMARY FOR P1PA

Sample Date	6/24/93		6/29/93		7/12/93		8/02/93		8/09/93	
Sample ID	1159		1209		1320		1488		1551	
Compound	Concentration, ppbv									
Acetylene	<1.00		<1.00		<1.00		<1.00		<1.00	
Propylene	2.60	(L)	1.16	(L)	2.51	(L)	0.55	(L)	0.92	(L)
Chloromethane	<0.20		<0.20		<0.20		<0.20		<0.20	
Vinyl Chloride	<0.20		<0.20		<0.20		<0.20		<0.20	
1,3-Butadiene	0.11	(M)	<0.10		<0.10		0.07	(L)	<0.10	
Bromomethane	<0.20		<0.20		<0.20		<0.20		<0.20	
Chloroethane	<0.10		<0.10		<0.10		<0.10		<0.10	
Methylene Chloride	<0.11		<0.11		<0.11		<0.11		<0.11	
trans-1,2-Dichloroethylene	<0.04		<0.04		<0.04		<0.04		<0.04	
1,1-Dichloroethane	<0.04		<0.04		<0.04		<0.04		<0.04	
Chloroprene (A)	<0.06		<0.06		<0.06		<0.06		<0.06	
Bromochloromethane	<0.003		<0.003		<0.003		<0.003		<0.003	
Chloroform	0.08	(L)	0.26	(L)	0.08	(L)	0.06	(L)	0.04	(L)
1,2-Dichloroethane	<0.04		<0.04		<0.04		<0.04		<0.04	
1,1,1-Trichloroethane	3.28	(H)	4.00	(H)	2.78	(M)	0.56	(L)	0.39	(L)
Benzene	0.96	(H)	0.64	(H)	0.59	(H)	0.42	(H)	0.60	(L)
Carbon tetrachloride	0.37	(M)	0.38	(L)	0.35	(L)	0.31	(H)	0.22	(L)
1,2-Dichloropropane	<0.04		<0.04		<0.04		<0.04		<0.04	
Bromodichloromethane	<0.001		<0.001		<0.001		<0.001		<0.001	
Trichloroethylene	<0.004		<0.004		<0.004		<0.004		<0.004	
cis-1,3-Dichloropropylene	<0.04		<0.04		<0.04		<0.04		<0.04	
trans-1,3-Dichloropropylene	<0.04		<0.04		<0.04		<0.04		<0.04	
1,1,2-Trichloroethane	<0.04		<0.04		<0.04		<0.04		<0.04	
Toluene	3.18	(H)	12.16	(H)	1.59	(H)	1.04	(H)	5.82	(H)
Dibromochloromethane	<0.001		<0.001		<0.001		<0.001		<0.001	
n-Octane	0.10	(H)	0.06	(H)	0.10	(H)	0.04	(L)	<0.03	
Tetrachloroethylene	0.48	(L)	0.30	(L)	0.21	(L)	0.11	(L)	0.18	(L)
Chlorobenzene	<0.02		<0.02		<0.02		<0.02		<0.02	
Ethylbenzene	0.40	(H)	0.37	(M)	0.20	(H)	0.14	(L)	<0.02	
m/p-Xylene/Bromoform	2.15	(L)	1.87	(L)	0.85	(L)	0.63	(L)	1.27	(L)
Styrene	0.42	(M)	0.12	(L)	<0.02		<0.02		<0.02	
o-Xylene/1,1,2,2-Tetrachloroethane	1.11	(L)	0.84	(L)	0.37	(L)	0.30	(L)	<0.022	
m-Dichlorobenzene	<0.02		<0.02		<0.02		<0.02		<0.02	
p-Dichlorobenzene	<0.09		<0.09		<0.09		<0.09		<0.09	
o-Dichlorobenzene	<0.02		<0.02		0.11	(L)	<0.02		<0.02	

(H) High confidence level (M) Medium confidence level (L) Low confidence level (Continued)
(A) Present but not quantitated due to interference

TABLE H5. P1PA (Continued)

Sample Date	8/25/93		8/27/93		9/21/93		9/21/93		9/21/93	
Sample ID	1739		1752		1965D		1965R		1966D	
Compound	Concentration, ppbv									
Acetylene	<1.00		<1.00		<1.00		<1.00		<1.00	
Propylene	1.52	(L)	3.08	(L)	0.61	(L)	0.57	(L)	0.59	(L)
Chloromethane	0.79	(L)	<0.20		<0.20		<0.20		<0.20	
Vinyl Chloride	<0.20		<0.20		<0.20		<0.20		<0.20	
1,3-Butadiene	<0.10		0.10	(M)	<0.10		<0.10		<0.10	
Bromomethane	<0.20		<0.20		<0.20		<0.20		<0.20	
Chloroethane	<0.10		<0.10		<0.10		<0.10		<0.10	
Methylene Chloride	<0.11		<0.11		<0.11		<0.11		<0.11	
trans-1,2-Dichloroethylene	<0.04		<0.04		<0.04		<0.04		<0.04	
1,1-Dichloroethane	<0.04		<0.04		<0.04		<0.04		<0.04	
Chloroprene (A)	<0.06		<0.06		<0.06		<0.06		<0.06	
Bromochloromethane	<0.003		<0.003		<0.003		<0.003		<0.003	
Chloroform	0.06	(L)	0.24	(L)	0.02	(L)	0.02	(L)	0.04	(L)
1,2-Dichloroethane	<0.04		<0.04		<0.04		<0.04		<0.04	
1,1,1-Trichloroethane	0.56	(L)	1.70	(M)	0.26	(L)	0.30	(L)	0.35	(L)
Benzene	0.55	(H)	1.26	(H)	0.26	(H)	0.26	(H)	0.26	(H)
Carbon tetrachloride	0.23	(L)	0.25	(L)	0.20	(L)	0.22	(L)	0.22	(L)
1,2-Dichloropropane	<0.04		<0.04		<0.04		<0.04		<0.04	
Bromodichloromethane	<0.001		<0.001		<0.001		<0.001		<0.001	
Trichloroethylene	<0.004		<0.004		<0.004		<0.004		<0.004	
cis-1,3-Dichloropropylene	<0.04		<0.04		<0.04		<0.04		<0.04	
trans-1,3-Dichloropropylene	<0.04		<0.04		<0.04		<0.04		<0.04	
1,1,2-Trichloroethane	<0.04		<0.04		<0.04		<0.04		<0.04	
Toluene	1.16	(H)	4.59	(H)	0.70	(H)	0.77	(H)	2.28	(H)
Dibromochloromethane	<0.001		<0.001		<0.001		<0.001		<0.001	
n-Octane	<0.03		0.17	(H)	<0.03		0.03	(L)	<0.03	
Tetrachloroethylene	0.15	(L)	0.44	(L)	0.20	(L)	0.28	(L)	0.26	(L)
Chlorobenzene	<0.02		0.04	(L)	<0.02		<0.02		<0.02	
Ethylbenzene	<0.02		0.61	(H)	0.09	(M)	0.10	(L)	0.16	(L)
m/p-Xylene/Bromoform	0.53	(L)	2.92	(L)	0.45	(L)	0.51	(L)	0.67	(L)
Styrene	<0.02		0.18	(H)	<0.02		<0.02		0.04	(L)
o-Xylene/1,1,2,2-Tetrachloroethane	<0.022		1.49	(L)	0.31	(L)	0.33	(L)	0.32	(L)
m-Dichlorobenzene	<0.02		<0.02		<0.02		<0.02		<0.02	
p-Dichlorobenzene	<0.09		<0.09		<0.09		<0.09		<0.09	
o-Dichlorobenzene	<0.02		<0.02		<0.02		<0.02		<0.02	

(H) High confidence level (M) Medium confidence level (L) Low confidence level (Continued)
R Replicate analysis D Duplicate sample
(A) Present but not quantitated due to interference

TABLE H6. MULTIPLE DETECTOR SPECIATED UATMP DATA SUMMARY FOR P2PA

Sample Date	6/24/93		6/29/93		7/12/93		7/28/93		8/02/93	
Sample ID	1142		1210		1321		1453		1487	
Compound	Concentration, ppbv									
Acetylene	<1.00		<1.00		<1.00		<1.00		<1.00	
Propylene	1.24	(L)	0.46	(L)	1.02	(L)	0.33	(L)	3.73	(L)
Chloromethane	<0.20		<0.20		<0.20		<0.20		<0.20	
Vinyl Chloride	<0.20		<0.20		<0.20		<0.20		<0.20	
1,3-Butadiene	0.08	(H)	0.03	(H)	<0.10		<0.10		<0.10	
Bromomethane	<0.20		<0.20		<0.20		<0.20		<0.20	
Chloroethane	<0.10		<0.10		<0.10		<0.10		<0.10	
Methylene Chloride	<0.11		<0.11		<0.11		<0.11		<0.11	
trans-1,2-Dichloroethylene	<0.04		<0.04		<0.04		<0.04		<0.04	
1,1-Dichloroethane	<0.04		<0.04		<0.04		<0.04		<0.04	
Chloroprene (A)	<0.06		<0.06		<0.06		<0.06		<0.06	
Bromochloromethane	<0.003		<0.003		<0.003		<0.003		<0.003	
Chloroform	0.09	(L)	0.07	(L)	0.08	(L)	0.06	(L)	0.04	(L)
1,2-Dichloroethane	<0.04		<0.04		<0.04		<0.04		<0.04	
1,1,1-Trichloroethane	1.10	(M)	1.02	(L)	0.45	(L)	1.50	(M)	0.45	(L)
Benzene	0.58	(H)	0.34	(H)	0.55	(H)	0.29	(H)	0.59	(H)
Carbon tetrachloride	0.33	(M)	0.38	(L)	0.35	(M)	0.33	(L)	0.35	(H)
1,2-Dichloropropane	<0.04		<0.04		<0.04		<0.04		<0.04	
Bromodichloromethane	<0.001		<0.001		<0.001		<0.001		<0.001	
Trichloroethylene	0.35	(H)	0.53	(H)	<0.004		0.19	(L)	<0.004	
cis-1,3-Dichloropropylene	<0.04		<0.04		<0.04		<0.04		<0.04	
trans-1,3-Dichloropropylene	<0.04		<0.04		<0.04		<0.04		<0.04	
1,1,2-Trichloroethane	<0.04		<0.04		<0.04		<0.04		<0.04	
Toluene	2.20	(H)	1.05	(H)	1.16	(H)	0.65	(H)	1.19	(H)
Dibromochloromethane	<0.001		<0.001		<0.001		<0.001		<0.001	
n-Octane	0.05	(L)	0.03	(L)	0.03	(H)	0.02	(L)	0.04	(M)
Tetrachloroethylene	0.30	(L)	0.22	(L)	0.18	(L)	0.09	(L)	0.11	(L)
Chlorobenzene	<0.02		<0.02		<0.02		<0.02		<0.02	
Ethylbenzene	0.32	(H)	0.13	(H)	0.15	(H)	0.10	(H)	0.14	(H)
m/p-Xylene/Bromoform	1.50	(L)	0.73	(L)	0.75	(L)	0.44	(L)	0.54	(L)
Styrene	0.06	(L)	0.04	(H)	0.02	(L)	<0.02		<0.02	
o-Xylene/1,1,2,2-Tetrachloroethane	0.78	(L)	0.40	(L)	0.41	(L)	0.30	(L)	0.39	(L)
m-Dichlorobenzene	<0.02		<0.02		<0.02		<0.02		<0.02	
p-Dichlorobenzene	0.25	(L)	0.19	(H)	0.14	(M)	0.10	(M)	0.43	(H)
o-Dichlorobenzene	0.10	(L)	<0.02		<0.02		<0.02		0.19	(L)

(H) High confidence level (M) Medium confidence level (L) Low confidence level (Continued)
(A) Present but not quantitated due to interference

TABLE H6. P2PA (Continued)

Sample Date	8/27/93		8/23/93		9/09/93		9/09/93		9/09/93	
Sample ID	1705		1709		1870D		1870R		1871D	
Compound	Concentration, ppbv									
Acetylene	<1.00		<1.00		<1.00		<1.00		<1.00	
Propylene	0.78	(L)	1.71	(L)	1.75	(L)	1.45	(L)	1.41	(L)
Chloromethane	<0.20		0.42	(L)	<0.20		<0.20		<0.20	
Vinyl Chloride	<0.20		<0.20		<0.20		<0.20		<0.20	
1,3-Butadiene	0.05	(L)	<0.10		0.07	(H)	0.08	(H)	0.08	(H)
Bromomethane	<0.20		<0.20		<0.20		<0.20		<0.20	
Chloroethane	<0.10		<0.10		<0.10		<0.10		<0.10	
Methylene Chloride	<0.11		<0.11		<0.11		<0.11		<0.11	
trans-1,2-Dichloroethylene	<0.04		<0.04		<0.04		<0.04		<0.04	
1,1-Dichloroethane	<0.04		<0.04		<0.04		<0.04		<0.04	
Chloroprene (A)	<0.06		<0.06		<0.06		<0.06		<0.06	
Bromochloromethane	<0.003		<0.003		<0.003		<0.003		<0.003	
Chloroform	0.07	(L)	0.10	(L)	0.05	(L)	0.04	(L)	0.07	(L)
1,2-Dichloroethane	<0.04		<0.04		<0.04		<0.04		<0.04	
1,1,1-Trichloroethane	0.91	(M)	0.59	(L)	0.69	(L)	0.63	(L)	0.67	(L)
Benzene	0.63	(H)	0.52	(L)	0.79	(H)	0.85	(L)	0.77	(H)
Carbon tetrachloride	0.27	(L)	0.25	(L)	0.25	(M)	0.24	(L)	0.24	(M)
1,2-Dichloropropane	<0.04		<0.04		<0.04		<0.04		<0.04	
Bromodichloromethane	<0.001		<0.001		<0.001		<0.001		<0.001	
Trichloroethylene	<0.004		<0.004		<0.004		<0.004		<0.004	
cis-1,3-Dichloropropylene	<0.04		<0.04		<0.04		<0.04		<0.04	
trans-1,3-Dichloropropylene	<0.04		<0.04		<0.04		<0.04		<0.04	
1,1,2-Trichloroethane	<0.04		<0.04		<0.04		<0.04		<0.04	
Toluene	1.64	(H)	4.40	(L)	2.38	(H)	2.30	(M)	2.32	(H)
Dibromochloromethane	<0.001		<0.001		<0.001		<0.001		<0.001	
n-Octane	0.07	(H)	<0.03		0.09	(M)	<0.03		0.05	(H)
Tetrachloroethylene	0.14	(L)	0.41	(L)	0.73	(L)	0.50	(L)	0.72	(L)
Chlorobenzene	0.04	(M)	<0.02		0.02	(M)	<0.02		<0.02	
Ethylbenzene	0.23	(H)	0.20	(L)	0.29	(H)	0.33	(H)	0.28	(H)
m/p-Xylene/Bromoform	1.10	(L)	0.90	(L)	1.46	(L)	1.44	(L)	1.40	(L)
Styrene	<0.02		<0.02		0.10	(M)	<0.02		0.12	(H)
o-Xylene/1,1,2,2-Tetrachloroethane	0.78	(L)	0.57	(L)	0.75	(L)	0.58	(L)	0.72	(M)
m-Dichlorobenzene	<0.02		0.52	(L)	<0.02		<0.02		<0.02	
p-Dichlorobenzene	<0.09		<0.09		<0.09		<0.09		<0.09	
o-Dichlorobenzene	<0.02		<0.02		<0.02		<0.02		<0.02	

(H) High confidence level (M) Medium confidence level (L) Low confidence level (Continued)
R Replicate analysis D Duplicate sample
(A) Present but not quantitated due to interference

TABLE H7. MULTIPLE DETECTOR SPECIATED UATMP DATA SUMMARY FOR PLNJ

Sample Date	6/17/93		6/24/93		7/15/93		7/23/93		8/02/93	
Sample ID	1127		1186		1360		1437		1506	
Compound	Concentration, ppbv									
Acetylene	<1.00		<1.00		<1.00		<1.00		<1.00	
Propylene	0.85	(L)	1.98	(L)	0.46	(L)	<0.10		3.16	(L)
Chloromethane	0.47	(L)	<0.20		0.70	(L)	<0.20		<0.20	
Vinyl Chloride	<0.20		<0.20		<0.20		<0.20		<0.20	
1,3-Butadiene	<0.10		<0.10		<0.10		<0.10		0.10	(L)
Bromomethane	<0.20		<0.20		<0.20		<0.20		<0.20	
Chloroethane	<0.10		<0.10		<0.10		<0.10		<0.10	
Methylene Chloride	<0.11		<0.11		<0.11		<0.11		<0.11	
trans-1,2-Dichloroethylene	<0.04		<0.04		<0.04		<0.04		<0.04	
1,1-Dichloroethane	<0.04		<0.04		<0.04		<0.04		<0.04	
Chloroprene (A)	<0.06		<0.06		<0.06		<0.06		<0.06	
Bromochloromethane	<0.003		<0.003		<0.003		<0.003		<0.003	
Chloroform	0.03	(L)	0.14	(L)	0.03	(L)	0.03	(L)	0.08	(L)
1,2-Dichloroethane	<0.04		<0.04		<0.04		<0.04		<0.04	
1,1,1-Trichloroethane	0.74	(L)	0.71	(L)	0.42	(M)	0.30	(L)	0.80	(H)
Benzene	0.33	(H)	0.75	(H)	0.26	(H)	0.18	(H)	1.21	(H)
Carbon tetrachloride	0.28	(L)	0.28	(L)	0.30	(L)	0.28	(L)	0.32	(L)
1,2-Dichloropropane	<0.04		<0.04		<0.04		<0.04		<0.04	
Bromodichloromethane	<0.001		<0.001		<0.001		<0.001		<0.001	
Trichloroethylene	<0.004		<0.004		<0.004		<0.004		<0.004	
cis-1,3-Dichloropropylene	<0.04		<0.04		<0.04		<0.04		<0.04	
trans-1,3-Dichloropropylene	<0.04		<0.04		<0.04		<0.04		<0.04	
1,1,2-Trichloroethane	<0.04		<0.04		<0.04		<0.04		<0.04	
Toluene	1.41	(H)	2.61	(H)	0.63	(H)	0.45	(H)	4.69	(H)
Dibromochloromethane	<0.001		<0.001		<0.001		<0.001		<0.001	
n-Octane	0.05	(H)	0.06	(L)	0.03	(M)	<0.03		0.15	(H)
Tetrachloroethylene	0.16	(L)	0.23	(L)	0.15	(L)	0.11	(L)	0.34	(L)
Chlorobenzene	<0.02		<0.02		<0.02		<0.02		<0.02	
Ethylbenzene	0.12	(M)	0.33	(H)	0.08	(H)	0.07	(H)	0.58	(H)
m/p-Xylene/Bromoform	0.54	(L)	1.50	(L)	0.37	(L)	0.28	(L)	2.89	(L)
Styrene	<0.02		0.10	(M)	<0.02		<0.02		0.14	(L)
o-Xylene/1,1,2,2-Tetrachloroethane	0.33	(L)	0.78	(L)	0.25	(L)	0.16	(L)	1.51	(L)
m-Dichlorobenzene	<0.02		<0.02		<0.02		<0.02		<0.02	
p-Dichlorobenzene	<0.09		<0.09		<0.09		<0.09		0.28	(H)
o-Dichlorobenzene	<0.02		0.06	(L)	<0.02		<0.02		<0.02	

(H) High confidence level (M) Medium confidence level (L) Low confidence level (Continued)
(A) Present but not quantitated due to interference

TABLE H7. PLNJ (Continued)

Sample Date	8/24/93		8/27/93		9/10/93		9/10/93		9/10/93	
Sample ID	1721		1751		1900D		1900R		1901D	
Compound	Concentration, ppbv									
Acetylene	<1.00		<1.00		<1.00		<1.00		<1.00	
Propylene	5.60	(L)	7.52	(L)	3.29	(L)	3.12	(L)	3.62	(L)
Chloromethane	<0.20		<0.20		<0.20		<0.20		<0.20	
Vinyl Chloride	<0.20		<0.20		<0.20		<0.20		<0.20	
1,3-Butadiene	0.22	(M)	0.31	(H)	0.11	(H)	0.09	(M)	0.15	(H)
Bromomethane	<0.20		<0.20		<0.20		<0.20		<0.20	
Chloroethane	<0.10		<0.10		<0.10		<0.10		<0.10	
Methylene Chloride	<0.11		3.28	(M)	<0.11		<0.11		<0.11	
trans-1,2-Dichloroethylene	<0.04		<0.04		<0.04		<0.04		<0.04	
1,1-Dichloroethane	<0.04		<0.04		<0.04		<0.04		<0.04	
Chloroprene (A)	<0.06		<0.06		<0.06		<0.06		<0.06	
Bromochloromethane	<0.003		<0.003		<0.003		<0.003		<0.003	
Chloroform	0.09	(L)	0.28	(L)	0.05	(L)	0.02	(L)	0.05	(L)
1,2-Dichloroethane	<0.04		<0.04		<0.04		<0.04		<0.04	
1,1,1-Trichloroethane	1.73	(L)	4.07	(H)	0.60	(H)	0.48	(L)	0.52	(M)
Benzene	1.40	(L)	3.09	(H)	1.20	(H)	1.06	(H)	1.02	(H)
Carbon tetrachloride	0.26	(L)	0.26	(L)	0.26	(L)	0.23	(M)	0.22	(L)
1,2-Dichloropropane	<0.04		<0.04		<0.04		<0.04		<0.04	
Bromodichloromethane	<0.001		<0.001		<0.001		<0.001		<0.001	
Trichloroethylene	<0.004		<0.004		<0.004		<0.004		<0.004	
cis-1,3-Dichloropropylene	<0.04		<0.04		<0.04		<0.04		<0.04	
trans-1,3-Dichloropropylene	<0.04		<0.04		<0.04		<0.04		<0.04	
1,1,2-Trichloroethane	<0.04		<0.04		<0.04		<0.04		<0.04	
Toluene	4.63	(L)	15.18	(H)	4.69	(H)	3.80	(M)	4.03	(H)
Dibromochloromethane	<0.001		<0.001		<0.001		<0.001		<0.001	
n-Octane	<0.03		<0.03		0.09	(L)	<0.03		0.10	(L)
Tetrachloroethylene	0.19	(L)	0.74	(M)	0.15	(L)	0.11	(L)	0.14	(L)
Chlorobenzene	<0.02		<0.02		<0.02		<0.02		<0.02	
Ethylbenzene	0.50	(L)	1.47	(H)	0.49	(L)	0.34	(L)	0.38	(L)
m/p-Xylene/Bromoform	2.52	(L)	7.08	(L)	2.32	(L)	1.61	(L)	1.83	(L)
Styrene	<0.02		0.55	(H)	0.22	(L)	0.28	(H)	0.17	(L)
o-Xylene/1,1,2,2-Tetrachloroethane	1.58	(L)	3.16	(L)	1.20	(L)	1.98	(L)	0.88	(L)
m-Dichlorobenzene	<0.02		<0.02		<0.02		<0.02		<0.02	
p-Dichlorobenzene	<0.09		<0.09		<0.09		<0.09		<0.09	
o-Dichlorobenzene	<0.02		<0.02		<0.02		<0.02		<0.02	

(H) High confidence level (M) Medium confidence level (L) Low confidence level (Continued)
R Replicate analysis D Duplicate sample
(A) Present but not quantitated due to interference

APPENDIX I

AUDIT RESULTS

UNITED STATES ENVIRONMENTAL PROTECTION AGENCY
ATMOSPHERIC RESEARCH AND EXPOSURE ASSESSMENT LABORATORY
RESEARCH TRIANGLE PARK
NORTH CAROLINA 27711

November 15, 1993

MEMORANDUM

SUBJECT: NMOC Project Audit Results

FROM: Howard L. Crist
Quality Assurance Support Branch (MD-77B)

TO: Neil J. Berg, Jr.
OAQPS (MD-14)

The results of the audit canisters analyses by the Radian Corporation for the NMOC Program are listed in the attached tables. The results for the propane samples appear in Table No. 1. The percent difference (using means of reported data) for both samples are 3.6% and 4.5% from the expected concentrations. The results for the two multi-component hydrocarbon audit canisters are listed in Table No. 2. The percent differences for the two samples were similar ranging from -16% to 17% for NO. 1862 and -20% to 17% for NO. 1863. The data had a consistent negative bias. The analyses for the same compound at different concentrations in the two canisters showed good reproducibility and the overall results of the analyses of the audit samples indicated good relative accuracy.

Attachments

cc: William J. Mitchell (MD-77B)

Table No. 1 NMOC Project Audit Results

ppmC

Audit Sample No.	Reported[1]	Expected	Difference, %
1863	1.16	1.12	3.6
1864	0.69	0.66	4.5

[1] - Mean of data reported for four GC channels.

Table No. 2 NMOC Project Audit Results

ppbC

	Reported		Expected		Differences, %	
	1862	1865	1862	1865	1862	1865
Ethylene	14.7	27.8	16.8	30.9	-12	-10
Ethane	14.5	23.2	15.8	29.1	-8.2	-20
Propane	21.9	41.6	23.5	43.2	-6.8	-3.7
1-Butene	32.0	58.6	27.4	50.4	17	16
t-2-Butene	29.5	55.1	30.4	55.8	-3.0	-1.2
3-Methyl-1-Butene	38.2	70.7	42.1	77.4	-9.3	-82
1-Pentene	35.7	65.5	37.8	69.6	-5.6	-5.9
Isoprene	32.6	60.4	38.2	70.4	-15	-14
C-2-Pentene	33.8	61.7	37.0	68	-8.6	-9.3
2,2 Dimethylbutane	53.4	96.4	53.5	98.4	-0.2	-2.0
4-Methyl-1-Pentene	45.6	83.3	50.3	92.5	-9.3	-10
2,3-Dimethylbutane	48.5	89.1	53.5	98.4	-9.4	-9.4
3-Methylpentane	48.8	90.8	57.8	97.0	-16	-6.4
n-Hexane	48.4	89.4	51.3	94.3	-5.6	-5.2
C-2-Hexane	45.8	84.3	49.0	90.0	-6.5	-6.3
2,4-Dimethylpentane	58.2	108	63.8	117	-8.8	-7.7
Cyclohexane	50.4	92.9	55.2	102	-8.7	-8.9
2-3-Dimethylpentane	61.2	113	70.5	130	-13	-13
2,2,4-trimethylpentane	71.0	131	76.9	141	-7.7	-7.1
methylcyclohexane	61.2	112	66.3	121	-7.7	-7.4
2,3,4 Trimethylpentane	65.5	121	71.9	132	-8.9	-8.3
2-Methylheptane	69.9	128	75.4	139	-7.3	-7.9
Ethylbenzene	67.0	125	74.3	137	-9.8	-8.8
p-Xylene	68.0	128	74.5	137	-8.7	-6.6
o-Xylene	66.0	124	72.3	133	-8.7	-6.8
Isopropylbenzene	73.6	139	82.4	152	-11	-8.6
1,3,5-Trimethylbenzene	72.1	138	84.2	155	-14	-11

NOTE: The following compounds were reported in the audit gas mixture but have not been verified by ManTech: m-ethyltoluene and 1,2,3-trimethylbenzene.

APPENDIX J

SPECIATED NMOC ANALYSIS METHOD

06 MAR 199

RESEARCH PROTOCOL METHOD FOR ANALYSIS OF C_2-C_{12} HYDROCARBONS IN AMBIENT AIR BY GAS CHROMATOGRAPHY WITH CRYOGENIC CONCENTRATION

Prepared by

Robert L. Seila
U.S. Environmental Protection Agency
Research Triangle Park, North Carolina 27711

and

Donald A. Cox
Quality Assurance Data Services, Inc.
Boone, North Carolina 26807

Prepared for

U.S. Environmental Protection Agency
Atmospheric Chemistry and Physics Division
Atmospheric Sciences Research Laboratory
Research Triangle Park, North Carolina 27711

SEPTEMBER 1988

RESEARCH PROTOCOL METHOD FOR ANALYSIS OF C_2-C_{12} HYDROCARBONS IN AMBIENT AIR BY GAS CHROMATOGRAPHY WITH CRYOGENIC CONCENTRATION

Approvals

Robert L. Seila — 11/5/88
Robert L. Seila
Author - User
Date

William A. Lonneman — 11/15/88
William A. Lonneman
Author - User
Date

Ronald K. Patterson — 11/16/88
Ronald K. Patterson
ASRL QA Officer
Date

DISCLAIMER

The Research Protocol/Method (RPM) described herein should not be interpreted as a generally accepted standard or equivalent method or procedure. This RPM was developed for use within the Atmospheric Sciences Research Laboratory of EPA and may not be applicable to the needs of other organizations.

1.0 SCOPE AND APPLICATION

This recommended method is intended for analysis of C_2-C_{12} hydrocarbons (HC) in ambient air. The method's minimum quantification limit (MQL) is 0.12 ppb carbon; the method's minimum detection limit (MDL) is 0.04 ppb carbon. The MQL and MDL were determined by the method described by Knoll (reference 1).

2.0 SUMMARY OF METHOD

A known volume of gaseous sample is passed through a cryogenicaly cooled trap, cooled with liquid oxygen or liquid argon, cryogenicaly cooling traps out C_2 and heavier hydrocarbons without trapping methane. The trap containing the condensed HC's is warmed with hot water and its contents injected into a gas chromatograph (GC) capillary column where separation of the C_2-C_{12} hydrocarbons takes place. Detection of the hydrocarbon is by flame-ionization detector (FID), and the resultant peaks are quantified and recorded by an electronic integrator.

3.0 DEFINITIONS

3.1 Accuracy - The degree of agreement of the measurements with the true value of the propane Standard Reference Material (SRM) measured.

3.2 Precision - The repeatability of propane measurements from the same canister under essentially the same conditions.

4.0 INTERFERENCES

Any hydrocarbon compound that elutes with the same retention times as any of the C_2-C_{12} hydrocarbons and responds to flame ionization detection will interfere in this method.

5.0 PERSONNEL REQUIREMENTS

The researcher using this procedure is expected to be familiar with gas chromatographic practices and able to operated the instrument following the manufacturer's manual. Operator requirements will include daily startup procedures, instrument sensitivity adjustment, maintenance schedules, and other manufacturer's recommendations.

6.0 FACILITIES REQUIREMENTS

No special laboratory facilities are required.

7.0 SAFETY REQUIREMENTS

The calibration standards, collected sample, and most laboratory reagents used in this method pose no hazard to the researcher if normal laboratory safety practices are followed. Eye and hand protection are required when using liquid nitrogen and argon or other cryogens. Combustion is possible when using liquid oxygen, and its contact with all flammable materials must be avoided. In addition, electrical connections can also pose a hazard.

The American Chemical Society (ACS) guideline regarding the safe handling of chemicals used in this method is required.

7.1 EPA Safety Regulations

Information on EPA Safety Regulations are included in text.

7.2 Vacuum Systems

See page G9 of the EPA/RTP Safety Manual (ref. 2) for precautions.

7.3 Heated Surfaces

The GC injection ports, column, column oven, and detectors are maintained at temperatures high enough to cause burns. The researcher should exercise caution to avoid contact with these surfaces.

7.4 Immersion Heater

WARNING - The immersion heater must always be immersed in water, otherwise very high temperatures to be reached with the possible ignition of combustible materials and reduction of the operating life.

7.5 Compressed Gases

See pages F14 through F18 of the EPA/RTP Safety Manual (ref. 2) for safety precautions. The following are specific safety requirements for this method.

7.5.1 Hydrogen

Hydrogen gas cylinders used for FID fuel are not permitted in the RTP Tech Center. Hydrogen cylinders and their regulator must be secured outside the building, and a stainless steel pressure line run into the laboratory.

7.5.2 Cryogenic Liquids

See pages F18 through F20 of the EPA/RTP Safety Manual (reference 2) for precautions.

7.5.2.1 Liquid Oxygen (if used)

WARNING - Strong oxidant. Vigorously promotes combustion. Avoid contact with all flammable materials. Containers, lines, valves, and vents must be free of oil and grease. May cause severe frostbite. Wear eye and hand protection.

7.5.2.2 Liquid Nitrogen and Liquid Argon (if used)

WARNING - Cryogenic fluids. May cause severe frostbite. Wear eye and hand protection. Use with adequate ventilation. Keep contact with air to a minimum to avoid buildup of liquid oxygen (see above).

8.0 APPARATUS AND EQUIPMENT

This section describes the instrument requirements for this method.

8.1 Gas Chromatograph

The gas chromatograph is equipped with a temperature programmed oven that holds the separation column, flame-ionization detector (FID), and electronic integrator. This method uses an HP 5880A Gas Chromatograph with the following specifications:

8.1.1 Gas Chromatograph Column

Type: fused silica capillary column.

Diameter: 0.32 mm ID.

Length: 60 m.

Liquid Phase: DB-1 bonded liquid phase (J&W Scientific Inc., Folsom, Calif.)

Liquid Phase Thickness: 1.0

8.1.2 Inlet System

The inlet system is illustrated in Figure 1. The automatic six-port gas sampling valves (V4 and V5, Figure 1) are located on an aluminum block which is temperature regulated. All other valves are at ambient temperature.

8.1.2.1 Connection of Inlet System to Column

A 5" length of 1/4in. x 0.75 mm OD glass tube (Supelco,Inc.) is used to connect the gas sampling valve to the column. At the value end of the glass tube, there is a 1/4-in to 1/16-in Swagelok™ SS reducing union; at the column end is a 1/4-in to 1/16-in specially modified reducing union (Supelco, Inc.). Graphite/Vespel ferrules are used.

8.1.3 Trap

The sampling trap is constructed of clean, chromatographic grade, 3.2 mm (1/8 in) OD stainless steel tubing, 16 cm in length, which is bent into a U-shape approximately 7 cm from each end so that the U is approximately 2.2 cm in width. Clean, untreated 60/80 mesh glass beads are poured in the U tube to a height of approximately 3 cm. Silanized glass wool is used as a plug to the last cm of both ends. 1/16"-1/8" unions are added to each end for connection to the gas sampling valve.

8.2 Mass Flow Meter

A thermal conductivity mass flow meter (M1, Figure 2) (TYLAN Corp., model FM 360, 0 to 500 standard cm3/min or equivalent) is used to measure the flow rate through the cryogenic trap. See the following ASRL-ACPD-RPM-??? for mass flow meter operation instructions.

8.3 Pressure Gauge

A precision Bourdon gauge (P1, Figure 1), with a range of 0 to 200 Torr (absolute), is used. A gauge with a range of 0 to 400 Torr is also acceptable.

8.4 Vacuum Pump

An oil-less diaphragm pump (such as Thomas model 2106CA13-515-2) is used to evacuate the inlet system.

CAUTION: Due to the possibility of contamination, oil-sealed vacuum pumps should not be used.

8.5 Tubing and Connectors

All tubing is chromatographic grade stainless steel. All connections are stainless steel compression tube fittings (Swagelok™ or equivalent).

8.6 Regulators for compressed gases

Carrier gas, hydrogen, and air delivery pressures are controlled by two-stage regulators mounted at the tank.

NOTE: The H_2 regulator is outside of the building at RTP. Other gases have regulators on the inside line.

CAUTION: Due to the possibility of contamination by organic materials, only regulators with stainless-steel diaphragms should be used.

8.7 Immersion Heater

An immersion heater is used to heat a water bath that heats the trap, volatilizing the cryogenically trapped gases.

9. REAGENTS/MATERIALS

All gases used to operate the GC system are high quality grade and may vary in specifications with manufacture. Instrument calibration gases are obtained from the National Bureau of Standards (NBS) and are referred to as Standard Reference Materials (SRM). Use of reagent grade chemicals for all dilutions and standards materials is recommended.

9.1 Gases and Cryogens

The following is recommend for use with this method.

9.1.1 Helium Carrier Gas

High purity, minimum purity of 99.995 percent helium carrier gas is best, Bureau of Mines.

9.1.2 Detector Air

Linde zero grade with total hydrocarbons <1 ppm, or equivalent.

9.1.3 Detector Hydrogen

Prepurified grade 99.99 percent pure or equivalent.

9.1.4 Detector Makeup Nitrogen

Prepurified grade 99.99 percent pure (or equivalent).

9.1.5 Liquid Nitrogen (for GC oven cooling)

Commercial grade acceptable.

9.1.6 Liquid Oxygen (for trap cooling)

Commercial grade acceptable.

9.1.7 Liquid Argon (for trap cooling)

Liquid argon may be used instead of liquid oxygen for trap cooling. Although liquid argon is more expensive, it is inert, and its use eliminates the oxidant hazard associated with liquid oxygen. Commercial grade is acceptable.

9.1.8 Propane in Air (for calibration)

NBS SRM 1665, 3 ppm (nominal) propane in air.

9.1.9 Instrument Air Vacuum

The six-port gas sampling valves require clean filtered air at 350 kPa (35 psig) and a vacuum of approximately 20 in Hg for operation.

10.0 SAMPLE/SAMPLING PROCEDURE

This RPM is generally limited to the laboratory analysis but could also be used for field analysis. Field sampling and canister preparation procedures are covered separately (See reference 3.). Canister containing the sample are connected into the system as shown in Figure 1.

11.0 CALIBRATION AND STANDARDIZATION

11.1 Mass Flow Meter Calibration

For calibration see ASRL-ACPD-RPM XXX

11.2 Pressure Gauge Calibration

For calibration see ASRL-ACPD-RPM XXX

11.3 Gas Chromatograph Calibration

To perform a calibration in the parts per billion carbon (ppbC) range, the following procedure is utilized:

11.3.1 Instrument Optimization

A propane in air sample should be first analyzed and adjustments made to the carrier gas linear velocity such that the propane peak elutes at 3.105 min (3 min 6 sec) following injection. Using the capillary column and temperatures specified in this document, these C_2-C_{12} HC compounds should elute in the order of the retention times

given in Table 1. (This assumes that the carrier gas flow rate is pressure controlled). The actual eluting times should be determined by preparing and analyzing known samples of each compound and depends upon column length, carrier flow rate, column temperature, etc.

The flame-ionization detector and air flow rates are adjusted according to the manufacturer specifications for proper operation and optimum signal to noise ratio. These flow rates for the HP5890 are [illegible] cm^3/min for hydrogen and 400 cc/min for air.

11.3.2 Calibration Using Propane

[illegible] response of the [illegible] is assumed to be linear with respect to the number of carbon atoms present in the detected compound (reference 3). Thus, it is convenient to measure compound peak concentration (conc.) in terms of parts-per-billion-carbon (ppbC) where

Conc.,ppbC = (number of carbon atoms in compound)(Conc.,ppb)

For a fixed sample volume, the concentration is proportional to the area under the chromatographic peak. The area under the chromatographic peak is converted to ppbc concentrations by the integrator by the following calculation:

$$\text{Conc., ppbC} = (k)(\text{Area})$$

Area is given in integrator counts and k is an experimentally determined calibration constant (ppbC/count). The same value of k is used for all compounds. The calibration constant k is determined by analysis of an NBS SRM propane in air standard. The value of k is then given by:

$$k\ (\text{ppbC/count}) = \frac{3(\text{Conc.NBS Standard Propane,ppm})(1000\ \text{ppbC/ppmC})}{\text{Median Area Count}}$$

Three to five concentration levels of the standard are needed to generate a suitable calibration curve. Two to three repeated sample injections per calibration level are made. Averaged values of K are calculated and recorded in the laboratory notebook, and the mean or median value taken. Example are given in Exhibit 1. below.

EXHIBIT 1. LABORATORY NOTEBOOK RECORD

Calibration of the HP-5880A GC equipped with J&W DB-1 fused silica column

Propane SRM: 2.83 ± 0.03 umole/mole(ppm)
8490 ppb as carbon

Cylinder Number : FF18831, Sample Number 85-51-E

Sample	Volume cm^3		Equivalent Propane Conc. (ppbC)	Area of Propane Peak	Response Factor Conc/Area
1a	420	2330	8490	28014.4	0.303058
1b	420		8490		
1c	420		8490		
2a	316	2122	6367.5	21191.7	0.300471
2b	316		6367.5		
2c	316		6367.5		
3a	210	1415	4245	14013.5	0.302922
3b	210		4245		
3c	210		4245		
4a	105		2122.5	6861.1	0.309353
4b	105	702.5	2122.5	15	
4c	105		2122.5		

For this example: n=4 r2= 1.00 y=-0.139 + 3.328X. The mean (X) is 0.30395 and 0.30299 is the median and conc. (ppbc) = 0.30048 x (area) + 0.042

Where Y = conc. (ppbc), M = 0.30048, X = area, B = 0.042 and Y = M x + B

11.3.3 Calibration Quality Control

It is assume that the NBS propane standard is reliable and valid for 2 years from date of purchase. Three to five different concentrations of the NBS standard and one zero standard are injected and the response factors are obtained, as discussed above. The percent difference of the response factor from the mean shall be no more than 5%. The percent difference is calculated by:

% Diff. = ((Response - Mean)/Mean) x 100

For example:

Response Factor	Mean	Difference	% Difference
0.303058	0.30395	0.000892	0.29
0.300471	0.30395	0.003479	1.14
0.302922	0.30395	0.001028	0.34
0.309353	0.30395	0.005403	1.78

Problems leading to a failure of the system to meet the above requirement for the response factors must be corrected before proceeding with the analysis. Minor variations from the proper value are probably due to operator error. However, large variations are probably attributable to equipment problems.

It is assumed that the response of the FID is linear with respect to the number of carbon atoms present (i.e., r^2 should be $\geq$ .95). This assumption has been previously verified (ref. 3) for several hydrocarbon compounds. The intercept should be not significantly different from zero at a =0.05. A positive intercept implies propane contamination.

Procedures for least-squares method of fitting a linear or nonlinear function to the calibration data set are found in appendix J of reference 4. The calculation for linear function is:

$$b = \frac{n(\sum xy) - (\sum x)(\sum xy)}{n(\sum x^2) - (\sum x)^2} = \text{slope of fitted line}$$

$$a = \frac{\sum y - b(\sum x)}{n-1} = \text{intercept of line}$$

Where n = number of points, x = area of propane peak, and y = equivalent propane conc:

11.3.3.1 Establishment of Standard Error of Estimate

After the calibration curve statistics has been calculated, the standard error of estimate or (Se) can be calculated using:

$$Se = \sqrt{(((\sum y^2 - a(\sum y) - b(\sum xy))/n-2)}$$

Whereas, a = y-intercept, b =slope and n= number of points in the calibration curve

A calibration will show variation in both slope and intercept over time and the SE will become larger. The Se has properties analogous to those of the standard deviation and can be used as an indicator of curve degradation. For data analysis, the SE will be used to compute the upper and lower limits for a single data observation (xobs) based on the calibration curve data using:

$$(a + (b\ xobs)) \pm ta/2 \times Se \times \sqrt{1 \pm \frac{1}{n} + \frac{n(xobs - \bar{x})2}{n(\sum x^2) - (\sum x)^2}}$$

Whereas ta/2 is obtained from the t distribution table at 95 % and the number of degrees of freedom is n-2.

11.3.3.2 Establishment of Initial Warning and Control limits

After the initial calibration curve has been constructed according to 11.3.2, reanalyze additional samples of the low and high concentration standards. Calculate the concentrations using the previously derived calibration curve. Repeat this procedure until at least ten determinations at each concentration level have been made. These additional high and low concentrations should be collected on ten different days to provide a realistic estimate of the method daily variability. Calculate standard deviation(s) at each concentration level (i.e., highest and lowest standard). Use the mean concentration as the mean value ($\bar{X}$) for determining the control limits. A warning limit of $\bar{X} \pm 2s$ (95 %) and a control limit of $\bar{X} \pm 3s$ (99 %) should be used.

11.4 STANDARDIZATION

Information to be supplied at a later date.

12.0 ANALYSIS PROCEDURES

The analysis procedure is divided into two stages: Sample preparation and gas chromatographic analysis.

12.1 Preparation Stage

The sample preparation steps are:

A. Adjust instrument gas flow rates.

1) Turn off the FID and FID heater - allow to cool to room temperature.

2) Attach a soap film flow meter to the detector chimney (see instrument instruction manual for an illustration this apparatus.

3) Set the carrier gas (Helium) pressure to 200 kPa (29 psia).

4) Set the hydrogen pressure to 250 kPa (35 psia).

<u>WARNING</u> - Hydrogen delivery pressure should be less than detector air pressure.

Adjust the hydrogen flow to 28-30 cm^3/min.

5) Set the detector air pressure to 300 kPa (45 psia). Adjust the detector flow to 430 cm^3/min ± 10 cm^3/min.

6) Set the makeup nitrogen pressure to 300 kPa (45 psia). Adjust the nitrogen makeup and carrier gas flow rate to a total flow of 30 cm^3/min.

NOTE: The above flow rates were optimized for the given column on an HP 5880A gas chromatograph with FID. If another gas chromatograph is used, adjust the flow rates to obtain maximum sensitivity according to the manufacturers instructions for that instrument.

B. Adjustment of Carrier Gas Flow Rate

Verify that the carrier gas (Helium) pressure is at 29 kPa. Refer to Section 1.11.1 for fine tuning of the carrier gas flow rate. Flow rate is dependent upon the column head pressure.

C. Set Up Detector

With the flow rates adjusted as in Step A, remove the adapter from the FID chimney and reset the detector temperature to 250°C. Light the detector with the ignitor and check that combustion is taking place.

D. Column and Value Temperatures

Detector = 250°C.

Initial Oven Temperature = -50°C.

Oven Temperature Programming Rate = 8°C/min (temperature programming started 2 minutes after time of injection).

Final Oven Temperature = 200°C.

Six-Port Valve Temperature = 60°C.

12.2 Analysis Stage

Preconcentration and injection of the sample is carried out as follows. Initial conditions are these: V2 is closed, vacuum pump is on, valves V3 and V6 are closed, gas sampling valves V4 and V5 are in the off position (Figure 1). Attach the canister to be analyzed to the inlet line. Open valves V3 and V6 to evacuate the system. When the vacuum gauge (P1) reaches 50 Torr or below, close valve V6. The system should remain at or very near 50 Torr. A rising pressure indicates a leak in the system.

The sample concentrating trap is immersed in a Dewar flask containing liquid oxygen (or liquid argon) sufficient to cover most of the "U" but placed so that the compression fittings are neither inside the flask nor touching the liquid cryogen. If the fittings are inside the flask, sample will condense in the fittings instead of on the trap. This could result in either plugged carrier gas flow due to ice forming in the fitting and/or improper sample plug injection of the trapped hydrocarbons.

Open valve V2 and adjust valve V1 to a flow of 100 cm3/min, using mass flow-meter M1. When the pressure gauge (P1, Figure 2) is at 60 Torr, actuate valve V4 (V4 is switched to one direction, see Figure 2). Adjust flow rate back to 100 cm^3/min, using valve V1, if necessary.

When P1 reads 140 Torr, inject sample onto column by actuating valve V5 (Figure 3), removing liquid oxygen flask from trap, immersing the U-trap in the hot water bath, and pressing start button on electronic integrator (and GC, if needed); deactivate valve V4 (Figure 3).

CAUTION: It is extremely important that V5 be closed before removing the liquid oxygen flask from the trap. Failure to observe this sequence will permit light hydrocarbons to be vented before injection.

At a time of 2 minutes into the run, deactivate valve V5. Stop the run manually or automatically after approximately 35 minutes or when the last compound of interest elutes. Identify sample peaks by their retention times, as determined in Section 11.3.2. An example chromatogram is shown as Figure 4.

At least one QC sample (Section 18.0) is run routinely. Upon completion of the sample run, calculate and review the QC results to determine if there are any significant differences. Any value falling outside the control limits is indicative of a system problem and requires corrective action (Section 15.0) before continuing analysis of samples.

13.0 CALCULATIONS

Using the calibration constant (k) determined in section 11.3.2, calculate the concentration of each compound (peak) as follows:

$$\text{Concentration, ppbC} = (k)(\text{Area})$$

where the area is in integrator counts. Most integrators may be programmed to perform this calculation and present results directly in units of concentration.

13.1 Ambient Data

To calculate the upper and lower limits of the concentration (i.e., Limits of prediction), the appropriate formula to calculate the limits of prediction are given in section 11.3.3.1

14.0 Data Reporting

The concentration of each C_2-C_{12} hydrocarbon should be reported. The integrator chart of sample and calibration standard should be saved as a record of analysis. Data tape from the integrator computer system should be identified, logged in the laboratory notebook, and stored. Sample run report should be recorded in the laboratory notebook in the following format:

Day Month
Notes: (e.g., QC, Standard, Duplicate, Replicate, etc.)

ID	SITE	DATE	CAN#	PEAKS	DB-1	TAPE	(COMPARISONS)

Other forms of computer data storage should be noted when they occur. It is recommended that all C_2-C_{12} hydrocarbon peak data be stored in a computer compatible format for ease of reporting and analysis.

15.0 Corrective Action

Corrective action should be taken whenever any of the following are observed:

- Internal QC checks exceeding limits.
- Variation of response, as shown by more than a ± 15 percent change in calibration constant.
- Variation of ±0.2% of retention times for specific peaks.
- Poor or ill-shaped peaks (wide or shallow).
- Fused or combined peaks.
- Presence of other peaks which elute with the compounds of interest (C_2-C_{12} hydrocarbons).
- Integrator failure to correctly recognize start time, stop time, or to correctly determine baseline and peak areas.

Determination of the proper corrective action requires a knowledge of chromatographic principles and instrumentation beyond the scope of this document.

16.0 METHOD PRECISION

Based on repeated analysis of NBS SRM propane in air Standards over a one year period, the variation of the calibration Constant (k) was found to be within ± 15 percent of the initial value. Replicate analysis of ambient air samples for total nonmethane organic compounds (NMOC) using a similar technique (reference 2) showed an analytical precision of approximately ± 12 percent. The precision for C_2-C_{12} hydrocarbons should be similar. Method precision will be determine from replicate analysis of the RTI canister or duplicate measurements made at concentration levels representative of the range experienced by routine samples. Operator and daily instrument precision will be determined from duplicate analyses of ambient canisters.

17.0 METHOD ACCURACY

Due to the lack of suitable NBS standards for the range of hydrocarbons, the accuracy for analysis of all hydrocarbons (C_2-C_{12}) cannot be directly determined using the propane standard. For this method, the propane SRM will be used to determine the accuracy. External audits are an essential part of the method QA program and performance audits may be used to determine instrument accuracy.

18.0 DAILY QUALITY CONTROL

This section specifies the daily QC program and discusses responsibilities for evaluation of the QC data. Calibration QC is discussed in section 11.3. These procedures require real-time review of analytical performance by the analyst, and QC review of all data directly after input to the data base.

18.1 QC Checks and Frequency

One sample of NBS SRM propane in air should be analyzed at the beginning of each day that sample is run. One or more QC canisters will be run along with sample analysis. Duplicates of the QC canisters will be run to detect procedural or operator bias as part of the real-time within-day QC review. Replicates will be run to determine variability in the instrument performance (day to day) and to determine the instrument precision.

18.1.1 Duplicates

Positive or negative differences of duplicate measurements are indicative of gross method error or procedural in-run operator bias. The data obtained from duplicate measurements will be used to determine when the GC is out of statistical control. The percent difference of the results should be no more than 10%.

The standard deviations used to generate the initial QC control limits (section 11.3.5) can be used to evaluate to the duplicate differences initially. Duplicate measurements should agree within $2\sqrt{2}\,s$ (or 2.83 times the s). After a reasonable period of time (i.e., ten or more duplicate measurements), the following procedure for calculating new duplicate control limits should be performed.

For duplicate measurements x and y, where x and y are the observation in the order obtained, the difference $d = x - y$ is calculated and recorded. To determine duplicate control limits after ten to fifteen sets of duplicates, the formula for s is:

$$s = \sum d^2/2k$$

where k is the number of subgroups or pairs of duplicate analyses. The average range (R) for duplicates is:

$$\bar{R} = \sum \left| d \right| /k$$

Control limits can be reestablished based on the number of duplicates performed over a period of time. Control charts for differences and ranges can be constructed by $\pm 3\sqrt{2}s$ with the central line being 0; the limit for the range can be obtained from D4R (Ref. 4, Section H for D4 value).

18.1.2 Replicate Measurements

Positive or negative differences of analysis replicate measurements with respect to the initial value measured are indicative of a method error or operator day to day bias. The data obtained from these measurements will be use to determine when the measurement system is out of statistical control and to determine analytical precision.

Historical replicate data must first be combined as necessary to develop an assessment of precision that defines the expected standard deviation of replicates. The standard deviations used to generate the QC control limits (section 11.3.5) can be used initially. Recent and historical patterns are essential to evaluating the control status using replicate measurements. The number of replicate measurements needed for an experiment will be determined on the historical or recent variability of the system.

Given a series of repeated measurements (R1,R2,---Rn), the formula for s is:

$$s = \sum (D)^2/2k$$

where k is the number of replicate pairs and D is difference between the pair values. It is important that all replicates are determined under identical conditions and that the distribution of repeated results is approximately "normal" to establish the control limits. It is recommended that the standard deviation and range charts be used and the Control limits are set at 3s and 2s . A ratio greater than 1.3 between-run (replicates) and within-run (duplicates) should be considered "statistically significant" and corrective action taken. Reestablish new control limits whenever instrumental operation conditions are varied, calibrations performed, or QC constrictions are changed.

18.1.3 Control Chart for QC Canisters/Samples

The measured value of the QC sample is plotted on the control charts for the QC sample concentration differences or as an percent difference. The measured value (ppbC) should not differ by more than two times the standard deviation of NBS-certified value (ppb). If this occurs, the system should be checked for proper operation. If the condition persists, or if two successive QC measurements are outside of the $\pm$ 2s limits, or if the measured value exceeds the upper or lower control limit (three standard deviations, section 11.3.5), the detector should be cleaned and checked for correct operation. If the response remains outside the upper or lower control limit, then the instrument should be recalibrated and/or corrective action taken. Plot the data obtained from the QC measurements on a control chart for routine assessment of analytical bias and precision.

18.1.4 Control Chart for Daily NBS SRM

The measured value of the daily NBS SRM propane sample is plotted on a control chart. The measured value (ppbC) should not differ by more than two times the standard deviation of NBS-certified value (ppb) If this occurs, the system should be checked for proper operation. If the condition persists or the measured value exceeds the upper or lower control limit (three standard deviations, section 11.3.5), corrective action should be performed before any further sample analysis. This includes checking the sample preconcentration procedure and the GC analysis system for proper operation. If the response remains outside the upper or lower control limit), then the instrument should be recalibrated.

18.2 Performance Evaluations

P ticip ion i perfo mance evaluation studies is recomm. ded f. this method. The samples used for these performance audits should contain the species of interest at concentrations within the normal working range of this method. The true values should remain unknown to the analyst until the end of the study to prevent operator bias.

18.3 Systems Audits

This section contains the recommended procedure for performing an system audit for this method. The need for and scheduling of systems audits will be determine by the Project Officer. The basic scope of the system audit will be:

1. to verify the adherence to this research protocol/method; and

2. to verify the data flow and archiving process used for the computerized data base.

Orga. zations performing systems audits should review the following sections and the audit questionnaire (Appendix A). It is recommended that the independent audit plan be compared to this document and differences noted. In all cases, methods for assessing the data quality for this method must be approved by the organization being audited prior to starting the audit.

18.3.1 Audit Plan

1. Meet with organizational personnel, identify key personnel, identify the purpose of the audit, and review audit plan and questionnaire.

2. Collect all QC Documentation (i.e., QC Charts, forms, notebooks, etc.) and data base print outs.

3. Perform audit of sample analysis.

4. Perform audit of sample data processing activities.

5. Perform audit of data validation.

6. Perform audit of data base.

7. Complete audit questionnaire.

8. Hold audit review meeting and critique audit findings. Make corrections to audit findings or questionnaire if required. Discuss corrective action plans, if appropriate.

It is suggested that data quality might be assigned one of three levels according to the following guidelines:

1. Unknown quality - a vital piece of QC data is missing or can not be verified.

2. Questionable quality - generally all data and documents are in good order, but a secondary item needed to completely characterize the data is missing, e.g., a control chart to demonstrate that the method was in control over a given time interval.

3. Known quality - all documentation is in order, with data traceable from the final report to the date and time of the analysis.

18.3.2 Documents

The following documents will be reviewed at the time of the audit:

1. Laboratory notebooks or forms for method.

2. QC charts for duplicates or replicates

3. At least five previous calibration curves.

4. Instruction manuals and related SOP's or RPM's

5. Documents relating to quality of materials used.

6. All documentation for GC computer, data validation, and data storage

7. All documents related to compliance with ASRL QA plan requirements.

19.0 DATA VALIDATION

Data will be critically reviewed to identify and isolate errors. Data validation occurs at each step of the measurement process, beginning with the GC electronic integrator. Once data enters a computerized storage and retrieval system, a more detailed screening process is required.

20.0 QUALITY ASSURANCE REPORTS TO MANAGEMENT

Laboratory QC data and audit results are reported quarterly. A report will be submitted to management anytime for one or more of the following:

1. When a significant discrepancy is noted and an examination of the analytical procedure reveals not apparent reason for the discrepancy;

2. When the analysis comparing the commercial and NBS standards indicates serious deterioration of the commercial standard; and

3. When audit results or out-of-control situations are noted that indicate that the method is producing data of unknown quality.

21.0 PREVENTIVE MAINTENANCE

To be defined at later date.....

REFERENCES

1. Knoll, J. E., Journal of Chromatographic analyses, Vol. 23, p. 422, September 1987.

2. EPA/RTP Safety Manual, Support Services Office, Environmental Research Center, Research Triangle Park, NC 27711.

3. Dietz, W. A., Journal of Gas Chromatography, Vol. 5, pp. 68-71 (1967).

4. Quality Assurance Handbook for Air Pollution Measurements, Volume 1. Principles (EPA-600/9-76- 005 Dec 1984).

GLOSSARY

BIAS
- An error in a method that systematically distorts results.

REST TO BE DEFINED LATER

APPENDIX A

TABLE OF
HYDROCARBON IDENTIFICATIONS AND RETENTION TIMES

Clarias - Alkeas

TABLE 1. HYDROCARBON IDENTIFICATIONS AND RETENTION TIMES

HP5880 Calibration Table

CAL. NO.	Ret. Time	REF	Compound Name	CAL NO.	Ret. Time	REF	Compound Name
0	0.000	0	Uncalibrated	101	2.018	0	ETHANE
102	1.830	0	ETHYLENE	103	1.960	0	ACETYLENE
104	2.988	0	PROPENE	105	3.105	0	PROPANE
106	3.373	0	Unknown	107	3.540	0	PARAFFIN
108	4.017	0	OLEFIN	109	4.450	0	OLEFIN
110	5.105	1	ISOBUTANE	111	5.423	0	Unknown
112	5.661	0	Unknown	113	6.115	0	2-METHYLPROPYLENE
114	6.286	0	BUTENE-1	115	6.462	1	n-BUTANE
116	6.937	0	t-2-BUTENE	117	7.500	0	c-2-BUTENE
118	8.739	0	C4 OLEFIN	119	9.398	1	ISOPENTANE
120	9.652	0	C5 OLEFIN	121	10.000	0	1-PENTENE
122	10.086	0	C5 OLEFIN	123	10.272	0	2-METHYL-1-BUTENE
124	10.410	1	n-PENTANE	125	10.560	0	ISOPRENE
126	10.737	0	t-2-PENTENE	127	11.008	0	C5 OLEFIN
128	11.116	0	C5 OLEFIN	129	11.172	0	c-2-PENTENE
130	11.256	0	C5 OLEFIN	131	11.505	0	C6 PARAFFIN
132	11.551	0	C6 PARAFFIN	133	11.672	0	2,2-DIMETHYLBUTANE
134	11.994	0	C6 OLEFIN	135	12.252	0	C6 OLEFIN
136	12.486	0	C6 PARAFFIN	137	12.490	0	C6 OLEFIN
138	12.631	0	CYCLOPENTANE	139	12.763	0	2,3-DIMETHYLBUTANE
140	12.848	0	C6 OLEFIN	141	12.957	1	2-METHYLPENTANE
142	13.031	0	C6 OLEFIN	143	13.097	0	C6 OLEFIN
144	13.369	0	C6 OLEFIN	145	13.440	0	3-METHYLPENTANE
146	13.643	0	C6 OLEFIN	147	13.850	0	C6 OLEFIN
148	14.062	0	1 n-HEXANE	149	14.164	0	C7 PARAFFIN
150	14.240	0	C7 OLEFIN	151	14.317	0	C7 OLEFIN
152	14.406	0	C7 OLEFIN	153	14.543	0	C7 OLEFIN
154	14.605	0	C7 OLEFINN	155	14.750	0	C7 OLEFIN
156	14.898	0	METHYLCYCLOPENTANE	157	15.085	0	2,4-DIMETHYLPENTANE
158	15.177	0	C7 PARAFFIN	159	15.281	0	C7 OLEFIN
160	15.523	0	C7 OLEFIN	161	15.657	0	C7 PARAFFIN
162	15.681	1	BENZENE	163	15.878	0	3,3-DIMETHYLPENTANE
164	15.980	0	CYCLOHEXANE	165	16.056	0	C7 OLEFIN
166	16.320	0	2-METHYLHEXANE	167	16.358	0	2,3-DIMETHYLPENTANE
168	16.437	0	C7 PARAFFIN	169	16.507	0	C7 OLEFIN
170	16.592	0	3-METHYLHEXANE	171	16.785	0	C7 PARAFFIN
172	16.916	0	C7 PARAFFIN	173	17.007	0	2,2,4-TRIMETHYLPENTANE
174	17.316	0	C8 OLEFIN	175	17.358	0	n-HEPTANE
176	17.507	0	C8 PARAFFIN	177	17.667	0	C8 OLEFIN
178	17.762	0	C8 OLEFIN	179	17.984	0	METHYLCYCLOHEXANE
180	18.343	0	C8 PARAFFIN	181	18.407	0	C8 PARAFFIN
182	18.602	0	C8 PARAFFIN	183	18.816	0	C8 PARAFFIN
184	18.897	0	2,3,4-TRIMETHYLPENTANE	185	19.022	1	TOLUENE
186	19.170	0	C8 PARAFFIN	187	19.202	0	C8 PARAFFIN
188	19.257	0	C8 PARAFFIN	189	19.361	0	C8 PARAFFIN
190	19.408	0	C8 PARAFFIN	191	19.585	0	C8 PARAFFIN
192	19.701	0	C8 PARAFFIN	193	19.905	0	C8 PARAFFIN
194	20.001	0	C8 PARAFFIN	195	20.109	0	C8 PARAFFIN
196	20.180	0	C8 PARAFFIN	197	20.250	0	C8 PARAFFIN
198	20.330	0	n-OCTANE	199	20.377	0	C9 PARAFFIN
200	20.470	0	C9 PARAFFIN	201	20.662	0	C9 PARAFFIN

TABLE 1. HYDROCARBON IDENTIFICATIONS AND RETENTION TIMES (Continued)

HP5880 Calibration Table

CAL. NO.	Ret. Time	REF	Compound Name	CAL NO.	Ret. Time	REF	Compound Name
202	20.827	0	C9 P#RAFFIN	203	20.949	0	C9 OLEFIN
204	21.009	0	C9 PARAFFIN	205	21.123	0	C9 PARAFFIN
206	21.172	0	C9 PARAFFIN	207	21.223	0	C9 PARAFFIN
208	21.277	0	C9 PARAFFIN	209	21.369	0	C9 PARAFFIN
210	21.425	0	C9 PARAFFIN	211	21.524	0	C9 PARAFFIN
212	21.596	0	C9 PARAFFIN	213	21.744	0	ETHYLBENZENE
214	21.842	0	C9 PARAFFIN	215	21.973	1	m&p-XYLENE
216	22.140	0	C9 PARAFFIN	217	22.235	0	C9 PARAFFIN
218	22.322	0	C9 PARAFFIN	219	22.415	0	C9 PARAFFIN
220	22.462	0	C9 OLEFIN	221	22.518	0	C9 PARAFFIN
222	22.601	0	o-XYLENE	223	22.688	0	C9 PARAFFIN
224	22.733	0	C9 PARAFFIN	225	22.785	0	C9 PARAFFIN
226	22.860	0	C9 PARAFFIN	227	22.940	0	C9 PARAFFIN
228	23.034	0	n-NONANE	229	23.174	0	C10 PARAFFIN
230	23.243	0	C10 PARAFFIN	231	23.305	0	C10 PARAFFIN
232	23.455	0	C10 PARAFFIN	233	23.540	0	C10 PARAFFIN
234	23.635	0	C10 PARAFFIN	235	23.706	0	C10 PARAFFIN
236	23.824	0	C10 PARAFFIN	237	23.883	0	C10 PARAFFIN
238	23.940	0	C10 PARAFFIN	239	24.007	0	C10 OLEFIN
240	24.107	0	C10 OLEFIN	241	24.177	0	C10 PARAFFIN
242	24.212	0	n-PROPYLBENZENE	243	24.310	0	C10 PARAFFIN
244	24.386	0	p-ETHYLTOLUENE	245	24.447	0	m-ETHYLTOLUENE
246	24.578	0	C9 AROMATIC	247	24.632	0	C10 PARAFFIN
248	24.694	0	C10 PARAFFIN	249	24.852	0	o-ETHYLTOLUENE
250	24.979	0	C9 AROMATIC	251	25.051	0	C10 PARAFFIN
252	25.122	0	C10 OLEFIN	253	25.217	0	1,2,4-TRIMETHYLBENZENE
254	25.320	0	C9 AROMATIC	255	25.408	0	C10 PARAFFIN
256	25.520	0	n-DECANE	257	25.597	0	C9 AROMATIC
258	25.661	0	C9 AROMATIC	259	25.770	0	C9 AROMATIC
260	25.909	0	1,2,3-TRIMETHYLBENZENE	261	25.972	0	C11 PARAFFIN
262	26.043	0	C11 PARAFFIN	263	26.103	0	C11 PARAFFIN
264	26.218	0	C10 AROMATIC	265	26.379	0	C10. AROMATIC
266	26.497	0	C10 AROMATIC	267	26.567	0	C10 AROMATIC
268	26.710	0	C10 AROMATIC	269	26.807	0	C10 AROMATIC
270	26.842	0	C10 AROMATIC	271	26.877	0	C11 PARAFFIN
272	26.960	0	C10 AROMATIC	273	27.023	0	C11 PARAFFIN
274	27.142	0	C11 PARAFFIN	275	27.181	0	C10 AROMATIC
276	27.227	0	1,2-DIMETHYL-4-ETHYLBENZENE	277	27.363	0	C10 AROMATIC
278	27.421	0	C10 AROMATIC	279	27.601	0	C11 PARAFFIN
280	27.680	0	C10 AROMATIC	281	27.769	0	C10 AROMATIC
282	27.809	0	1,2-DIMETHYL-3-ETHYLBENZENE	283	27.953	0	C10 AROMATIC
284	28.040	0	1,2,4,5-TETRAMETHYLBENZENE				
285	28.116	0	1,2,3,5-TETRAMETHYLBENZENE				
286	28.193	0	C10 AROMATIC	287	28.244	0	C11 PARAFFIN
288	28.360	0	C10 AROMATIC	289	20.763	0	C9 PARAFFIN
290	28.623	0	C11 AROMATIC	291	28.662	0	C11 AROMATIC
292	28.730	0	C11 AROMATIC	293	28.845	0	C11 AROMATIC
294	28.923	0	C11 AROMATIC	295	29.056	0	C11 AROMATIC
296	29.120	0	C11 AROMATIC	297	29.199	0	C11 AROMATIC
298	29.270	0	C11 AROMATIC	299	29.350	0	C11 AROMATIC

TABLE 1. HYDROCARBON IDENTIFICATIONS AND RETENTION TIMES (Continued)

HP5880 Calibration Table

CAL. NO.	Ret. Time	REF	Compound Name	CAL NO.	Ret. Time	REF	Compound Name
300	29.570	1	C11 AROMATIC	301	29.695	0	C11 AROMATIC
302	29.840	0	C11 AROMATIC	303	29.888	0	C11 AROMATIC
304	29.939	0	C_{12} PARAFFIN	305	30.077	0	C11 AROMATIC
306	30.159	0	C11 AROMATIC	307	30.210	0	C11 AROMATIC
308	30.283	0	C11 AROMATIC	309	30.367	0	C11 AROMATIC
310	30.598	0	C11 AROMATIC	311	30.727	0	C11 AROMATIC
312	30.770	0	C12 PARAFFIN	313	30.821	0	C11 AROMATIC
314	30.908	0	C12 AROMATIC	315	31.070	0	C12 AROMATIC
316	31.162	0	C12 AROMATIC	317	31.253	0	C12 AROMATIC
318	31.305	0	C12 AROMATIC	319	31.383	0	C12 AROMATIC
320	31.471	0	C12 AROMATIC	321	31.617	0	C12 AROMATIC
322	31.667	0	C12 AROMATIC	323	31.924	0	C12 AROMATIC
324	31.983	0	C12 AROMATIC	325	32.095	0	C12 AROMATIC
326	32.210	0	C12 AROMATIC	327	32.340	0	C12 AROMATIC
328	32.380	0	C13 PRAFFIN	329	32.530	0	C12 AROMATIC
330	32.623	0	C12 AROMATIC	331	32.718	0	C12 AROMATIC
332	32.823	0	C12 AROMATIC	333	32.923	0	C12 AROMATIC
334	33.060	0	C12 AROMATIC	335	33.098	0	C13 PARAFFIN
336	33.147	0	C12 AROMATIC	337	33.450	0	C12 AROMATIC
338	33.802	0	C12 AROMATIC	339	33.817	0	C12 AROMATIC
340	36.057	0	C12 AROMATIC	341	7.340	0	C4 OLEFIN
342	8.227	0	C4 OLEFIN	343	8.350	0	C4 OLEFIN
344	13.673	0	C6 OLEFIN	345	15.493	0	C7 OLEFIN
346	16.156	0	C7 OLEFIN	347	16.637	0	C7 PARAFFIN
348	17.196	0	C7 OLEFIN	349	17.399	0	C8 OLEFIN
350	17.560	0	C8 OLEFIN	351	18.260	0	C8 OLEFIN
352	19.472	0	C8 PARAFFIN	353	20.063	0	C8 PARAFFIN
354	20.543	0	C9 OLEFIN	355	27.487	0	C11 OLEFIN
356	27.550	0	C10 AROMATIC	357	28.505	0	C10 AROMATIC
358	30.307	0	C11 AROMATIC	359	30.444	0	C11 AROMATIC
360	30.660	0	C11 AROMATIC	361	30.980	0	C12 AROMATIC
362	31.752	0	C12 AROMATIC	363	31.877	0	C12 AROMATIC
364	15.617	0	C7 OLEFIN	365	16.860	0	C7 PARAFFIN
366	18.080	0	C8 PARAFFIN	367	22.170	0	C9 PARAFFIN
368				369	13.310	0	C6 PARAFFIN
370	28.970	0	C10 AROMATIC	371	15.020	0	C7 OLEFIN
372	22.150	0	C9 PARAFFIN	373	27.125	0	C10 AROMATIC
374	28.460	0	C10 AROMATIC	375	3.926	0	C4 OLEFIN
376	13.520	0	C6 OLEFIN	377	29.413	0	C11 AROMATIC
378	35.220	0	C12 AROMATIC	379	28.550	0	C11 AROMATIC
380	29.032	0	C11 AROMATIC	381	33.376	0	C12 AROMATIC
382	3.293	0	C3 PARAFFIN	383	4.377	0	C3 PARAFFIN
384	7.206	0	C4 PARAFFIN	385	12.409	0	C6 PARAFFIN
386	14.953	0	C7 PARAFFIN	387	15.780	0	C7 OLEFIN
388	19.150	0	C8 PARAFFIN	389	20.760	0	C9 PARAFFIN
390	34.410	0	C12 AROMATIC	391	7.580	0	C4 PARAFFIN
392	8.850	0	C4 OLEFIN	393	9.700	0	C5 OLEFIN
394	10.120	0	C5 OLEFIN	395	11.790	0	C5 OLEFIN
396	12.150	0	C5 OLEFIN	397	18.650	0	C8 PARAFFIN
398	21.460	0	C9 PARAFFIN	399	21.890	0	C9 PARAFFIN

TABLE 1. HYDROCARBON IDENTIFICATIONS AND RETENTION TIMES (Continued)

HP5880 Calibration Table

CAL. NO.	Ret. Time	REF	Compound Name	CAL NO.	Ret. Time	REF	Compound Name
400	23.770	0	C10 PARAFFIN	401	26.630	0	C10 AROMATIC
402	27.310	0	C10 AROMATIC	403	27.850	0	C10 AROMATIC
404	32.460	0	C12 AROMATIC	405	34.590	0	C12 AROMATIC
406	35.870	0	C12 AROMATIC	407	13.140	0	C6 PARAFFIN
408	25.830	0	C9 AROMATIC	409	30.530	0	C11 AROMATIC
410	33.270	0	C12 AROMATIC	411	34.310	0	C12 AROMATIC
412	9.580	0	C5 OLEFIN	413	10.890	0	C5 OLEFIN
414	31.710	0	C12 AROMATIC	415	15.480	0	C7 OLEFIN
416	30.280	0	C11 AROMATIC				

APPENDIX B

GAS CHROMATOGRAPY
AUDIT QUESTIONNAIRE

		YES	NO
1)	Does the technicia[illegible] ave a c[illegible]rent cop[illegible] [illegible]f the RPM at or near the bench?	___	___
2)	Are gases traceable to, at a minimum, Research reagent grade gases?	___	___
3)	Are calibration results within 5% of the mean?	___	___
4)	Are outlying standards rejected? And is the rejection:	___	___
	a) documented?	___	___
	b) explained?	___	___
	c) reviewed?	___	___
5)	Are da[illegible] standar[illegible]		
	a) r[illegible] immediate[illegible] following the ca[illegible]bration?	___	___
	b) within ± 10% of known value?	___	___
6)	Are repeated measurements made of:		
	a) the highes[illegible] standard?	___	___
	b) the lowest standard?	___	___
7)	Have the standard deviations for:		
	a) the highest standard been computed?	___	___
	b) the lowest standard been computed?	___	___
8)	Have the initial control limits been computed for:		
	a) daily standard me[illegible]surem[illegible]its?	___	___
	b) duplicate measurements?	___	___
	c) replicate measurements?	___	___
9)	Are standards reanalyzed periodically?	___	___
10)	Are any samples analyzed in duplicate?	___	___
11)	Are replicate samples analyzed?	___	___
12)	Are QC samples analyzed?	___	___

		YES	NO
13)	Are QC sample control charts current?	___	___
14)	Are blinds analyzed?	___	___
15)	Are audit samples analyzed periodically?	___	___
16)	Are the following control samples analyzed:		
	a) spikes?	___	___
	b) interlaboratory?	___	___
	c) intralaboratory?	___	___
	d) old samples?	___	___
	e) other QC samples?	___	___
17)	Are NBS SRM samples analyzed regularly?	___	___
18)	Are accuracy measurements:		
	a) made on scheduled basis?	___	___
	b) within RPM specifications?	___	___
19)	Are precision measurements:		
	a) made on scheduled basis?	___	___
	b) within RPM specifications?	___	___
20)	Is GC preventive maintenance performed as required by RPM?	___	___
21)	Were corrective action procedures implemented as required?	___	___
22)	Are control charts and other QC records:		
	a) filled in an organized manner?	___	___
	b) recorded in laboratory notebook?	___	___
23)	Are computer printouts and reports spot-checked and validated?	___	___
24)	Have any of the following audits been performed in this laboratory?		
	a) Systems Audit?	___	___
	b) Performance audit?	___	___
25)	Are internal QC reports prepared on a timely basis to management?	___	___

APPENDIX C

FIGURES, FORMS AND EXAMPLES

TABLE 2. LEGEND FOR FIGURES 1, 2, AND 3

V1 = stainless steel needle valve

V2' V3' and V6 = shut-off valves (a)

V4 and V5 = 6-port electrically actuated gas sampling valve (attached to HP 5880A Gas Chromatograph).b)

M1 = 0 to 500 cm3/min mass flow meter

P1 = 0 to 200 Torr Wallace and Tierman Bourdon Gauge

(a) V2 is a stainless steel bellows valve on the canister. V3 and V6 are toggle valves; they may be stainless steel or brass.

(b) The gas sampling valve used should be capable of holding a vacuum down to 10 Torr for proper operation.

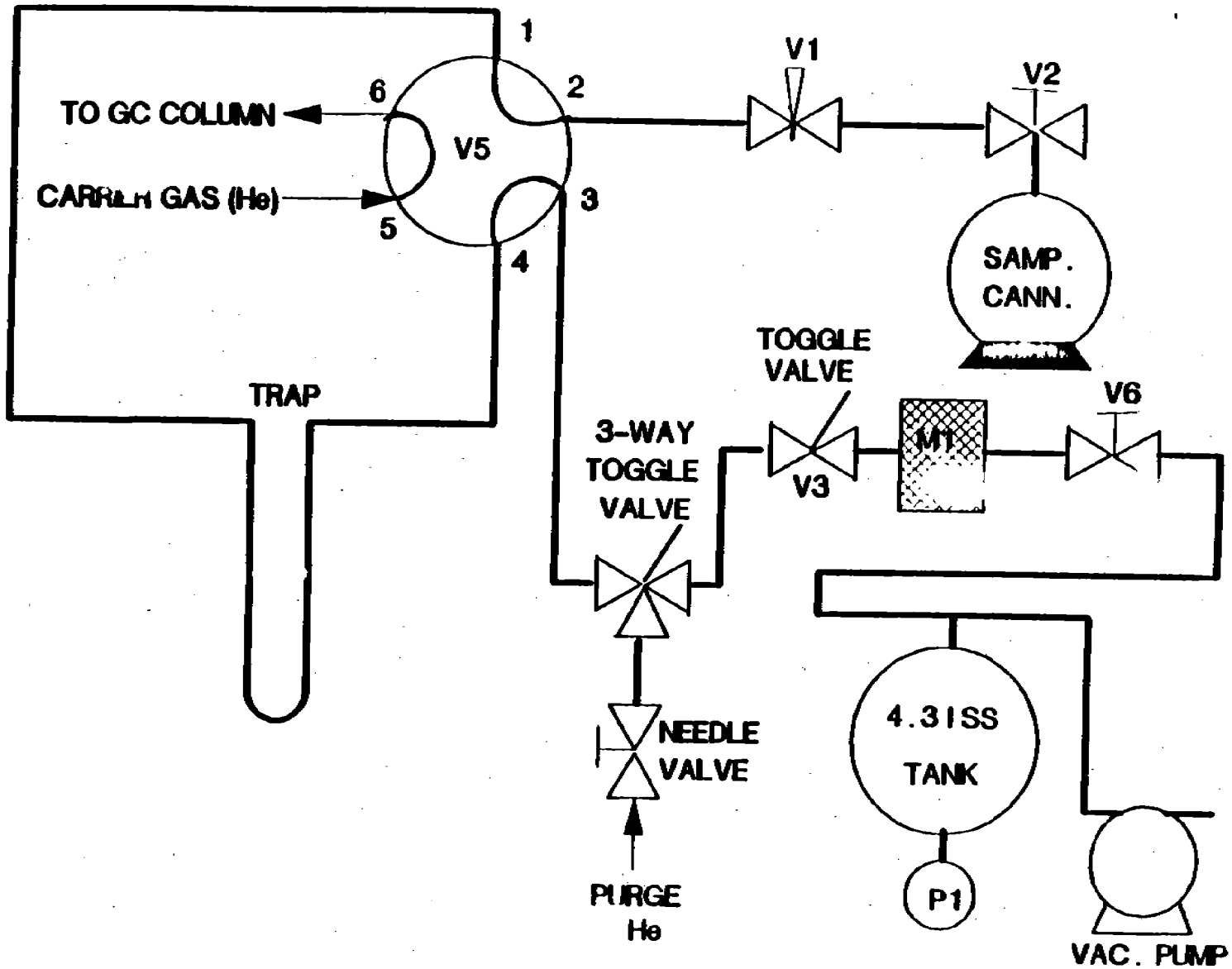

Figure 1. Inlet system–purge position.

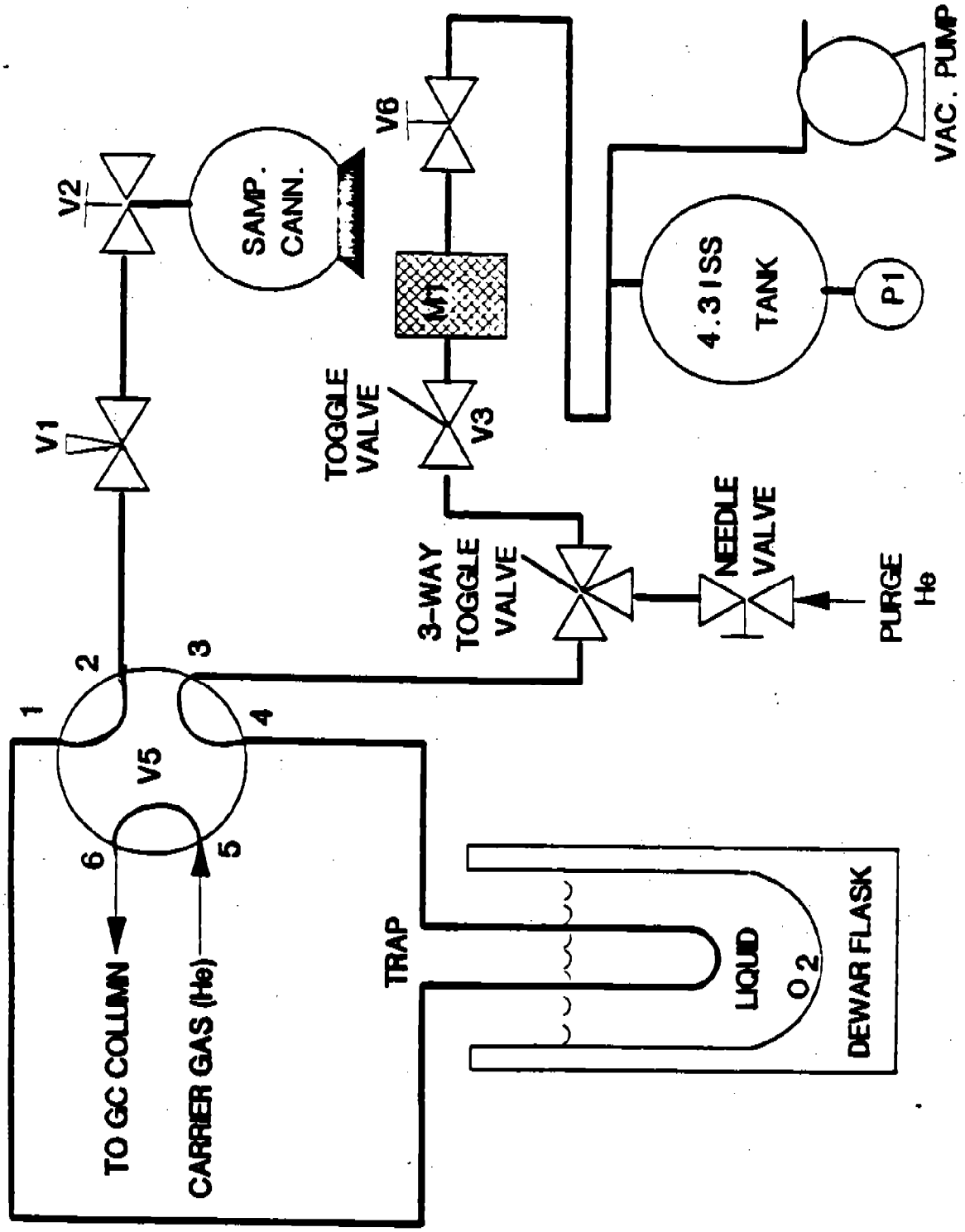

Figure 2. Inlet system—sample trapping position.

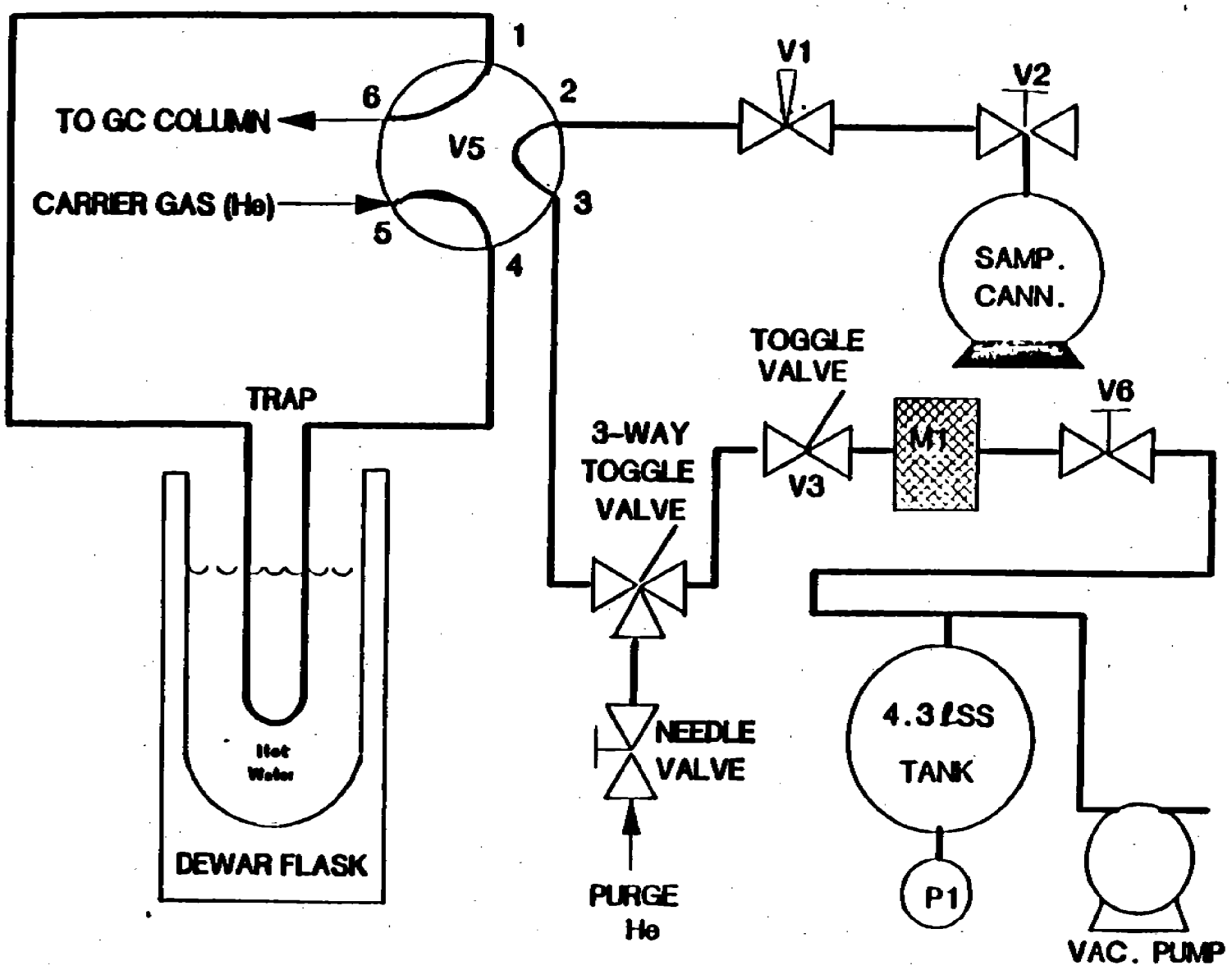

Figure 3. Inlet system—injection position.

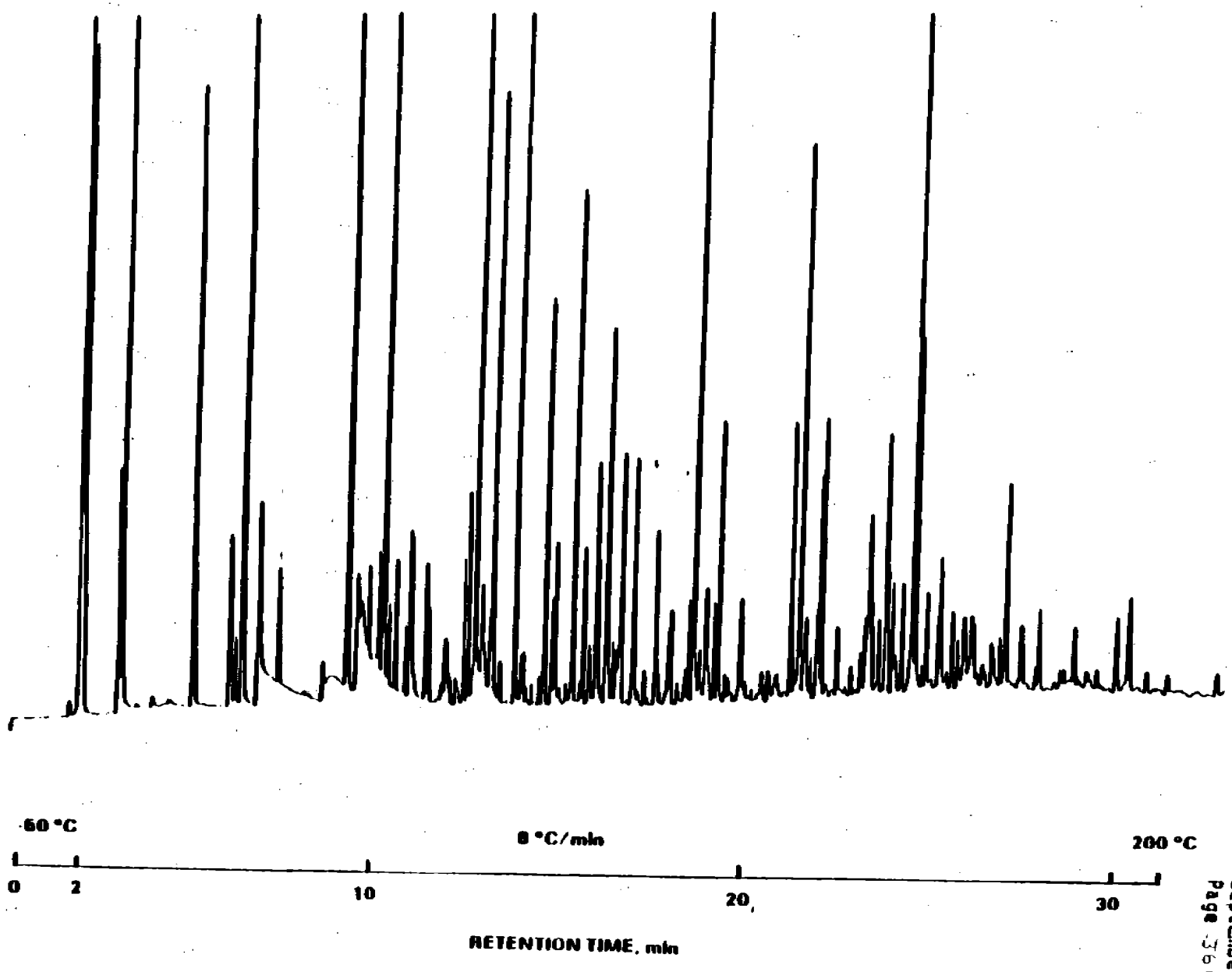

Figure 4. Gas chromatogram of ambient air C-2 to C-12 hydrocarbons separated on a DB-1 fused silica capillary column.

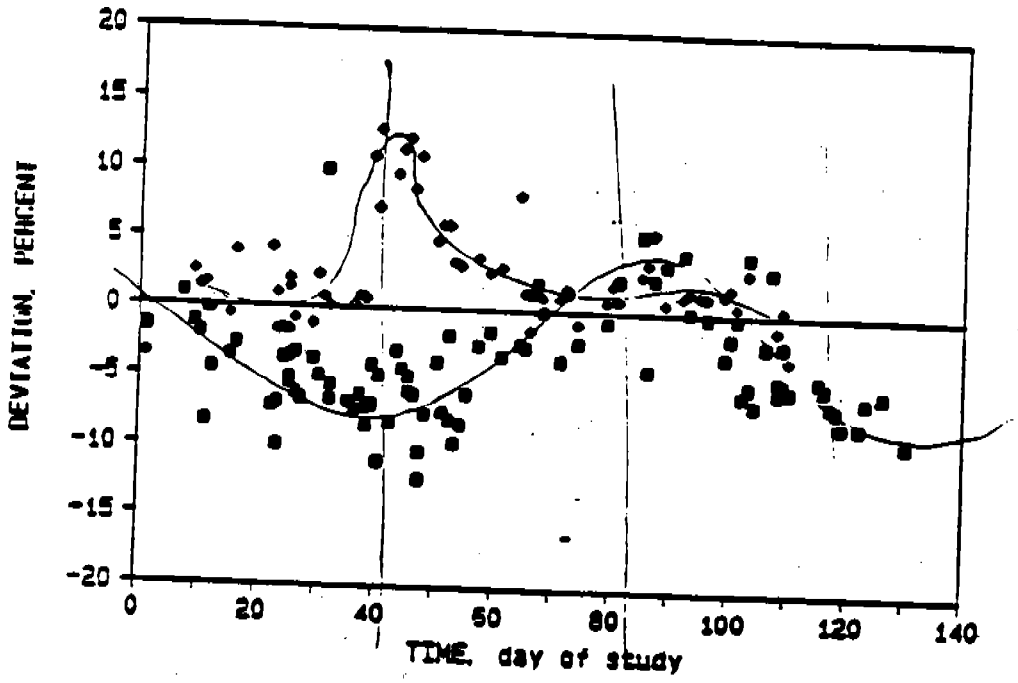

Figure 5. Deviation of measured NBS propane sample response from certified value (■) 1984 and (◇) 1985.

PROJECT _____ MEASUREMENT _____ UNITS _____

DATE																										
MEASUREMENT CODE 1																										
MEASUREMENT CODE 2																										
MEASUREMENT CODE 3																										
MEASURE RESULT 1																										
MEASURE RESULT 2																										
MEASURE RESULT 3																										
SUM																										
$\bar{X}$																										
s																										
AVERAGES, $\bar{X}$																										
	1	2	3	4	5	6	7	8	9	10	11	12	13	14	15	16	17	18	19	20	21	22	23	24	25	
STD DEV, s																										
COMMENTS (CORRECTIVE ACTION, ETC.)																										

PROJECT

MEASUREMENT

UNITS

COMMENTS (CORRECTIVE ACTION, ETC.)	RANGES, R		AVERAGES, $\overline{X}$	R	$\overline{X}$	SUM	MEASUREMENT RESULT 3	MEASUREMENT RESULT 2	MEASUREMENT RESULT 1	CODE 3	CODE 2	CODE 1	DATE
	5 0 5		10 5 0 5 10										
		1											
		2											
		3											
		4											
		5											
		6											
		7											
		8											
		9											
		10											
		11											
		12											
		13											
		14											
		15											
		16											
		17											
		18											
		19											
		20											
		21											
		22											
		23											
		24											
		25											

U. S. Department of Commerce
Philip M. Klutznick
Secretary

National Bureau of Standards
Ernest Ambler, Director

PROPANE 85-51-E

National Bureau of Standards

Certificate of Analysis

Standard Reference Material 1665b

Propane in Air

(Nominal Concentration 3 ppm)

(Mobile-Source Emission Gas Standard)

This Standard Reference Material is intended for use in the calibration of instruments used for the analysis of hydrocarbon in mobile-source emissions. It is not intended as a working standard, but rather as a primary standard to which the concentration of the daily working standards may be related.

Propane concentration: 2.83 ± 0.03 μmole/mole (ppm)

Cylinder Number: FF-18831 Sample Number: 85-51-E

The concentration of propane is relative to all other constituents of the gas. The uncertainty shown is the estimated upper limit of error of the propane concentration at the 95 percent confidence level. This uncertainty includes the inaccuracy of the gravimetric primary standard and the imprecision of intercomparison with the gravimetric standards. This sample is certified only for the concentration of propane. However, representative samples from the lot have been examined for the presence of other hydrocarbons. The estimated concentration of other hydrocarbons, expressed as propane, is 0.06 μmole/mole (ppm).

Each cylinder is individually analyzed and the concentration appearing above applies to the cylinder number and sample number identified on this certificate.

The original development and evaluation of the Propane in Air Series of these Standard Reference Materials was performed at the National Bureau of Standards by W. P. Schmidt and W. D. Dorko.

The overall direction and coordination of technical measurements leading to certification were performed in the Gas and Particulate Science Division under the chairmanship of E. E. Hughes and H. L. Rook.

The technical and support aspects involved in the preparation, certification, and issuance of this Standard Reference Material were coordinated through the Office of Standard Reference Materials by T. E. Gills.

Washington, D.C. 20234
January 31, 1980

George A. Uriano, Chief
Office of Standard Reference Materials

(over)

HP-5880A with DBI Calibration

A propane in air SRM was sampled at four sample lumes to determine the FID response factor.

RM: Propane = 2.83 ± 0.03 umole/mole (ppm)
= 8490 ppb as carbon
Cylinder Number = FF18831, Sample Number = 85-51-E

Analysis Results

ample ze, torr	Equivalent Propane Conc. ppbC	Area of Propane Peak	Response Factor Conc/area
~~80~~	~~28014.4~~		
80	8490	28014.4	~~0.303058~~
60	63675	21191.7	0.300471
40	4245	14013.5	0.302922
20	21225	6861.1	0.309353
			0.30395 mean
			0.30299 median

.304
.304

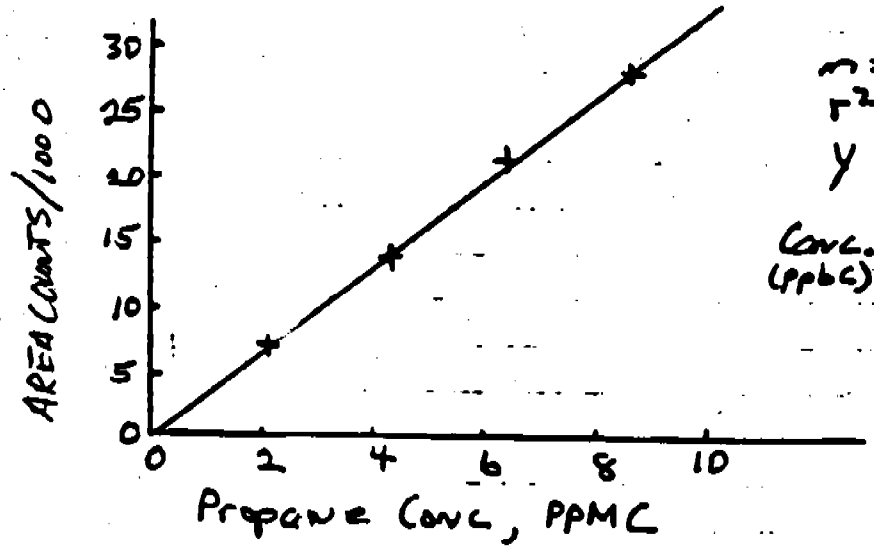

n = 4
$r^2 = 1.000$
$y = -0.139 + 3.328x$

Conc. (ppbC) = 0.30048 • (AREA) + 0.042

sed & Understood by me.	Date	Invented by	Date
		Recorded by	4/15/88

APPENDIX K

SPECIATED NMOC ANALYTICAL RESULTS
(Obtain from Neil Berg, U.S. EPA)

TECHNICAL REPORT DATA

(PLEASE READ INSTRUCTIONS ON THE REVERSE BEFORE COMPLETING)

1. REPORT NO. EPA-454/R-99-012	2.	3. RECIPIENT'S ACCESSION NO.
4. TITLE AND SUBTITLE 1993 Nonmethane Organic Compounds And Speciated Nonmethane Organic Compounds Monitoring Program		5. REPORT DATE 1/1/94
		6. PERFORMING ORGANIZATION CODE
7. AUTHOR(S) Radian Corporation Research Triangle Park, N. C. 27709		8. PERFORMING ORGANIZATION REPORT NO.
9. PERFORMING ORGANIZATION NAME AND ADDRESS		10. PROGRAM ELEMENT NO.
		11. CONTRACT/GRANT NO. 68-D2-0160
12. SPONSORING AGENCY NAME AND ADDRESS Office Of Air Quality Planning And Standards U. S. Environmental Protection Agency Research Triangle Park, N. C. 27711		13. TYPE OF REPORT AND PERIOD COVERED
		14. SPONSORING AGENCY CODE

15. SUPPLEMENTARY NOTES

16. ABSTRACT

IN CERTAIN AREAS OF THE COUNTRY WHERE THE NATIONAL AMBIENT AIR QUALITY STANDARD (NAAQS) FOR OZONE IS BEING EXCEEDED, ADDITIONAL MEASUREMENTS OF AMBIENT NONMETHANE ORGANIC COMPOUNDS (NMOC) ARE NEEDED TO ASSIST THE AFFECTED STATES IN DEVELOPING REVISED OZONE CONTROL STRATEGIES. BECAUSE OF PREVIOUS DIFFICULTY IN OBTAINING ACCURATE NMOC MEASUREMENTS, THE U.S. ENVIRONMENTAL PROTECTION AGENCY (EPA) HAS PROVIDED MONITORING AND ANALYTICAL ASSISTANCE TO THESE STATES, BEGINNING IN 1984 AND CONTINUING THROUGH THE 1993 NMOC MONITORING PROGRAM.

17. KEY WORDS AND DOCUMENT ANALYSIS

a. DESCRIPTORS	b. IDENTIFIERS/OPEN ENDED TERMS	c. COSATI FIELD/GROUP
Ozone Control Strategies National Ambient Air Quality Standards Nonmethane Organic Compound Monitoring Analysis 1993 NMOC Monitoring Program		
18. DISTRIBUTION STATEMENT UNLIMITED		21. NO. OF PAGES 424
		22. PRICE

510