TABLE C-3. SUMMARY OF THE NMOC DATA FOR NEWARK, NJ (NWNJ)

Sample Period: 6:00 a.m. to 9:00 a.m.

Date Sampled	Julian Date Sampled	Sample ID Number	Sample Canister Number	Sample Pressure (psig)	Analysis Pressure (psig)	Radian Channel	Mean NMOC ppmC
10-Aug-92	223	1799	657	15.8	14.0	C	0.405
11-Aug-92	224	1800	690	15.4	14.0	C	0.816
12-Aug-92	225	1820	815	15.0	14.0	C	0.382
13-Aug-92	226	1838	197	10.0	10.0	C	0.188
14-Aug-92	227	1854	140	15.8	16.0	C	0.244
14-Aug-92	227	1854	140	15.8	16.0	C	0.379
14-Aug-92	227	1855	915	15.8	16.0	C	0.306
17-Aug-92	230	1942	837	16.2	20.0	C	0.498
19-Aug-92	232	1943	198	14.1	15.0	D	0.740
20-Aug-92	233	1935	38	14.0	14.0	D	0.523
21-Aug-92	234	2012	848	14.1	14.0	C	0.436
21-Aug-92	234	2012	848	14.1	14.0	C	0.644
24-Aug-92	237	2075	838	14.4	14.0	B	0.712
25-Aug-92	238	2072	83	15.4	15.0	A	0.577
26-Aug-92	239	2063	649	16.2	16.0	C	3.030
26-Aug-92	239	2070	832	16.2	15.0	D	2.987
27-Aug-92	240	2095	770	15.8	15.0	D	1.670
28-Aug-92	241	2118	137	14.0	14.0	B	0.533
31-Aug-92	244	2187	784	17.2	18.0	B	0.338
01-Sep-92	245	2211	72	15.0	16.0	B	1.760
02-Sep-92	246	2213	644	15.9	16.0	C	0.465
03-Sep-92	247	2239	57	14.3	16.0	A	1.690
04-Sep-92	248	2243	305	15.0	16.0	B	0.906
08-Sep-92	252	2285	852	18.0	19.0	B	0.378
09-Sep-92	253	2317	56	14.1	15.0	B	0.517
10-Sep-92	254	2326	823	15.8	16.0	C	1.806
10-Sep-92	254	2327	112	15.8	16.0	B	1.990
11-Sep-92	255	2328	551	17.0	18.0	C	0.484
14-Sep-92	258	2366	684	20.1	20.0	D	3.537
14-Sep-92	258	2367	114	20.1	21.0	C	3.567
15-Sep-92	259	2397	659	19.9	20.0	D	1.579

TABLE C-3. SUMMARY OF THE NMOC DATA FOR NEWARK, NJ (NWNJ)

Sample Period: 6:00 a.m. to 9:00 a.m.

Date Sampled	Julian Date Sampled	Sample ID Number	Sample Canister Number	Sample Pressure (psig)	Analysis Pressure (psig)	Radian Channel	Mean NMOC ppmC
16-Sep-92	260	2399	889	21.0	20.0	C	0.855
22-Sep-92	266	2491	39	14.9	14.0	B	2.960
23-Sep-92	267	2536	184	15.0	12.0	D	1.970
28-Sep-92	272	2551	33	14.3	13.0	A	4.780
29-Sep-92	273	2588	114	16.0	16.0	C	0.477
29-Sep-92	273	2588	114	16.0	16.0	C	0.378
29-Sep-92	273	2590	8	16.0	16.0	D	0.473
29-Sep-92	273	2590	8	16.0	16.0	D	0.389
30-Sep-92	274	2616	905	20.6	20.0	A	0.353

Plainfield, NJ (PLNJ)

1992 NMOC Program (AIRS # 34-039-5001)

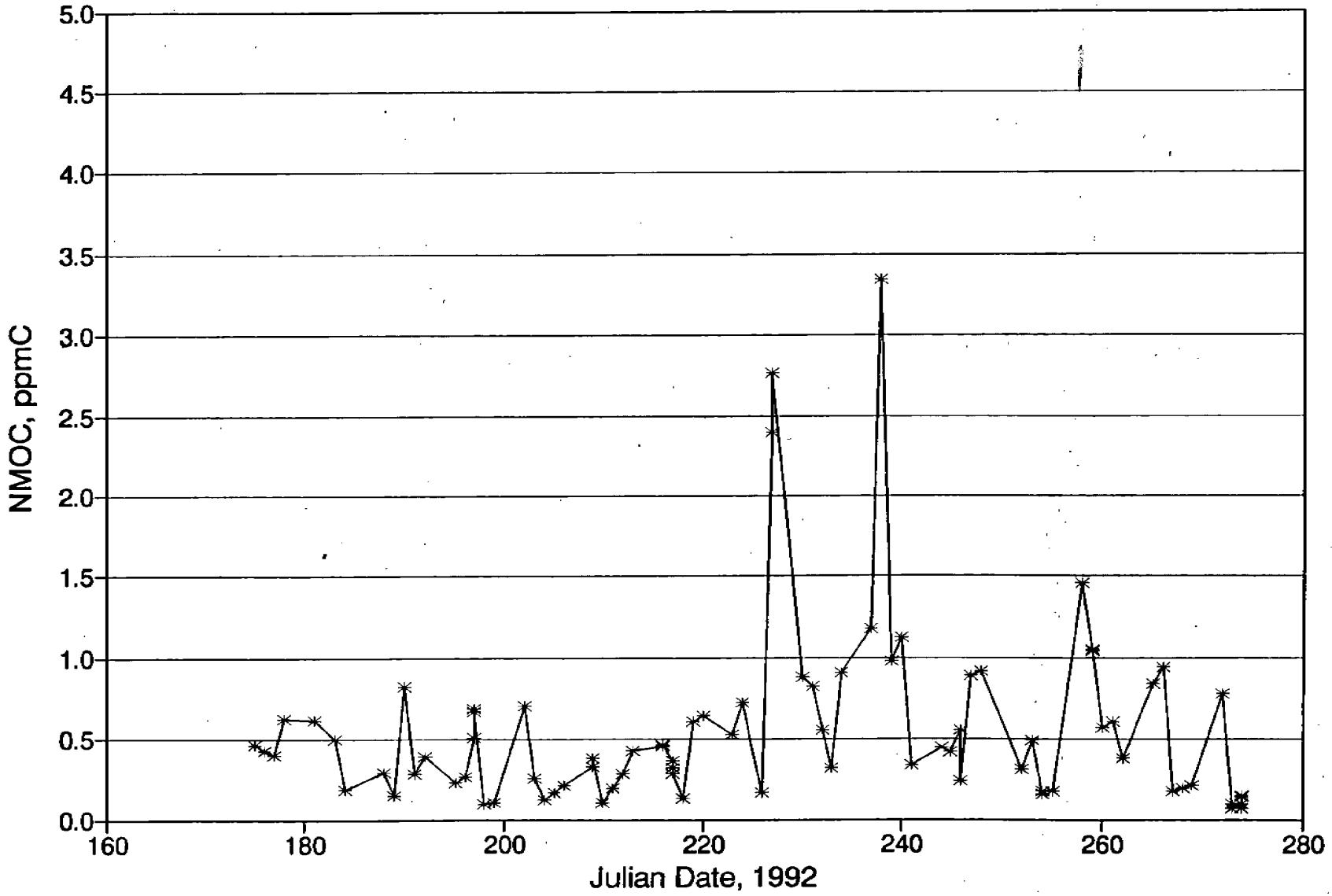

TABLE C-4. SUMMARY OF THE 1992 NMOC DATA FOR PLAINFIELD, NJ (PLNJ)

Sample Period: 6:00 a.m. to 9:00 a.m.

Date Sampled	Julian Date Sampled	Sample ID Number	Sample Canister Number	Sample Pressure (psig)	Analysis Pressure (psig)	Radian Channel	Mean NMOC ppmC
23-Jun-92	175	1048	148	13.5	14.0	C	0.465
24-Jun-92	176	1056	686	13.0	13.0	C	0.428
25-Jun-92	177	1063	648	13.0	12.0	A	0.400
26-Jun-92	178	1058	100	12.2	12.0	D	0.623
29-Jun-92	181	1060	928	15.1	14.0	C	0.620
01-Jul-92	183	1097	151	12.0	13.0	B	0.503
02-Jul-92	184	1116	77	12.2	12.0	C	0.188
06-Jul-92	188	1148	56	12.0	14.0	A	0.294
07-Jul-92	189	1168	707	13.4	13.0	D	0.147
08-Jul-92	190	1239	97	12.2	12.0	C	0.829
09-Jul-92	191	1236	762	12.6	12.5	B	0.285
10-Jul-92	192	1224	837	12.0	12.0	A	0.394
13-Jul-92	195	1235	796	13.5	13.0	A	0.232
14-Jul-92	196	1279	649	12.8	12.5	D	0.264
15-Jul-92	197	1275	130	16.2	16.0	C	0.513
15-Jul-92	197	1275	130	16.2	16.0	C	0.688
15-Jul-92	197	1276	921	16.2	16.0	D	0.671
16-Jul-92	198	1282	8	12.0	12.0	C	0.099
17-Jul-92	199	1340	104	12.2	12.0	C	0.102
20-Jul-92	202	1351	929	13.8	14.0	C	0.707
21-Jul-92	203	1393	724	13.0	13.0	C	0.260
22-Jul-92	204	1402	164	12.3	13.0	C	0.126
23-Jul-92	205	1463	171	12.3	12.0	D	0.164
24-Jul-92	206	1466	129	12.2	12.0	D	0.212
27-Jul-92	209	1464	140	16.2	16.0	D	0.326
27-Jul-92	209	1465	28	16.2	16.0	B	0.386
28-Jul-92	210	1531	889	12.1	12.0	C	0.106
29-Jul-92	211	1529	154	12.2	12.0	D	0.197
30-Jul-92	212	1525	782	13.0	13.0	A	0.280
31-Jul-92	213	1593	799	12.8	13.0	D	0.432
03-Aug-92	216	1585	704	13.8	14.0	C	0.458
03-Aug-92	216	1585	704	13.8	14.0	C	0.463

TABLE C-4. SUMMARY OF THE 1992 NMOC DATA FOR PLAINFIELD, NJ (PLNJ)

Sample Period: 6:00 a.m. to 9:00 a.m.

Date Sampled	Julian Date Sampled	Sample ID Number	Sample Canister Number	Sample Pressure (psig)	Analysis Pressure (psig)	Radian Channel	Mean NMOC ppmC
04-Aug-92	217	1632	638	16.9	18.0	C	0.364
04-Aug-92	217	1650	618	16.9	18.0	C	0.321
04-Aug-92	217	1650	618	16.9	18.0	C	0.280
05-Aug-92	218	1639	730	13.4	15.0	D	0.133
06-Aug-92	219	1708	54	12.4	14.0	D	0.611
07-Aug-92	220	1702	883	12.5	14.0	C	0.648
10-Aug-92	223	1819	675	14.0	14.0	D	0.526
11-Aug-92	224	1804	868	12.1	12.0	D	0.724
13-Aug-92	226	1809	36	12.2	12.0	C	0.165
14-Aug-92	227	1922	677	17.2	18.0	B	2.392
14-Aug-92	227	1923	704	17.2	17.0	B	2.762
17-Aug-92	230	1931	165	13.0	12.5	A	0.880
18-Aug-92	231	1926	882	12.1	12.0	A	0.824
19-Aug-92	232	1938	724	13.1	14.0	D	0.553
20-Aug-92	233	1932	657	13.0	13.0	D	0.318
21-Aug-92	234	2005	178	13.0	12.0	C	0.907
24-Aug-92	237	2071	854		14.0	A	1.180
25-Aug-92	238	2065	633	20.5	11.0	C	3.347
26-Aug-92	239	2150	50	12.0	13.0	A	0.980
27-Aug-92	240	2151	130	12.0	13.0	B	1.120
28-Aug-92	241	2117	825	12.0	12.0	A	0.336
31-Aug-92	244	2160	631	13.8	15.0	C	0.449
01-Sep-92	245	2224	406	12.8	14.0	C	0.420
02-Sep-92	246	2225	49	12.3	14.0	B	0.559
02-Sep-92	246	2225	49	12.3	14.0	B	0.240
03-Sep-92	247	2241	500	12.3	14.0	A	0.892
04-Sep-92	248	2269	104	12.2	15.0	C	0.918
08-Sep-92	252	2275	706	12.9	14.0	B	0.309
09-Sep-92	253	2310	148	12.6	14.0	A	0.492
10-Sep-92	254	2311	716	10.1	11.0	D	0.162
10-Sep-92	254	2312	979	10.1	10.5	C	0.176
11-Sep-92	255	2376	406	12.3	14.0	A	0.180

TABLE C-4. SUMMARY OF THE 1992 NMOC DATA FOR PLAINFIELD, NJ (PLNJ)

Sample Period: 6:00 a.m. to 9:00 a.m.

Date Sampled	Julian Date Sampled	Sample ID Number	Sample Canister Number	Sample Pressure (psig)	Analysis Pressure (psig)	Radian Channel	Mean NMOC ppmC
14-Sep-92	258	2400	631	14.7	16.0	D	1.457
15-Sep-92	259	2377	641	12.2	12.0	C	1.038
15-Sep-92	259	2381	304	12.2	12.0	C	1.051
16-Sep-92	260	2401	978	13.0	14.0	C	0.573
17-Sep-92	261	2438	653	13.2	15.0	A	0.606
18-Sep-92	262	2445	798	13.1	16.0	C	0.383
21-Sep-92	265	2513	989	13.8	13.0	D	0.847
22-Sep-92	266	2514	695	13.2	11.0	A	0.944
23-Sep-92	267	2502	917	12.7	13.0	C	0.179
24-Sep-92	268	2518	301	13.0	13.0	A	0.190
25-Sep-92	269	2566	129	12.9	12.0	C	0.214
28-Sep-92	272	2564	304	17.4	18.0	A	0.782
28-Sep-92	273	2569	645	17.2	16.0	C	0.070
29-Sep-92	273	2587	923	17.2	17.0	C	0.099
30-Sep-92	274	2612	72	17.0	17.0	B	0.096
30-Sep-92	274	2612	72	17.0	17.0	B	0.136
30-Sep-92	274	2619	657	17.0	17.0	B	0.065
30-Sep-92	274	2619	657	17.0	17.0	B	0.146

Raleigh, NC (R1NC)

1992 NMOC Program (AIRS # 37-183-0015)

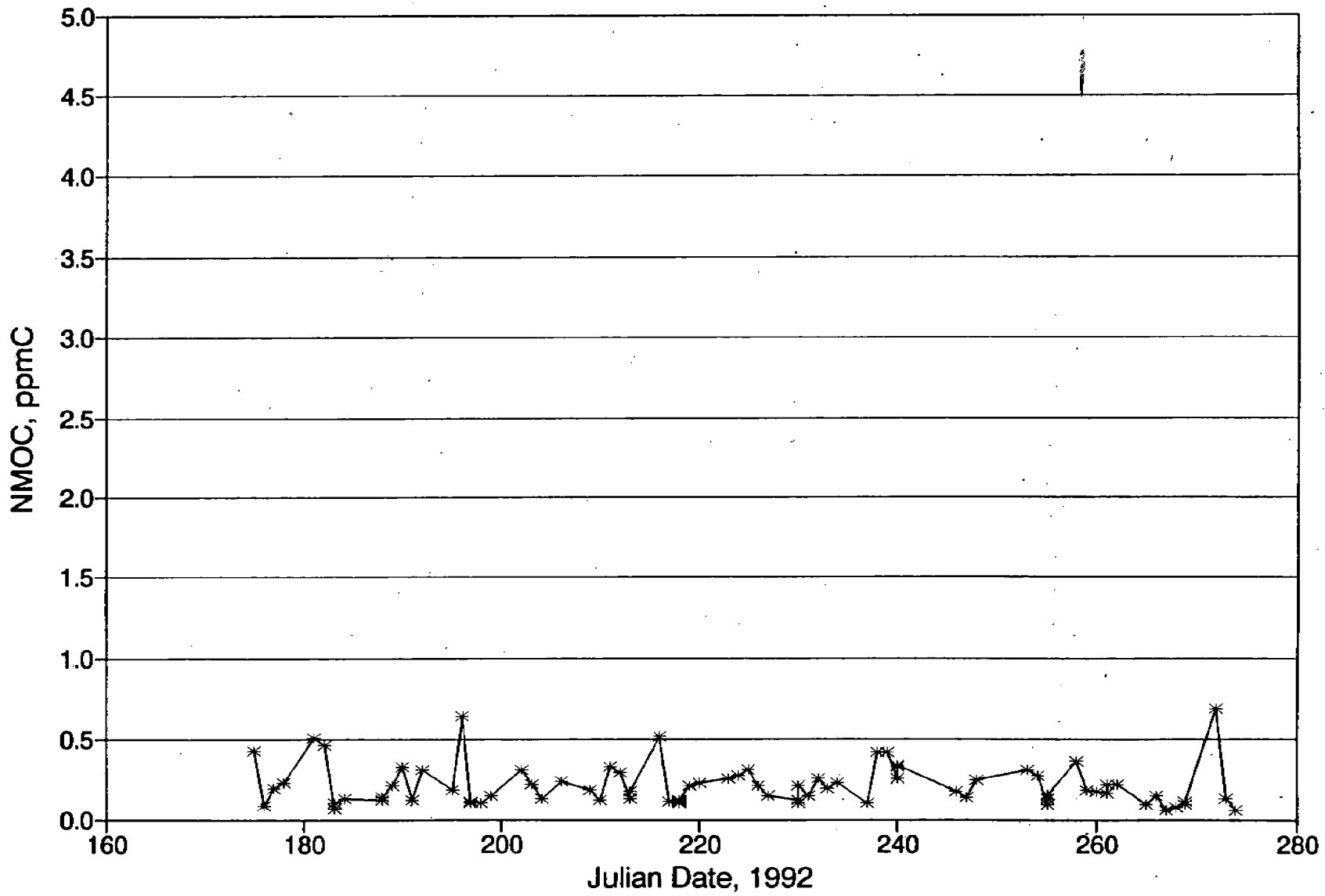

TABLE C-5. SUMMARY OF THE 1992 NMOC DATA FOR RALEIGH, NC (R1NC)

Sample Period: 6:00 a.m. to 9:00 a.m.

Date Sampled	Julian Date Sampled	Sample ID Number	Sample Canister Number	Sample Pressure (psig)	Analysis Pressure (psig)	Radian Channel	Mean NMOC ppmC
23-Jun-92	175	1023	649	10.5	10.0	D	0.428
24-Jun-92	176	1024	308	8.0	6.0	B	0.085
25-Jun-92	177	1025	765	8.0	8.0	A	0.195
26-Jun-92	178	1076	137	10.0	10.0	B	0.229
29-Jun-92	181	1078	304	11.0	10.0	B	0.511
30-Jun-92	182	1084	36	6.0	7.0	D	0.468
01-Jul-92	183	1080	850	10.0	9.0	C	0.068
01-Jul-92	183	1080	850	10.0	9.0	C	0.106
02-Jul-92	184	1077	166	10.0	8.0	D	0.130
06-Jul-92	188	1154	675	8.0	7.0	B	0.119
06-Jul-92	188	1155	653	8.0	7.0	A	0.136
07-Jul-92	189	1161	176	10.5	10.0	D	0.216
08-Jul-92	190	1158	131	10.0	8.0	B	0.328
09-Jul-92	191	1256	870	11.0	10.0	C	0.122
10-Jul-92	192	1257	129	10.0	9.0	D	0.314
13-Jul-92	195	1244	164	10.0	9.0	D	0.184
14-Jul-92	196	1247	77	8.0	8.0	A	0.647
15-Jul-92	197	1252	789	10.0	9.0	C	0.101
15-Jul-92	197	1253	621	10.0	9.0	C	0.113
16-Jul-92	198	1371	704	10.0	9.0	D	0.101
17-Jul-92	199	1373	813	9.0	8.0	D	0.153
20-Jul-92	202	1385	850	11.0	10.0	D	0.311
21-Jul-92	203	1379	894	10.5	10.0	D	0.225
22-Jul-92	204	1388	927	9.0	8.0	C	0.133
24-Jul-92	206	1518	684	9.0	8.0	B	0.239
27-Jul-92	209	1520	33	10.0	10.0	B	0.188
28-Jul-92	210	1515	808	10.0	9.0	A	0.125
29-Jul-92	211	1519	165	10.0	9.0	B	0.332
30-Jul-92	212	1517	670	11.0	10.0	A	0.290
31-Jul-92	213	1619	836	11.0	10.0	C	0.135
31-Jul-92	213	1620	831	12.0	11.0	B	0.173
03-Aug-92	216	1630	807	11.5	14.0	B	0.520

TABLE C-5. SUMMARY OF THE 1992 NMOC DATA FOR RALEIGH, NC (R1NC)

Sample Period: 6:00 a.m. to 9:00 a.m.

Date Sampled	Julian Date Sampled	Sample ID Number	Sample Canister Number	Sample Pressure (psig)	Analysis Pressure (psig)	Radian Channel	Mean NMOC ppmC
04-Aug-92	217	1628	171	6.0	5.0	C	0.111
05-Aug-92	218	1614	878	16.0	15.0	A	0.106
05-Aug-92	218	1614	878	16.0	15.0	A	0.113
05-Aug-92	218	1615	911	17.0	15.0	D	0.118
06-Aug-92	219	1787	28	11.0	11.0	C	0.212
07-Aug-92	220	1788	155	9.0	9.0	C	0.227
10-Aug-92	223	1783	80	10.0	10.0	D	0.260
11-Aug-92	224	1782	660	11.0	10.0	D	0.276
12-Aug-92	225	1789	198	10.0	10.0	A	0.311
13-Aug-92	226	1786	162	10.0	10.0	D	0.211
14-Aug-92	227	1913	825	10.0	10.0	C	0.151
17-Aug-92	230	1915	154	11.0	10.0	D	0.118
17-Aug-92	230	1916	149	11.0	11.0	C	0.101
17-Aug-92	230	1916	149	11.0	11.0	C	0.213
18-Aug-92	231	1920	816	10.0	10.0	D	0.146
19-Aug-92	232	1912	166	10.0	10.0	B	0.254
20-Aug-92	233	1914	889	10.5	10.0	D	0.194
21-Aug-92	234	2051	651	10.0	10.0	A	0.231
24-Aug-92	237	2053	667	10.0	10.0	D	0.105
25-Aug-92	238	2054	104	10.0	10.0	D	0.421
26-Aug-92	239	2052	193	10.0	10.0	B	0.418
27-Aug-92	240	2206	915	12.0	12.0	A	0.254
27-Aug-92	240	2207	179	12.0	12.0	D	0.330
27-Aug-92	240	2207	179	12.0	12.0	D	0.339
02-Sep-92	246	2209	653	9.0	10.0	B	0.178
03-Sep-92	247	2208	114	11.0	11.0	B	0.143
04-Sep-92	248	2289	113	11.0	11.0	D	0.248
09-Sep-92	253	2290	552	10.0	11.0	C	0.313
10-Sep-92	254	2288	883	10.0	10.0	C	0.274
11-Sep-92	255	2385	990	15.0	18.0	D	0.094
11-Sep-92	255	2385	990	15.0	18.0	D	0.127
11-Sep-92	255	2387	553	15.0	18.0	C	0.155

TABLE C-5. SUMMARY OF THE 1992 NMOC DATA FOR RALEIGH, NC (R1NC)

Sample Period: 6:00 a.m. to 9:00 a.m.

Date Sampled	Julian Date Sampled	Sample ID Number	Sample Canister Number	Sample Pressure (psig)	Analysis Pressure (psig)	Radian Channel	Mean NMOC ppmC
14-Sep-92	258	2384	635	11.0	12.0	B	0.369
15-Sep-92	259	2382	4	12.0	12.0	D	0.188
16-Sep-92	260	2383	587	9.0	8.0	A	0.180
17-Sep-92	261	2496	648	10.0	10.0	C	0.171
17-Sep-92	261	2497	683	10.0	10.0	D	0.225
18-Sep-92	262	2492	707	9.0	10.0	D	0.223
21-Sep-92	265	2494	102	10.0	10.0	C	0.099
22-Sep-92	266	2495	684	10.0	10.0	B	0.145
23-Sep-92	267	2493	865	11.0	10.0	A	0.055
24-Sep-92	268	2608	922	11.0	11.0	D	0.080
25-Sep-92	269	2601	801	9.0	10.0	B	0.093
25-Sep-92	269	2607	118	9.0	10.0	C	0.113
28-Sep-92	272	2600	987	10.0	10.0	A	0.692
29-Sep-92	273	2602	786	9.0	10.0	B	0.134
30-Sep-92	274	2606	834	11.0	11.0	D	0.060

Salt Lake City, Utah (S2UT)

1992 NMOC Program (AIRS # 49-035-3001)

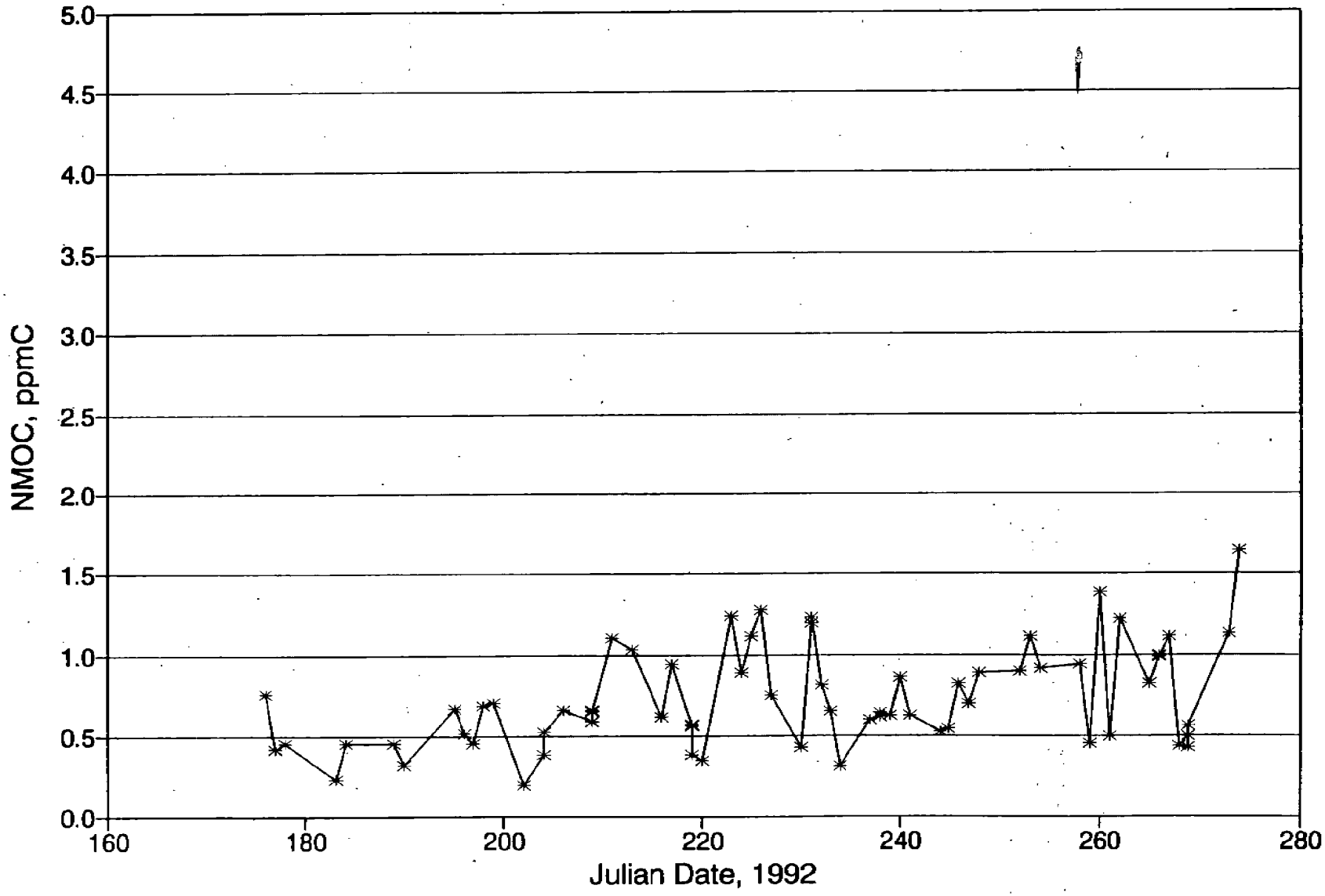

TABLE C-6. SUMMARY OF THE 1992 NMOC DATA FOR SALT LAKE CITY, UTAH (S2UT)

Sample Period: 6:00 a.m. to 9:00 a.m.

Date Sampled	Julian Date Sampled	Sample ID Number	Sample Canister Number	Sample Pressure (psig)	Analysis Pressure (psig)	Radian Channel	Mean NMOC ppmC
24-Jun-92	176	1016	118	11.0	11.0	A	0.763
25-Jun-92	177	1027	138	11.0	10.0	C	0.424
26-Jun-92	178	1067	823	11.0	9.0	A	0.458
01-Jul-92	183	1082	991	10.5	9.0	B	0.232
02-Jul-92	184	1104	998	11.0	10.0	D	0.458
07-Jul-92	189	1140	767	12.0	12.0	C	0.460
08-Jul-92	190	1162	994	11.0	10.0	B	0.317
13-Jul-92	195	1205	996	12.0	11.0	C	0.669
14-Jul-92	196	1229	993	11.0	10.0	C	0.517
15-Jul-92	197	1259	997	11.0	10.0	A	0.460
16-Jul-92	198	1277	992	11.0	10.0	A	0.686
17-Jul-92	199	1296	990	11.0	10.0	C	0.704
20-Jul-92	202	1487	37	11.0	10.0	C	0.193
22-Jul-92	204	1377	994	15.0	13.0	D	0.386
22-Jul-92	204	1377	994	15.0	13.0	D	0.527
22-Jul-92	204	1378	993	15.0	13.0	C	0.528
24-Jul-92	206	1460	992	11.0	10.0	D	0.662
27-Jul-92	209	1455	990	15.0	16.0	A	0.593
27-Jul-92	209	1456	997	15.0	16.0	D	0.665
27-Jul-92	209	1456	997	15.0	16.0	D	0.656
29-Jul-92	211	1505	993	12.0	10.0	D	1.108
31-Jul-92	213	1568	129	11.0	10.0	B	1.037
03-Aug-92	216	1622	855	12.0	12.0	D	0.619
04-Aug-92	217	1626	990	12.0	9.0	A	0.947
06-Aug-92	219	1717	997	15.0	15.0	C	0.566
06-Aug-92	219	1717	997	15.0	15.0	C	0.570
06-Aug-92	219	1718	991	15.0	15.0	C	0.388
07-Aug-92	220	1707	918	11.0	10.0	D	0.348
10-Aug-92	223	1735	165	11.0	10.0	A	1.240
11-Aug-92	224	1758	995	12.0	10.0	C	0.889
12-Aug-92	225	1784	992	16.0	14.0	B	1.117

TABLE C-6. SUMMARY OF THE 1992 NMOC DATA FOR SALT LAKE CITY, UTAH (S2UT)

Sample Period: 6:00 a.m. to 9:00 a.m.

Date Sampled	Julian Date Sampled	Sample ID Number	Sample Canister Number	Sample Pressure (psig)	Analysis Pressure (psig)	Radian Channel	Mean NMOC ppmC
12-Aug-92	225	1785	990	16.0	14.0	C	1.118
13-Aug-92	226	1821	998	11.0	10.0	B	1.277
14-Aug-92	227	1842	993	11.0	9.0	D	0.758
17-Aug-92	230	1858	991	8.0	8.0	D	0.432
18-Aug-92	231	1884	996	16.0	15.0	D	1.193
18-Aug-92	231	1885	994	16.0	15.0	C	1.230
19-Aug-92	232	1944	992	11.0	10.0	C	0.814
20-Aug-92	233	1947	766	11.0	10.0	C	0.655
21-Aug-92	234	1987	999	11.0	10.0	C	0.310
24-Aug-92	237	2017	991	11.0	9.0	C	0.597
25-Aug-92	238	2046	994	11.0	10.0	B	0.617
25-Aug-92	238	2046	994	11.0	10.0	B	0.645
26-Aug-92	239	2062	990	9.0	9.0	C	0.628
27-Aug-92	240	2094	992	11.0	9.0	C	0.861
28-Aug-92	241	2102	999	11.0	10.0	C	0.626
31-Aug-92	244	2135	991	11.0	9.0	D	0.528
01-Sep-92	245	2159	994	11.0	10.0	D	0.548
02-Sep-92	246	2201	996	11.0	10.0	A	0.823
03-Sep-92	247	2215	999	11.0	10.0	C	0.702
04-Sep-92	248	2245	991	11.0	12.0	D	0.890
08-Sep-92	252	2255	994	11.0	10.0	A	0.902
09-Sep-92	253	2281	996	11.0	10.0	C	1.116
10-Sep-92	254	2307	990	11.0	10.0	A	0.912
14-Sep-92	258	2344	991	11.0	10.0	A	0.944
15-Sep-92	259	2359	997	11.0	10.0	C	0.457
16-Sep-92	260	2370	999	11.0	10.0	A	1.383
17-Sep-92	261	2406	995	16.0	14.0	A	0.500
17-Sep-92	261	2410	148	16.0	14.0	A	0.500
18-Sep-92	262	2420	996	11.0	10.0	A	1.220
21-Sep-92	265	2433	991	11.0	10.0	A	0.823
22-Sep-92	266	2457	998	16.0	14.0	A	0.993

TABLE C-6. SUMMARY OF THE 1992 NMOC DATA FOR SALT LAKE CITY, UTAH (S2UT)

Sample Period: 6:00 a.m. to 9:00 a.m.

Date Sampled	Julian Date Sampled	Sample ID Number	Sample Canister Number	Sample Pressure (psig)	Analysis Pressure (psig)	Radian Channel	Mean NMOC ppmC
22-Sep-92	266	2458	993	16.0	13.0	A	0.992
23-Sep-92	267	2487	995	16.0	16.0	C	1.111
24-Sep-92	268	2505	800	16.0	12.0	A	0.436
25-Sep-92	269	2525	991	16.5	13.0	D	0.501
25-Sep-92	269	2525	991	16.5	13.0	D	0.433
25-Sep-92	269	2526	994	16.5	12.0	C	0.561
29-Sep-92	273	2573	999	15.0	14.0	A	1.129
30-Sep-92	274	2589	36	12.5	12.0	A	1.648

Salt Lake City, UT (S3UT)

1992 NMOC Program (AIRS # 49-011-0001)

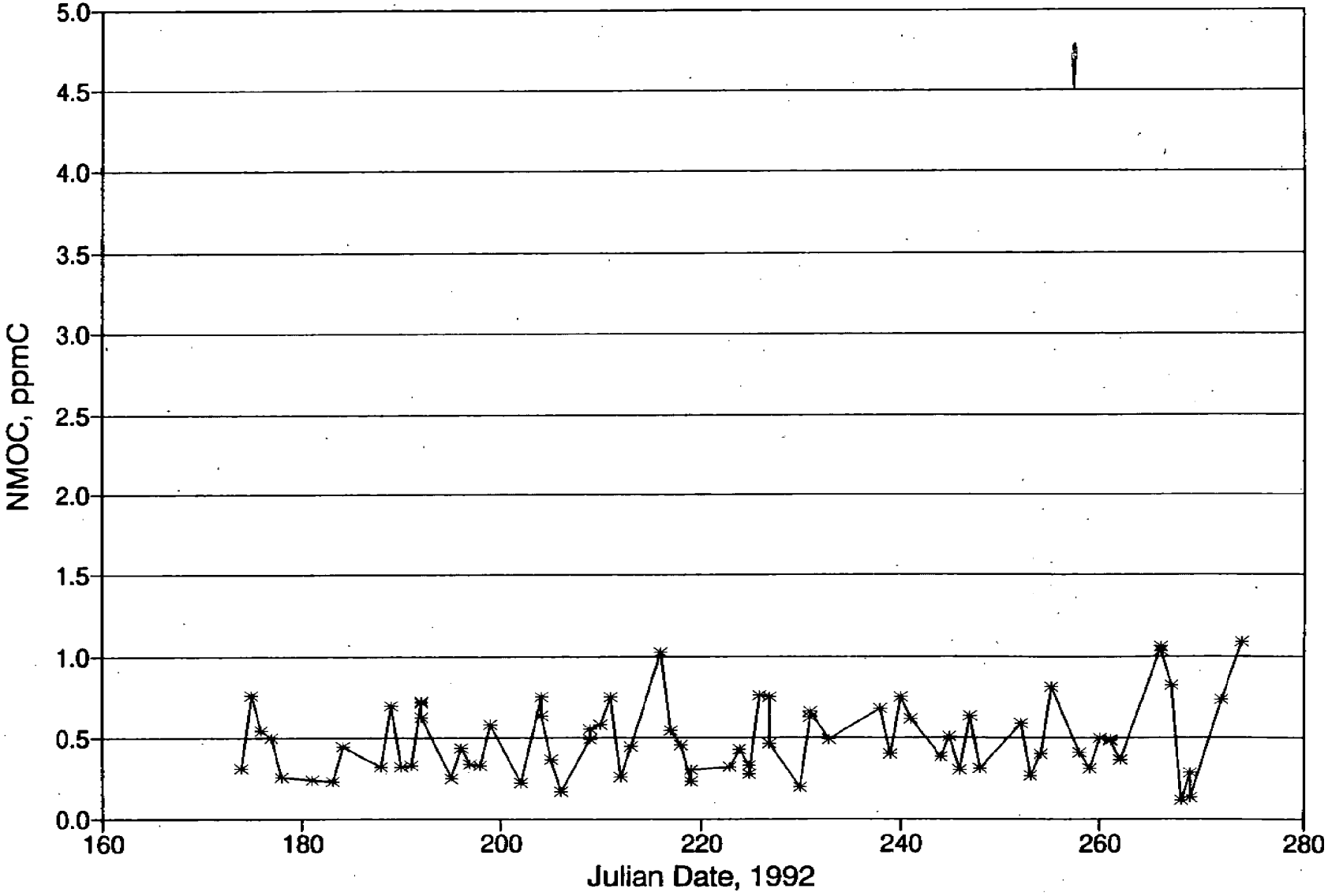

TABLE C-7. SUMMARY OF THE 1992 NMOC DATA FOR SALT LAKE CITY, UTAH (S3UT)

Sample Period: 6:00 a.m. to 9:00 a.m.

Date Sampled	Julian Date Sampled	Sample ID Number	Sample Canister Number	Sample Pressure (psig)	Analysis Pressure (psig)	Radian Channel	Mean NMOC ppmC
22-Jun-92	174	1005	874	12.0	13.0	B	0.311
23-Jun-92	175	1007	111	12.0	14.0	A	0.763
24-Jun-92	176	1015	623	11.0	12.0	A	0.542
25-Jun-92	177	1026	635	8.0	10.0	C	0.497
26-Jun-92	178	1059	783	9.0	8.0	D	0.257
29-Jun-92	181	1062	86	9.0	8.0	C	0.240
01-Jul-92	183	1079	990	8.0	8.0	A	0.229
02-Jul-92	184	1105	996	7.0	9.0	C	0.445
06-Jul-92	188	1129	150	7.0	9.0	A	0.318
07-Jul-92	189	1143	162	8.0	8.0	A	0.698
08-Jul-92	190	1152	993	8.0	9.0	D	0.316
09-Jul-92	191	1176	91	8.0	8.0	B	0.333
10-Jul-92	192	1191	137	12.0	13.0	A	0.725
10-Jul-92	192	1201	775	12.0	13.0	C	0.720
10-Jul-92	192	1201	775	12.0	13.0	C	0.630
13-Jul-92	195	1210	998	8.0	8.0	D	0.245
14-Jul-92	196	1231	994	8.0	8.0	A	0.437
15-Jul-92	197	1249	999	8.0	8.0	D	0.334
16-Jul-92	198	1290	995	10.0	8.0	A	0.332
17-Jul-92	199	1298	991	9.0	8.0	D	0.584
20-Jul-92	202	1325	778	10.0	9.0	D	0.219
22-Jul-92	204	1368	844	14.0	13.0	C	0.756
22-Jul-92	204	1369	882	14.0	12.0	C	0.634
23-Jul-92	205	1399	921	10.0	8.0	D	0.362
24-Jul-92	206	1457	995	10.0	8.0	D	0.165
27-Jul-92	209	1451	911	14.0	12.0	C	0.495
27-Jul-92	209	1452	867	14.0	13.0	A	0.552
28-Jul-92	210	1484	998	10.0	8.0	C	0.580
29-Jul-92	211	1492	927	12.0	10.0	A	0.755
30-Jul-92	212	1507	153	11.0	9.0	C	0.255
31-Jul-92	213	1570	994	10.0	8.0	A	0.449

TABLE C-7. SUMMARY OF THE 1992 NMOC DATA FOR SALT LAKE CITY, UTAH (S3UT)

Sample Period: 6:00 a.m. to 9:00 a.m.

Date Sampled	Julian Date Sampled	Sample ID Number	Sample Canister Number	Sample Pressure (psig)	Analysis Pressure (psig)	Radian Channel	Mean NMOC ppmC
03-Aug-92	216	1624	992	10.0	8.0	D	1.020
04-Aug-92	217	1627	995	10.0	8.0	B	0.548
05-Aug-92	218	1651	998	10.0	10.0	A	0.457
06-Aug-92	219	1715	60	14.0	15.0	C	0.234
06-Aug-92	219	1716	788	14.0	15.0	B	0.298
10-Aug-92	223	1740	994	10.0	10.0	D	0.323
11-Aug-92	224	1751	303	11.0	10.0	D	0.427
12-Aug-92	225	1780	996	14.0	14.0	C	0.326
12-Aug-92	225	1781	35	14.0	13.0	D	0.271
12-Aug-92	225	1781	35	14.0	13.0	D	0.274
13-Aug-92	226	1817	730	10.0	10.0	D	0.761
14-Aug-92	227	1842	993	11.0	9.0	D	0.758
14-Aug-92	227	1843	74	10.0	8.0	C	0.464
17-Aug-92	230	1859	997	10.0	8.0	D	0.195
18-Aug-92	231	1886	995	15.0	14.0	B	0.625
18-Aug-92	231	1886	995	15.0	15.0	B	0.624
18-Aug-92	231	1887	872	15.0	14.0	A	0.664
20-Aug-92	233	1945	690	11.0	10.0	D	0.492
25-Aug-92	238	2047	997	10.0	10.0	B	0.682
26-Aug-92	239	2067	996	9.0	5.0	B	0.404
27-Aug-92	240	2093	995	10.0	9.0	C	0.758
28-Aug-92	241	2103	51	10.0	8.0	A	0.614
31-Aug-92	244	2144	993	8.0	8.0	C	0.388
01-Sep-92	245	2158	997	10.0	10.0	B	0.511
02-Sep-92	246	2210	990	10.0	10.0	A	0.305
03-Sep-92	247	2216	995	10.0	10.0	D	0.639
04-Sep-92	248	2244	98	10.0	10.0	A	0.315
08-Sep-92	252	2256	993	10.0	12.0	C	0.589
09-Sep-92	253	2287	997	10.0	10.0	A	0.265
10-Sep-92	254	2305	999	10.0	10.0	B	0.403
11-Sep-92	255	2319	992	10.0	9.5	C	0.814

TABLE C-7. SUMMARY OF THE 1992 NMOC DATA FOR SALT LAKE CITY, UTAH (S3UT)

Sample Period: 6:00 a.m. to 9:00 a.m.

Date Sampled	Julian Date Sampled	Sample ID Number	Sample Canister Number	Sample Pressure (psig)	Analysis Pressure (psig)	Radian Channel	Mean NMOC ppmC
14-Sep-92	258	2343	994	10.0	9.0	C	0.413
15-Sep-92	259	2362	883	10.0	9.5	C	0.314
16-Sep-92	260	2371	990	10.0	12.0	A	0.499
17-Sep-92	261	2407	716	15.0	14.0	D	0.494
17-Sep-92	261	2409	189	15.0	14.0	D	0.480
18-Sep-92	262	2418	8	10.0	9.0	C	0.362
22-Sep-92	266	2463	990	14.0	12.0	C	1.060
22-Sep-92	266	2464	992	14.0	12.0	A	1.030
23-Sep-92	267	2483	997	10.0	10.0	D	0.822
24-Sep-92	268	2512	906	10.0	6.0	D	0.114
25-Sep-92	269	2527	685	16.5	12.0	A	0.283
25-Sep-92	269	2528	627	16.5	12.0	B	0.130
28-Sep-92	272	2568	660	11.0	11.0	B	0.736
30-Sep-92	274	2591	904	10.0	10.0	C	1.090

Winston Salem, NC (WSNC)

1992 NMOC Program (AIRS # 37-067-0022)

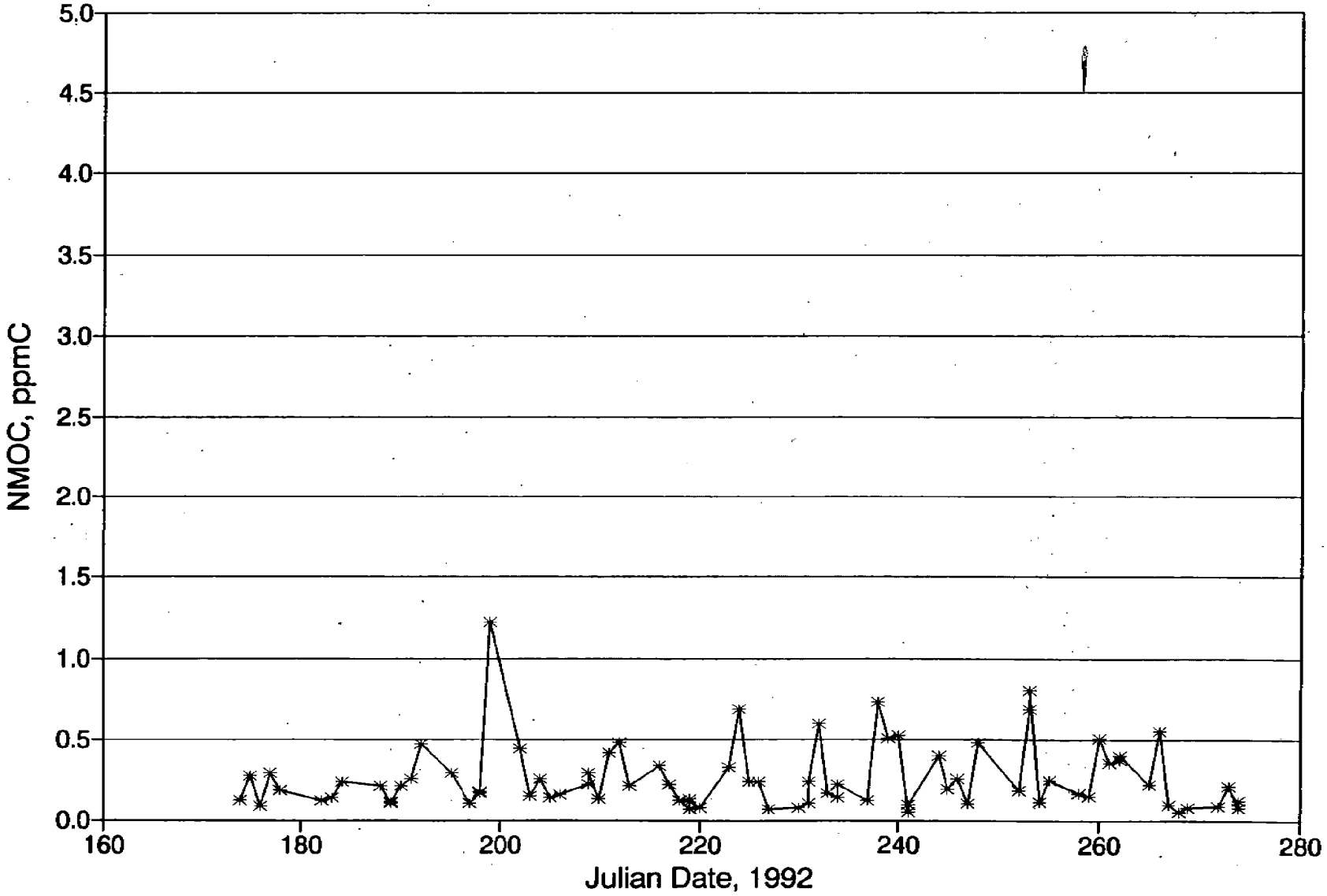

TABLE C-8. SUMMARY OF THE 1992 NMOC DATA FOR WINSTON SALEM, NC (WSNC)

Sample Period: 6:00 a.m. to 9:00 a.m.

Date Sampled	Julian Date Sampled	Sample ID Number	Sample Canister Number	Sample Pressure (psig)	Analysis Pressure (psig)	Radian Channel	Mean NMOC ppmC
22-Jun-92	174	1004	632	11.5	12.0	A	0.121
23-Jun-92	175	1011	674	11.5	10.0	C	0.277
24-Jun-92	176	1022	673	11.0	10.0	C	0.089
25-Jun-92	177	1034	788	14.0	14.0	D	0.289
26-Jun-92	178	1036	794	13.0	12.0	D	0.184
30-Jun-92	182	1075	135	11.0	9.0	C	0.125
01-Jul-92	183	1073	115	13.0	11.0	D	0.142
02-Jul-92	184	1112	49	13.0	12.0	D	0.237
06-Jul-92	188	1124	41	14.0	12.0	C	0.208
07-Jul-92	189	1132	833	24.0	22.0	B	0.106
07-Jul-92	189	1133	726	24.0	22.0	C	0.115
07-Jul-92	189	1133	726	24.0	22.0	C	0.115
08-Jul-92	190	1145	146	12.0	11.0	A	0.216
09-Jul-92	191	1185	191	12.0	10.5	B	0.260
10-Jul-92	192	1197	651	13.0	12.0	C	0.474
13-Jul-92	195	1209	626	13.0	11.0	A	0.292
15-Jul-92	197	1263	828	12.0	10.0	D	0.106
16-Jul-92	198	1287	131	13.0	12.0	D	0.165
16-Jul-92	198	1291	193	13.0	12.0	A	0.179
17-Jul-92	199	1295	901	13.0	11.5	C	1.220
20-Jul-92	202	1316	409	13.0	12.0	C	0.444
21-Jul-92	203	1349	692	13.0	11.0	D	0.146
22-Jul-92	204	1374	914	13.0	12.0	D	0.260
23-Jul-92	205	1407	870	13.0	12.0	D	0.143
24-Jul-92	206	1425	878	13.0	12.0	B	0.156
27-Jul-92	209	1447	708	13.0	12.0	C	0.219
27-Jul-92	209	1448	730	13.0	12.0	C	0.297
28-Jul-92	210	1480	901	12.0	10.0	D	0.134
29-Jul-92	211	1491	859	12.0	10.0	C	0.421
30-Jul-92	212	1516	821	13.0	10.0	B	0.483
31-Jul-92	213	1565	894	12.0	10.0	C	0.208
03-Aug-92	216	1587	767	11.0	10.0	C	0.339

TABLE C-8. SUMMARY OF THE 1992 NMOC DATA FOR WINSTON SALEM, NC (WSNC)

Sample Period: 6:00 a.m. to 9:00 a.m.

Date Sampled	Julian Date Sampled	Sample ID Number	Sample Canister Number	Sample Pressure (psig)	Analysis Pressure (psig)	Radian Channel	Mean NMOC ppmC
04-Aug-92	217	1616	35	12.0	10.0	C	0.224
05-Aug-92	218	1643	77	12.0	12.0	C	0.118
06-Aug-92	219	1670	112	13.0	13.0	D	0.064
06-Aug-92	219	1670	112	13.0	13.0	D	0.109
06-Aug-92	219	1676	828	13.0	12.0	A	0.128
07-Aug-92	220	1705	662	13.0	13.0	D	0.076
10-Aug-92	223	1739	166	13.0	13.0	C	0.325
11-Aug-92	224	1757	633	18.0	12.0	A	0.687
12-Aug-92	225	1790	642	13.0	12.0	A	0.243
13-Aug-92	226	1824	150	12.0	10.0	A	0.238
14-Aug-92	227	1827	638	13.0	11.0	C	0.072
17-Aug-92	230	1867	112	13.0	12.0	C	0.081
18-Aug-92	231	1881	707	20.0	20.0	D	0.106
18-Aug-92	231	1882	189	20.0	20.0	A	0.240
19-Aug-92	232	1921	97	8.0	6.0	C	0.596
20-Aug-92	233	1949	80	8.0	7.0	D	0.168
21-Aug-92	234	1974	114	12.0	11.0	D	0.137
21-Aug-92	234	1974	114	12.0	11.0	D	0.222
24-Aug-92	237	1999	640	12.0	10.0	D	0.118
25-Aug-92	238	2038	783	12.0	12.0	A	0.737
26-Aug-92	239	2066	781	12.0	10.0	D	0.511
27-Aug-92	240	2098	97	11.0	9.0	D	0.532
28-Aug-92	241	2109	716	14.0	12.0	C	0.047
28-Aug-92	241	2110	823	14.0	12.0	D	0.095
31-Aug-92	244	2130	148	11.0	8.0	D	0.405
01-Sep-92	245	2165	762	8.0	8.0	C	0.192
02-Sep-92	246	2188	667	12.0	12.0	C	0.253
03-Sep-92	247	2221	723	13.0	12.0	C	0.102
04-Sep-92	248	2231	992	11.0	10.0	C	0.480
08-Sep-92	252	2260	908	14.0	14.0	D	0.181
09-Sep-92	253	2268	154	17.0	19.0	D	0.687
09-Sep-92	253	2276	837	17.0	16.0	B	0.811

TABLE C-8. SUMMARY OF THE 1992 NMOC DATA FOR WINSTON SALEM, NC (WSNC)

Sample Period: 6:00 a.m. to 9:00 a.m.

Date Sampled	Julian Date Sampled	Sample ID Number	Sample Canister Number	Sample Pressure (psig)	Analysis Pressure (psig)	Radian Channel	Mean NMOC ppmC
10-Sep-92	254	2308	674	11.0	11.0	C	0.116
11-Sep-92	255	2329	915	8.0	8.0	A	0.251
14-Sep-92	258	2345	723	11.0	10.0	A	0.171
15-Sep-92	259	2352	583	13.0	12.0	A	0.152
16-Sep-92	260	2394	993	11.0	10.0	D	0.514
17-Sep-92	261	2413	605	11.0	10.0	B	0.361
18-Sep-92	262	2427	657	18.0	17.0	C	0.377
18-Sep-92	262	2430	651	18.0	17.0	A	0.406
21-Sep-92	265	2442	627	10.0	10.0	B	0.218
22-Sep-92	266	2468	806	10.0	7.0	C	0.559
23-Sep-92	267	2482	821	11.0	10.0	A	0.094
24-Sep-92	268	2520	183	10.0	8.0	C	0.048
25-Sep-92	269	2523	587	11.0	7.0	A	0.079
28-Sep-92	272	2558	911	10.0	10.0	D	0.083
29-Sep-92	273	2572	798	10.0	10.0	D	0.214
30-Sep-92	274	2604	995	10.0	10.0	B	0.077
30-Sep-92	274	2605	829	10.0	10.0	A	0.126

APPENDIX D

1992 NMOC MONITORING PROGRAM INVALIDATED AND MISSING SAMPLES

APPENDIX D

TABLE 1

1992 NMOC PROGRAM

VOID OR INVALIDATED SAMPLES BY DATE

#	Site	Date	Description	Assigned
1	S2UT	06/22/92	NO PRESSURE	EQUIPMENT
2	S2UT	06/23/92	LOW ORIFICE FLOW	EQUIPMENT
3	NWNJ	06/23/92	LOW CANISTER PRESSURE	EQUIPMENT
4	S2UT	06/29/92	LOW CANISTER PRESSURE	EQUIPMENT
5	NWNJ	06/29/92	LOW CANISTER PRESSURE	EQUIPMENT
6	WSNC	06/29/92	POWER FAILURE	EQUIPMENT
7	S3UT	06/30/92	POWER FAILURE	EQUIPMENT
8	S2UT	06/30/92	LOW CANISTER PRESSURE	EQUIPMENT
9	PLNJ	06/30/92	NO PRESSURE	EQUIPMENT
10	S2UT	07/06/92	POWER FAILURE	EQUIPMENT
11	MNY	07/06/92	NO PRESSURE	EQUIPMENT
12	MNY	07/07/92	UNKNOWN	UNKNOWN
13	S2UT	07/09/92	TIMER MALFUNCTION	EQUIPMENT
14	S2UT	07/10/92	TIMER MALFUNCTION (DUPLICATE)	EQUIPMENT
15	MNY	07/10/92	NO PRESSURE	EQUIPMENT
16	NWNJ	07/10/92	NO PRESSURE	EQUIPMENT
17	NWNJ	07/13/92	SYSTEM LEAK	EQUIPMENT
18	WSNC	07/14/92	LOW CANISTER PRESSURE	EQUIPMENT
19	NWNJ	07/15/92	LOW CANISTER PRESSURE	EQUIPMENT
20	NWNJ	07/16/92	UNKNOWN	UNKNOWN
21	MNY	07/16/92	UNKNOWN	UNKNOWN
22	NWNJ	07/17/92	UNKNOWN	UNKNOWN
23	NWNJ	07/20/92	UNKNOWN	UNKNOWN
24	S2UT	07/21/92	SAMPLER SET ON MANUAL	OPERATOR
25	S3UT	07/21/92	SAMPLER SET ON MANUAL	OPERATOR
26	MNY	07/20/92	SAMPLER SET ON MANUAL	OPERATOR
27	S2UT	07/23/92	SYSTEM LEAK	EQUIPMENT
28	MNY	07/23/92	NO PRESSURE (DUPLICATE)	EQUIPMENT
29	S2UT	08/05/92	SYSTEM LEAK	EQUIPMENT
30	S2UT	07/28/92	TIMER MALFUNCTION	EQUIPMENT
31	R1NC	07/23/92	POWER FAILURE	EQUIPMENT
32	S2UT	07/30/92	SAMPLER SET ON MANUAL	OPERATOR
33	S3UT	08/07/92	INLET NOT ATTACHED	OPERATOR
34	PLNJ	08/12/92	TIMER MALFUNCTION	EQUIPMENT

APPENDIX D

TABLE 1

1992 NMOC PROGRAM

VOID OR INVALIDATED SAMPLES BY DATE

#	Site	Date	Description	Assigned
35	MNY	08/13/92	UNKNOWN	UNKNOWN
36	MNY	08/19/92	SAMPLER SET ON MANUAL	OPERATOR
37	NWNJ	08/18/92	CAN RECEIVED UNDER VACUUM	UNKNOWN
38	S3UT	08/19/92	POWER FAILURE	EQUIPMENT
39	S3UT	08/21/92	NO PRESSURE	EQUIPMENT
40	S3UT	08/24/92	POWER FAILURE	EQUIPMENT
41	MNY	08/25/92	SAMPLER SET ON MANUAL (DUPLICATE)	OPERATOR
42	R1NC	08/28/92	SAMPLER RAN 9 HOURS	OPERATOR
43	R1NC	08/31/92	SAMPLER RAN 9 HOURS	OPERATOR
44	R1NC	09/01/92	SAMPLER RAN 9 HOURS	OPERATOR
45	MNY	09/04/92	UNKNOWN	UNKNOWN
46	MNY	09/08/92	UNKNOWN	UNKNOWN
47	R1NC	09/08/92	TIMER MALFUNCTION (DUPLICATE)	EQUIPMENT
48	MNY	09/10/92	NO PRESSURE	EQUIPMENT
49	S2UT	09/11/92	VALVE LEFT CLOSED	OPERATOR
50	NWNJ	09/18/92	NEW SAMPLER PROBLEMS	EQUIPMENT
51	NWNJ	09/17/92	NO PRESSURE	EQUIPMENT
52	NWNJ	09/21/92	UNKNOWN	UNKNOWN
53	S3UT	09/21/92	VALVE LEFT CLOSED	OPERATOR
54	NWNJ	09/25/92	UNKNOWN	UNKNOWN
55	NWNJ	09/28/92	NO PRESSURE	EQUIPMENT
56	NWNJ	09/24/92	MOTOR FAILED	EQUIPMENT
57	S2UT	09/28/92	UNKNOWN	UNKNOWN
58	S3UT	09/29/92	UNKNOWN	UNKNOWN
59	MNY	09/29/92	UNKNOWN	UNKNOWN
60	MNY	09/30/92	UNKNOWN	UNKNOWN
61	NWNJ	09/30/92	NO PRESSURE	EQUIPMENT
62	LINY	09/14/92	NO PRESSURE	EQUIPMENT

APPENDIX D

TABLE 2

1992 SPECIATED NMOC PROGRAM

VOID OR INVALIDATED SAMPLES BY DATE

#	Site	Date	Description	Assigned
1	CHNC	06/23/92	NO PRESSURE	EQUIPMENT
2	BRLA	06/22/92	SAMPLER RAN 31 HOURS	EQUIPMENT
3	BRLA	06/23/92	NO PRESSURE	EQUIPMENT
4	CHNC	06/24/92	NO PRESSURE	EQUIPMENT
5	BRLA	06/24/92	FINAL PRESSURE 28	EQUIPMENT
6	EPTX	06/25/92	TIMER MALFUNCTION	EQUIPMENT
7	FWTX	06/29/92	POWER FAILURE	EQUIPMENT
8	FWTX	07/01/92	TIMER MALFUNCTION	EQUIPMENT
9	BRLA	07/06/92	PUMP PROBLEMS	EQUIPMENT
10	B3AL	07/06/92	LOW CANISTER PRESSURE	EQUIPMENT
11	MIFL	07/02/92	SAMPLER RAN 7.5 HOURS	EQUIPMENT
12	JUMX	07/08/92	SAMPLER DID NOT RUN (DUPLICATE)	EQUIPMENT
13	DLTX	07/09/92	USED WRONG ORIFICE (DUPLICATE)	OPERATOR
14	BRLA	07/09/92	SAMPLER PROBLEMS	EQUIPMENT
15	BRLA	07/17/92	TEST CANISTER FOR NEW SAMPLER	EQUIPMENT
16	B2AL	07/17/92	NO PRESSURE	EQUIPMENT
17	B3AL	07/17/92	TIMER MALFUNCTION	EQUIPMENT
18	BRLA	07/18/92	SAMPLE LINE BLOCKED	EQUIPMENT
19	JUMX	07/27/92	CAN RECEIVED UNDER VACUUM	EQUIPMENT
20	B1AL	07/24/92	SAMPLER RAN 55 HOURS	EQUIPMENT
21	CHNC	07/29/92	FINAL PRESSURE 34.5 (DUPLICATE)	EQUIPMENT
22	CHNC	07/31/92	CANISTER VALVE LEFT CLOSED	OPERATOR
23	JUMX	07/31/92	NO PRESSURE	EQUIPMENT
24	JUMX	08/03/92	CAN RECV'D UNDER VACUUM (DUPLICATE)	EQUIPMENT
25	B3AL	08/03/92	LOW CANISTER PRESSURE	EQUIPMENT
26	CHNC	08/04/92	FINAL PRESSURE 38	EQUIPMENT
27	CHNC	08/06/92	FINAL PRESSURE 40	EQUIPMENT
28	CHNC	07/23/92	FINAL PRESSURE 30.5 ORIFICE LEAK	EQUIPMENT
29	CHNC	07/24/92	FINAL PRESSURE 37 SAMPLE LINE BROKE	EQUIPMENT
30	CHNC	07/27/92	NO PRESSURE	EQUIPMENT
31	CHNC	07/28/92	NO PRESSURE ORIFICE BLOCKED	EQUIPMENT
32	B3AL	08/04/92	SAMPLER RAN 7.2 HOURS	EQUIPMENT
33	B1AL	08/07/92	CANISTERS LEFT CLOSED (DUPLICATE)	OPERATOR
34	CHNC	08/10/92	FINAL PRESSURE 32	EQUIPMENT
35	CHNC	08/12/92	FINAL PRESSURE 32	EQUIPMENT

APPENDIX D

TABLE 2

1992 SPECIATED NMOC PROGRAM

VOID OR INVALIDATED SAMPLES BY DATE

#	Site	Date	Description	Assigned
36	JUMX	08/12/92	NO PRESSURE	EQUIPMENT
37	CHNC	08/13/92	FINAL PRESSURE 32	EQUIPMENT
38	CHNC	08/18/92	CANISTER VALVE WOULDN'T OPEN	EQUIPMENT
39	BMTX	08/24/92	LEAK IN SWAGELOK (DUPLICATE)	EQUIPMENT
40	FWTX	08/27/92	STATE HOLIDAY	HOLIDAY
41	CHNC	08/26/92	NO PRESSURE	EQUIPMENT
42	BRLA	08/26/92	SAMPLER RAN 8.3 HOURS	EQUIPMENT
43	BMTX	08/28/92	TIMER MALFUNCTION	EQUIPMENT
44	CHNC	08/31/92	NO PRESSURE	EQUIPMENT
45	MIFL		POWER SHUT OFF-HURRICANE	EQUIPMENT
46	B1AL	09/02/92	NO PRESSURE	EQUIPMENT
47	B3AL	09/04/92	POWER FAILURE	EQUIPMENT
48	JUMX	09/09/92	NO PRESSURE	EQUIPMENT
49	B3AL	09/18/92	SAMPLER RAN 6 HOURS	EQUIPMENT
50	JUMX	09/21/92	NO PRESSURE	EQUIPMENT
51	CHNC	09/18/92	FINAL PRESSURE 34.5 (DUPLICATE)	EQUIPMENT
52	BRLA	09/14/92	NO PRESSURE	EQUIPMENT

APPENDIX E

PDFID INTEGRATOR PROGRAMMING INSTRUCTIONS

INTEGRATOR PROGRAMMING INSTRUCTIONS

Instructions for programming the integrators are as follows. Be sure to press **ENTER** after each key sequence.

Control Integrator

Oven Temp 90
Oven Temp Limit 405
Oven Temp ON
Oven Temp OFF
List Oven Temp
(A listing should say OvenTemp X°C Setpt 90°C Limit 405°C)
Oven Temp Initial Time 0.20
Oven Temp Initial Value 90
Oven Temp Pgrm Rate 30.00
Oven Temp Final Value 90.00
Oven Temp Final Time 4.00
Oven Temp Equil Time 1.00

Detector A ON
Signal A
Chart speed 4.00
%Offset 10
Zero
Attn 2^ 4

Run Time Annotation ON
Run Table Annotation ON
Clock Table Annotation OFF
Program Annotation OFF
Oven Temp Annotation OFF
Report Annotation OFF

Slave Integrator

Detector B ON
Signal B
Chart speed 4.00
%Offset 10
Zero
Attn 2^ 4

Run Time Annotation ON
Run Table Annotation ON
Clock Table Annotation OFF
Program Annotation OFF
Oven Temp Annotation OFF
(should say ***Warning***Oven Temp now owned by Chnl 2)
Report Annotation OFF

Control Integrator

Oven Temp Annotation OFF
(should say ***Warning***Oven Temp now owned by Chnl 1)
Run Time 0.01 Intg OFF
Run Time 0.01 Valve 5 ON
Run Time 0.01 Page
Run Time 0.02 List Attn2^
Run Time 0.04 Oven Temp ON
Run Time 0.20 Valve 2 ON
Run Time 0.21 Valve 2 OFF
Run Time 0.22 Intg ON
Run Time 0.23 Set BL
Run Time 0.23 List Intg
Rum Time 1.87 Set BL
Run Time 1.88 Intg OFF
Run Time 1.89 List Intg
Run Time 1.90 Chart Spped 1.5
Run Time 3.44 Valve 2 ON
Run Time 3.45 Valve 2 OFF
Run Time 3.46 Valve 2 ON
Run Time 3.47 Valve 2 OFF
Run Time 3.48 Valve 2 ON
Run Time 3.49 Valve 2 OFF
Run Time 3.50 STOP

Slave Integrator

Run Time 0.01 Intg OFF
Run Time 0.01 Page
Run Time 0.02 List Attn2^
Run Time 0.22 Intg ON
Run Time 0.23 Set BL
Run Time 0.23 List Intg
Rum Time 1.87 Set BL
Run Time 1.88 Intg OFF
Run Time 1.89 List Intg
Run Time 1.90 Chart Spped 1.5
Run Time 3.50 STOP

Control Integrator

Det 1 Temp 250
Det 1 Temp Limit 405
Inj 1 Temp 31
Inj 1 Temp Limit 405
Aux 1 Temp 90
Aux 1 Temp Limit 405
Flow A 30
Flow A Limit 500

INTEGRATOR PROGRAMMING INSTRUCTIONS (Continued)

Slave Integrator

Flow B 30
Flow B Limit 500

Control Integrator

Valve 1 OFF
Valve 2 OFF
Valve 3 OFF
Valve 4 OFF
Valve 5 ON
Valve 6 OFF
Valve 7 OFF
Valve 8 OFF
Valve 9 OFF
Valve 10 OFF
Valve 11 OFF
Valve 12 OFF

Threshold 1
Peak Width 0.04

Slave Integrator

Threshold 1
Peak Width 0.04

Control Integrator

20 Valve 5 OFF
25 List Valve 5
30 Oven Temp Initial Value 30
35 Oven Temp OFF
40 Wait 2
60 Start
70 Oven Temp 90
80 Vale 5 ON

Sync ON

APPENDIX F

1992 NMOC DAILY CALIBRATION DATA

Table F-1. Daily Calibration Data Summary (Channel A)

Cal Date	Julian Cal Date	Initial Zero A.C.	Final Zero A.C.	Initial Zero ppmC	Final Zero ppmC	Initial Cal Factor	Final Cal Factor	Cal Factor Drift	Cal Factor % Drift
06/02/92	154	1.01	1.01	0.000281	0.000281	0.000279	0.000279	0.000000	0.000000
06/03/92	155	1.38	1.38	0.000386	0.000386	0.000281	0.000281	0.000000	0.000000
06/04/92	156	0.95	0.95	0.000266	0.000266	0.000280	0.000280	0.000000	0.000000
06/05/92	157	1.25	1.25	0.000347	0.000347	0.000277	0.000277	0.000000	0.000000
06/08/92	160	2.09	2.09	0.000586	0.000586	0.000281	0.000281	0.000000	0.000000
06/09/92	161	1.04	1.04	0.000288	0.000288	0.000277	0.000277	0.000000	0.000000
06/10/92	162	2.70	2.70	0.000736	0.000736	0.000273	0.000273	0.000000	0.000000
06/11/92	163	1.86	1.86	0.000517	0.000517	0.000278	0.000278	0.000000	0.000000
06/12/92	164	0.20	0.20	0.000055	0.000055	0.000277	0.000277	0.000000	0.000000
06/15/92	167	0.61	0.61	0.000170	0.000170	0.000279	0.000279	0.000000	0.000000
06/16/92	168	0.63	0.63	0.000177	0.000177	0.000284	0.000284	0.000000	0.000000
06/17/92	169	0.12	0.12	0.000034	0.000034	0.000287	0.000287	0.000000	0.000000
06/18/92	170	1.10	1.10	0.000307	0.000307	0.000281	0.000281	0.000000	0.000000
06/19/92	171	0.51	0.51	0.000145	0.000145	0.000283	0.000283	0.000000	0.000000
06/22/92	174	0.13	0.13	0.000037	0.000037	0.000281	0.000281	0.000000	0.000000
06/23/92	175	0.29	0.29	0.000080	0.000080	0.000279	0.000279	0.000000	0.000000
06/24/92	176	0.72	0.72	0.000199	0.000199	0.000276	0.000276	0.000000	0.000000
06/25/92	177	1.08	1.08	0.000298	0.000298	0.000277	0.000277	0.000000	0.000000
06/26/92	178	1.93	1.93	0.000532	0.000532	0.000275	0.000275	0.000000	0.000000
06/29/92	181	4.75	4.75	0.001317	0.001317	0.000277	0.000277	0.000000	0.000000
06/30/92	182	4.53	4.53	0.001231	0.001231	0.000272	0.000272	0.000000	0.000000
07/01/92	183	0.33	0.33	0.000089	0.000089	0.000274	0.000274	0.000000	0.000000
07/02/92	184	2.96	2.96	0.000799	0.000799	0.000270	0.000270	0.000000	0.000000
07/06/92	188	0.38	0.38	0.000101	0.000101	0.000266	0.000266	0.000000	0.000000
07/07/92	189	3.32	3.32	0.000897	0.000897	0.000271	0.000271	0.000000	0.000000
07/08/92	190	1.60	1.60	0.000429	0.000429	0.000269	0.000269	0.000000	0.000000
07/09/92	191	6.24	6.24	0.001694	0.001694	0.000272	0.000272	0.000000	0.000000
07/10/92	192	0.55	0.55	0.000147	0.000147	0.000267	0.000267	0.000000	0.000000
07/13/92	195	1.71	1.71	0.000461	0.000461	0.000269	0.000269	0.000000	0.000000

Table F-1. Daily Calibration Data Summary (Channel A)

Cal Date	Julian Cal Date	Initial Zero A.C.	Final Zero A.C.	Initial Zero ppmC	Final Zero ppmC	Initial Cal Factor	Final Cal Factor	Cal Factor Drift	Cal Factor % Drift
07/14/92	196	3.57	3.57	0.000957	0.000957	0.000268	0.000268	0.000000	0.000000
07/15/92	197	7.93	7.93	0.002138	0.002138	0.000270	0.000270	0.000000	0.000000
07/16/92	198	5.01	5.01	0.001336	0.001339	0.000267	0.000267	-0.000000	-0.163925
07/17/92	199	4.32	4.24	0.001166	0.001156	0.000270	0.000273	-0.000002	-0.885095
07/20/92	202	4.25	6.66	0.001173	0.001798	0.000276	0.000270	0.000006	2.169175
07/21/92	203	4.94	4.94	0.001337	0.001337	0.000271	0.000271	0.000000	0.000000
07/22/92	204	5.77	8.86	0.001568	0.002412	0.000272	0.000272	-0.000001	-0.249745
07/27/92	209	9.42	9.42	0.002568	0.002568	0.000273	0.000273	0.000000	0.000000
07/29/92	211	8.19	8.19	0.002210	0.002210	0.000270	0.000270	0.000000	0.000000
07/30/92	212	6.09	6.09	0.001642	0.001642	0.000270	0.000270	0.000000	0.000000
07/31/92	213	3.48	3.48	0.000720	0.000720	0.000207	0.000207	0.000000	0.000000
08/03/92	216	5.39	8.04	0.001129	0.001694	0.000210	0.000211	-0.000001	-0.505649
08/04/92	217	7.42	3.04	0.001535	0.000626	0.000207	0.000206	0.000001	0.489856
08/05/92	218	8.85	8.85	0.001813	0.001813	0.000205	0.000205	0.000000	0.000000
08/06/92	219	4.06	3.40	0.000838	0.000712	0.000207	0.000209	-0.000003	-1.
08/07/92	220	5.89	2.96	0.001222	0.000617	0.000207	0.000209	-0.000001	-0.7
08/10/92	223	6.98	6.98	0.001443	0.001443	0.000207	0.000207	0.000000	0.000000
08/11/92	224	4.48	4.80	0.000912	0.001005	0.000203	0.000210	-0.000006	-2.979884
08/12/92	225	5.22	1.83	0.001076	0.000375	0.000206	0.000206	0.000000	0.223781
08/13/92	226	3.41	2.94	0.000703	0.000612	0.000206	0.000208	-0.000002	-0.957101
08/14/92	227	5.50	5.71	0.001123	0.001169	0.000204	0.000205	-0.000000	-0.176426
08/17/92	230	4.69	4.69	0.000964	0.000964	0.000206	0.000206	0.000000	0.000000
08/18/92	231	8.98	8.98	0.001871	0.001871	0.000208	0.000208	0.000000	0.000000
08/19/92	232	10.32	3.93	0.002128	0.000823	0.000206	0.000209	-0.000003	-1.518370
08/20/92	233	5.92	10.96	0.001231	0.002266	0.000208	0.000207	0.000001	0.564139
08/21/92	234	5.15	4.71	0.001071	0.000980	0.000208	0.000208	0.000000	0.020805
08/24/92	237	7.58	7.58	0.001580	0.001580	0.000209	0.000209	0.000000	0.000000
08/25/92	238	3.22	3.22	0.000876	0.000876	0.000273	0.000273	0.000000	0.000000
08/26/92	239	3.75	6.02	0.001020	0.001649	0.000272	0.000274	-0.000002	-0.693046

Table F-1. Daily Calibration Data Summary (Channel A)

Cal Date	Julian Cal Date	Initial Zero A.C.	Final Zero A.C.	Initial Zero ppmC	Final Zero ppmC	Initial Cal Factor	Final Cal Factor	Cal Factor Drift	Cal Factor % Drift
08/27/92	240	6.61	3.77	0.001797	0.001026	0.000272	0.000272	0.000000	0.020847
08/28/92	241	2.63	3.25	0.000708	0.000887	0.000270	0.000273	-0.000003	-1.249880
08/31/92	244	3.79	3.79	0.001036	0.001036	0.000274	0.000274	0.000000	0.000000
09/01/92	245	6.97	7.26	0.001908	0.001979	0.000274	0.000273	0.000001	0.342782
09/03/92	247	5.06	5.37	0.001396	0.001465	0.000276	0.000273	0.000003	1.237172
09/04/92	248	8.83	3.26	0.002429	0.000907	0.000275	0.000279	-0.000003	-1.252184
09/09/92	253	5.94	7.58	0.001633	0.002096	0.000275	0.000277	-0.000001	-0.514592
09/10/92	254	3.29	9.21	0.000898	0.002543	0.000273	0.000276	-0.000003	-1.039826
09/11/92	255	7.10	10.81	0.001948	0.003057	0.000274	0.000283	-0.000009	-3.119459
09/14/92	258	3.52	10.61	0.000966	0.002926	0.000275	0.000276	-0.000001	-0.301891
09/15/92	259	4.89	2.35	0.001346	0.000652	0.000275	0.000277	-0.000002	-0.664953
09/16/92	260	6.04	6.04	0.001670	0.001670	0.000277	0.000277	0.000000	0.000000
09/17/92	261	7.48	7.48	0.002012	0.002012	0.000269	0.000269	0.000000	0.000000
09/18/92	262	5.01	5.16	0.001366	0.001418	0.000273	0.000275	-0.000002	-0.665337
09/21/92	265	3.39	9.02	0.000936	0.002471	0.000276	0.000274	0.000002	0.754868
09/22/92	266	5.12	5.12	0.001408	0.001408	0.000275	0.000275	0.000000	0.000000
09/23/92	267	7.30	7.06	0.002020	0.001961	0.000277	0.000278	-0.000001	-0.373181
09/24/92	268	4.28	8.83	0.001171	0.002460	0.000274	0.000279	-0.000005	-1.800275
09/25/92	269	5.72	3.48	0.001576	0.000963	0.000276	0.000277	-0.000002	-0.551584
09/28/92	272	4.13	4.13	0.001153	0.001153	0.000279	0.000279	0.000000	0.000000
09/29/92	273	35.49	35.49	0.009770	0.009770	0.000275	0.000275	0.000000	0.000000
09/30/92	274	30.21	30.21	0.008300	0.008300	0.000275	0.000275	0.000000	0.000000
10/02/92	276	8.16	3.46	0.002228	0.000944	0.000273	0.000273	-0.000000	-0.069122
10/06/92	280	8.88	2.71	0.002434	0.000745	0.000274	0.000275	-0.000001	-0.493879
10/07/92	281	6.71	6.71	0.001831	0.001831	0.000273	0.000273	0.000000	0.000000
10/08/92	282	6.71	6.71	0.001837	0.001837	0.000274	0.000274	0.000000	0.000000
10/13/92	287	3.17	3.17	0.000863	0.000863	0.000273	0.000273	0.000000	0.000000

Table F-2. Daily Calibration Data Summary (Channel B)

Cal Date	Julian Cal Date	Initial Zero A.C.	Final Zero A.C.	Initial Zero ppmC	Final Zero ppmC	Initial Cal Factor	Final Cal Factor	Cal Factor Drift	Cal Factor % Drift
06/02/92	154	4.33	4.33	0.001204	0.001204	0.000278	0.000278	0.000000	0.000000
06/03/92	155	3.67	3.67	0.001015	0.001015	0.000277	0.000277	0.000000	0.000000
06/04/92	156	0.98	0.98	0.000273	0.000273	0.000278	0.000278	0.000000	0.000000
06/05/92	157	1.32	1.32	0.000364	0.000364	0.000277	0.000277	0.000000	0.000000
06/08/92	160	1.18	1.18	0.000335	0.000335	0.000284	0.000284	0.000000	0.000000
06/09/92	161	7.07	7.07	0.001976	0.001976	0.000280	0.000280	0.000000	0.000000
06/10/92	162	4.29	4.29	0.001197	0.001197	0.000279	0.000279	0.000000	0.000000
06/11/92	163	3.24	3.24	0.000906	0.000906	0.000280	0.000280	0.000000	0.000000
06/12/92	164	6.73	6.73	0.001852	0.001852	0.000275	0.000275	0.000000	0.000000
06/15/92	167	4.20	4.20	0.001172	0.001172	0.000279	0.000279	0.000000	0.000000
06/16/92	168	0.79	0.79	0.000228	0.000228	0.000288	0.000288	0.000000	0.000000
06/17/92	169	5.66	5.66	0.001590	0.001590	0.000281	0.000281	0.000000	0.000000
06/18/92	170	4.63	4.63	0.001305	0.001305	0.000282	0.000282	0.000000	0.000000
06/19/92	171	0.93	0.93	0.000264	0.000264	0.000285	0.000285	0.000000	0.000000
06/22/92	174	2.08	2.08	0.000584	0.000584	0.000281	0.000281	0.000000	0.000000
06/23/92	175	3.07	3.07	0.000856	0.000856	0.000279	0.000279	0.000000	0.000000
06/24/92	176	5.56	5.56	0.001564	0.001564	0.000281	0.000281	0.000000	0.000000
06/25/92	177	0.82	0.82	0.000231	0.000231	0.000282	0.000282	0.000000	0.000000
06/26/92	178	4.84	4.84	0.001348	0.001348	0.000279	0.000279	0.000000	0.000000
06/29/92	181	4.40	4.40	0.001218	0.001218	0.000277	0.000277	0.000000	0.000000
06/30/92	182	6.99	6.99	0.001944	0.001944	0.000278	0.000278	0.000000	0.000000
07/01/92	183	4.60	4.60	0.001260	0.001260	0.000274	0.000274	0.000000	0.000000
07/02/92	184	4.33	4.33	0.001180	0.001180	0.000273	0.000273	0.000000	0.000000
07/06/92	188	4.80	4.80	0.001328	0.001328	0.000277	0.000277	0.000000	0.000000
07/07/92	189	1.72	7.03	0.000471	0.001935	0.000275	0.000275	-0.000000	-0.123595
07/08/92	190	0.97	0.97	0.000266	0.000266	0.000276	0.000276	0.000000	0.000000
07/09/92	191	5.70	9.85	0.001545	0.002737	0.000271	0.000278	-0.000007	-2.411131
07/10/92	192	10.42	10.42	0.002885	0.002885	0.000277	0.000277	0.000000	0.000000
07/13/92	195	4.55	4.55	0.001243	0.001243	0.000274	0.000274	0.000000	0.000000

Table F-2. Daily Calibration Data Summary (Channel B)

Cal Date	Julian Cal Date	Initial Zero A.C.	Final Zero A.C.	Initial Zero ppmC	Final Zero ppmC	Initial Cal Factor	Final Cal Factor	Cal Factor Drift	Cal Factor % Drift
07/15/92	197	7.29	7.29	0.001990	0.001990	0.000273	0.000273	0.000000	0.000000
07/16/92	198	9.68	9.68	0.002656	0.002656	0.000274	0.000274	0.000000	0.000000
07/17/92	199	10.42	10.42	0.002861	0.002861	0.000275	0.000275	0.000000	0.000000
07/21/92	203	14.78	14.78	0.004028	0.004028	0.000273	0.000273	0.000000	0.000000
07/27/92	209	15.29	15.29	0.004181	0.004181	0.000274	0.000274	0.000000	0.000000
07/29/92	211	14.04	14.04	0.003877	0.003877	0.000276	0.000276	0.000000	0.000000
07/30/92	212	5.81	5.81	0.001602	0.001602	0.000276	0.000276	0.000000	0.000000
07/31/92	213	7.56	7.56	0.001588	0.001588	0.000210	0.000210	0.000000	0.000000
08/03/92	216	8.95	0.00	0.001886	0.000000	0.000211	0.000210	0.000001	0.582858
08/04/92	217	6.47	9.59	0.001352	0.002015	0.000209	0.000210	-0.000001	-0.535905
08/05/92	218	6.39	6.93	0.001319	0.001449	0.000207	0.000209	-0.000003	-1.215426
08/06/92	219	3.68	3.68	0.000763	0.000763	0.000207	0.000207	0.000000	0.000000
08/07/92	220	9.38	5.58	0.001958	0.001158	0.000209	0.000208	0.000001	0.469112
08/10/92	223	10.45	10.45	0.002200	0.002200	0.000211	0.000211	0.000000	0.000000
08/12/92	225	5.90	9.33	0.001233	0.001948	0.000209	0.000209	0.000000	0.078676
08/13/92	226	10.06	10.90	0.002086	0.002282	0.000207	0.000209	-0.000002	-1.013913
08/14/92	227	7.09	7.09	0.001480	0.001480	0.000209	0.000209	0.000000	0.000000
08/17/92	230	10.47	10.47	0.002180	0.002180	0.000208	0.000208	0.000000	0.000000
08/19/92	232	12.00	12.00	0.002551	0.002551	0.000213	0.000213	0.000000	0.000000
08/20/92	233	5.88	12.05	0.001216	0.002494	0.000207	0.000207	-0.000000	-0.033503
08/21/92	234	6.46	9.67	0.001361	0.002035	0.000211	0.000211	0.000000	0.117231
08/24/92	237	7.63	7.63	0.001595	0.001595	0.000209	0.000209	0.000000	0.000000
08/25/92	238	6.67	6.67	0.001854	0.001854	0.000278	0.000278	0.000000	0.000000
08/26/92	239	4.16	6.64	0.001146	0.001823	0.000275	0.000275	0.000001	0.219098
08/27/92	240	9.36	6.45	0.002543	0.001776	0.000272	0.000276	-0.000004	-1.442559
08/28/92	241	5.40	5.17	0.001472	0.001395	0.000273	0.000270	0.000003	1.133507
08/31/92	244	11.62	12.87	0.003212	0.003741	0.000277	0.000291	-0.000014	-5.113906
09/01/92	245	7.09	5.20	0.001943	0.001425	0.000274	0.000274	-0.000000	-0.094796
09/03/92	247	9.65	6.67	0.002679	0.001834	0.000278	0.000275	0.000002	0.853152

Table F-2. Daily Calibration Data Summary (Channel B)

Cal Date	Julian Cal Date	Initial Zero A.C.	Final Zero A.C.	Initial Zero ppmC	Final Zero ppmC	Initial Cal Factor	Final Cal Factor	Cal Factor Drift	Cal Factor % Drift
09/04/92	248	4.16	6.72	0.001153	0.001859	0.000278	0.000277	0.000001	0.288131
09/08/92	252	6.33	11.51	0.001745	0.003169	0.000276	0.000275	0.000000	0.108752
09/09/92	253	6.02	5.11	0.001660	0.001402	0.000276	0.000274	0.000002	0.554976
09/10/92	254	4.92	5.97	0.001360	0.001659	0.000276	0.000278	-0.000001	-0.539965
09/11/92	255	6.65	8.60	0.001840	0.002398	0.000277	0.000279	-0.000002	-0.827617
09/14/92	258	8.60	5.80	0.002360	0.001604	0.000275	0.000277	-0.000002	-0.712792
09/15/92	259	5.27	2.02	0.001466	0.000567	0.000278	0.000282	-0.000003	-1.118048
09/16/92	260	6.90	9.37	0.001908	0.002606	0.000277	0.000278	-0.000002	-0.561079
09/17/92	261	7.67	7.67	0.002127	0.002127	0.000278	0.000278	0.000000	0.000000
09/18/92	262	3.60	3.60	0.000995	0.000995	0.000276	0.000276	0.000000	0.000000
09/21/92	265	9.42	8.07	0.002577	0.002223	0.000274	0.000275	-0.000002	-0.658298
09/22/92	266	5.79	5.79	0.001605	0.001605	0.000277	0.000277	0.000000	0.000000
09/23/92	267	5.30	6.06	0.001465	0.001675	0.000277	0.000277	0.000000	0.062513
09/24/92	268	3.04	9.96	0.000840	0.002777	0.000277	0.000279	-0.000002	-0.782632
09/25/92	269	5.77	12.86	0.001605	0.003547	0.000278	0.000276	0.000002	0.860376
09/28/92	272	6.65	6.65	0.001873	0.001873	0.000282	0.000282	0.000000	0.000000
09/29/92	273	42.18	42.18	0.011795	0.011795	0.000280	0.000280	0.000000	0.000000
09/30/92	274	31.47	31.47	0.008706	0.008706	0.000277	0.000277	0.000000	0.000000
10/02/92	276	4.20	7.10	0.001156	0.001956	0.000275	0.000276	-0.000000	-0.017138
10/06/92	280	6.78	5.43	0.001851	0.001538	0.000273	0.000283	-0.000010	-3.700180
10/07/92	281	6.03	6.03	0.001667	0.001667	0.000276	0.000276	0.000000	0.000000
10/08/92	282	10.44	10.44	0.002889	0.002889	0.000277	0.000277	0.000000	0.000000
10/13/92	287	1.93	1.93	0.000521	0.000521	0.000271	0.000271	0.000000	0.000000

Table F-3. Daily Calibration Data Summary (Channel C)

Cal Date	Julian Cal Date	Initial Zero A.C.	Final Zero A.C.	Initial Zero ppmC	Final Zero ppmC	Initial Cal Factor	Final Cal Factor	Cal Factor Drift	Cal Factor % Drift
06/02/92	154	2.08	2.08	0.000568	0.000568	0.000274	0.000274	0.000000	0.000000
06/03/92	155	0.00	0.00	0.000000	0.000000	0.000276	0.000276	0.000000	0.000000
06/04/92	156	0.00	0.00	0.000000	0.000000	0.000274	0.000274	0.000000	0.000000
06/05/92	157	0.00	0.00	0.000000	0.000000	0.000273	0.000273	0.000000	0.000000
06/08/92	160	2.37	2.37	0.000653	0.000653	0.000275	0.000275	0.000000	0.000000
06/09/92	161	0.52	0.52	0.000141	0.000141	0.000274	0.000274	0.000000	0.000000
06/10/92	162	2.74	2.74	0.000746	0.000746	0.000273	0.000273	0.000000	0.000000
06/11/92	163	1.29	1.29	0.000352	0.000352	0.000274	0.000274	0.000000	0.000000
06/12/92	164	0.30	0.30	0.000081	0.000081	0.000271	0.000271	0.000000	0.000000
06/15/92	167	1.50	1.50	0.000408	0.000408	0.000272	0.000272	0.000000	0.000000
06/16/92	168	1.99	1.99	0.000554	0.000554	0.000279	0.000279	0.000000	0.000000
06/17/92	169	0.82	0.82	0.000225	0.000225	0.000276	0.000276	0.000000	0.000000
06/18/92	170	0.00	0.00	0.000000	0.000000	0.000275	0.000275	0.000000	0.000000
06/19/92	171	0.29	0.29	0.000078	0.000078	0.000275	0.000275	0.000000	0.000000
06/22/92	174	4.17	4.17	0.001165	0.001165	0.000279	0.000279	0.000000	0.000000
06/23/92	175	0.40	0.40	0.000110	0.000110	0.000278	0.000278	0.000000	0.000000
06/24/92	176	1.21	1.21	0.000339	0.000339	0.000281	0.000281	0.000000	0.000000
06/25/92	177	0.00	0.00	0.000000	0.000000	0.000280	0.000280	0.000000	0.000000
06/26/92	178	1.78	1.78	0.000492	0.000492	0.000276	0.000276	0.000000	0.000000
06/29/92	181	0.91	0.91	0.000252	0.000252	0.000276	0.000276	0.000000	0.000000
06/30/92	182	1.39	1.39	0.000379	0.000379	0.000273	0.000273	0.000000	0.000000
07/01/92	183	3.90	3.90	0.001057	0.001057	0.000271	0.000271	0.000000	0.000000
07/02/92	184	1.66	1.66	0.000448	0.000448	0.000270	0.000270	0.000000	0.000000
07/06/92	188	0.00	0.00	0.000000	0.000000	0.000269	0.000269	0.000000	0.000000
07/07/92	189	0.94	0.00	0.000253	0.000000	0.000269	0.000272	-0.000003	-0.963655
07/08/92	190	1.27	4.89	0.000343	0.001328	0.000270	0.000272	-0.000002	-0.769565
07/09/92	191	1.50	0.00	0.000404	0.000000	0.000270	0.000273	-0.000003	-1.262180
07/10/92	192	0.36	0.36	0.000096	0.000096	0.000269	0.000269	0.000000	0.000000
07/13/92	195	0.61	1.16	0.000165	0.000313	0.000270	0.000271	-0.000001	-0.469840

Table F-3. Daily Calibration Data Summary (Channel C)

Cal Date	Julian Cal Date	Initial Zero A.C.	Final Zero A.C.	Initial Zero ppmC	Final Zero ppmC	Initial Cal Factor	Final Cal Factor	Cal Factor Drift	Cal Factor % Drift
07/14/92	196	0.71	0.71	0.000190	0.000190	0.000267	0.000267	0.000000	0.000000
07/15/92	197	0.62	0.62	0.000164	0.000164	0.000267	0.000267	0.000000	0.000000
07/16/92	198	0.00	0.00	0.000000	0.000000	0.000267	0.000267	0.000000	0.000000
07/17/92	199	0.12	0.00	0.000032	0.000000	0.000269	0.000269	-0.000000	-0.039260
07/20/92	202	0.92	4.79	0.000247	0.001294	0.000268	0.000270	-0.000002	-0.636480
07/21/92	203	0.00	0.00	0.000000	0.000000	0.000267	0.000267	0.000000	0.000000
07/22/92	204	0.09	0.15	0.000023	0.000039	0.000269	0.000268	0.000002	0.574158
07/23/92	205	0.53	0.53	0.000141	0.000141	0.000269	0.000269	0.000000	0.000000
07/24/92	206	0.30	0.30	0.000081	0.000081	0.000270	0.000270	0.000000	0.000000
07/25/92	207	0.12	0.12	0.000031	0.000031	0.000267	0.000267	0.000000	0.000000
07/26/92	208	0.00	0.00	0.000000	0.000000	0.000271	0.000271	0.000000	0.000000
07/27/92	209	0.00	0.00	0.000000	0.000000	0.000270	0.000270	0.000000	0.000[illegible]
07/29/92	211	1.53	3.06	0.000415	0.000829	0.000271	0.000271	0.000001	0.1874[illegible]
07/30/92	212	0.00	0.00	0.000000	0.000000	0.000267	0.000271	-0.000004	-1.444990
07/31/92	213	0.80	4.53	0.000166	0.000942	0.000208	0.000208	-0.000000	-0.068380
08/03/92	216	6.69	1.29	0.001374	0.000269	0.000206	0.000209	-0.000004	-1.744609
08/04/92	217	0.00	0.27	0.000000	0.000054	0.000203	0.000205	-0.000001	-0.656060
08/05/92	218	0.00	0.00	0.000000	0.000000	0.000203	0.000208	-0.000005	-2.238696
08/06/92	219	0.39	5.27	0.000080	0.001090	0.000206	0.000207	-0.000001	-0.617617
08/07/92	220	0.00	0.86	0.000000	0.000178	0.000207	0.000207	0.000000	0.052012
08/10/92	223	0.60	0.60	0.000125	0.000125	0.000208	0.000208	0.000000	0.000000
08/11/92	224	0.40	5.16	0.000080	0.001062	0.000204	0.000206	-0.000002	-1.179350
08/12/92	225	0.29	3.36	0.000058	0.000695	0.000204	0.000207	-0.000003	-1.430395
08/13/92	226	4.37	1.92	0.000887	0.000394	0.000203	0.000206	-0.000002	-1.229438
08/14/92	227	1.08	0.00	0.000219	0.000000	0.000203	0.000204	-0.000001	-0.295522
08/17/92	230	0.00	0.00	0.000000	0.000000	0.000206	0.000206	0.000000	0.000000
08/18/92	231	2.18	0.00	0.000445	0.000000	0.000205	0.000205	-0.000000	-0.001013
08/19/92	232	0.00	0.00	0.000000	0.000000	0.000204	0.000206	-0.000002	-0.809354
08/20/92	233	0.45	0.64	0.000092	0.000130	0.000205	0.000205	-0.000000	-0.051509

Table F-3. Daily Calibration Data Summary (Channel C)

Cal Date	Julian Cal Date	Initial Zero A.C.	Final Zero A.C.	Initial Zero ppmC	Final Zero ppmC	Initial Cal Factor	Final Cal Factor	Cal Factor Drift	Cal Factor % Drift
08/21/92	234	0.49	0.00	0.000099	0.000000	0.000205	0.000206	-0.000001	-0.640094
08/24/92	237	0.37	3.38	0.000075	0.000694	0.000204	0.000205	-0.000001	-0.534804
08/25/92	238	0.00	0.00	0.000000	0.000000	0.000271	0.000271	0.000000	0.000000
08/26/92	239	0.00	4.01	0.000000	0.001083	0.000268	0.000270	-0.000002	-0.784911
08/27/92	240	1.34	2.36	0.000358	0.000636	0.000268	0.000269	-0.000001	-0.407235
08/28/92	241	0.58	0.00	0.000155	0.000000	0.000267	0.000268	-0.000001	-0.190950
08/31/92	244	2.29	1.70	0.000614	0.000458	0.000269	0.000270	-0.000002	-0.567994
09/01/92	245	1.16	2.63	0.000310	0.000709	0.000268	0.000270	-0.000002	-0.771291
09/02/92	246	0.00	0.00	0.000000	0.000000	0.000268	0.000268	0.000000	0.000000
09/03/92	247	1.44	1.51	0.000386	0.000411	0.000269	0.000273	-0.000004	-1.611639
09/04/92	248	4.05	1.05	0.001102	0.000286	0.000272	0.000273	-0.000000	-0.098368
09/08/92	252	1.51	4.90	0.000414	0.001327	0.000275	0.000271	0.000004	1.591232
09/09/92	253	0.00	2.29	0.000000	0.000621	0.000270	0.000272	-0.000002	-0.816101
09/10/92	254	0.65	5.20	0.000174	0.001411	0.000269	0.000272	-0.000002	-0.919696
09/11/92	255	0.00	3.18	0.000000	0.000867	0.000270	0.000273	-0.000003	-1.259891
09/14/92	258	1.20	0.00	0.000320	0.000000	0.000267	0.000273	-0.000007	-2.497720
09/15/92	259	0.87	0.00	0.000235	0.000000	0.000271	0.000272	-0.000000	-0.109588
09/16/92	260	0.00	2.64	0.000000	0.000720	0.000272	0.000273	-0.000001	-0.280529
09/17/92	261	0.00	0.00	0.000000	0.000000	0.000273	0.000273	0.000000	0.000000
09/18/92	262	0.60	0.00	0.000160	0.000000	0.000269	0.000272	-0.000002	-0.852664
09/21/92	265	1.63	4.04	0.000440	0.001103	0.000270	0.000273	-0.000003	-1.251675
09/22/92	266	0.58	3.99	0.000157	0.001093	0.000273	0.000274	-0.000002	-0.637678
09/23/92	267	0.00	0.39	0.000000	0.000106	0.000273	0.000273	0.000001	0.225410
09/24/92	268	0.39	1.78	0.000105	0.000489	0.000274	0.000276	-0.000002	-0.690368
09/25/92	269	0.99	1.33	0.000270	0.000363	0.000273	0.000273	-0.000000	-0.020065
09/28/92	272	7.35	7.35	0.002041	0.002041	0.000278	0.000278	0.000000	0.000000
09/29/92	273	21.14	21.14	0.005766	0.005766	0.000273	0.000273	0.000000	0.000000
09/30/92	274	21.65	21.65	0.005835	0.005835	0.000270	0.000270	0.000000	0.000000
10/02/92	276	0.78	2.23	0.000207	0.000605	0.000267	0.000271	-0.000005	-1.693554

Table F-3. Daily Calibration Data Summary (Channel C)

Cal Date	Julian Cal Date	Initial Zero A.C.	Final Zero A.C.	Initial Zero ppmC	Final Zero ppmC	Initial Cal Factor	Final Cal Factor	Cal Factor Drift	Cal Factor % Drift
10/05/92	279	1.89	1.89	0.000502	0.000502	0.000266	0.000266	0.000000	0.000000
10/06/92	280	1.37	1.37	0.000370	0.000370	0.000270	0.000270	0.000000	0.000000
10/07/92	281	5.15	5.15	0.001375	0.001375	0.000267	0.000267	0.000000	0.000000
10/08/92	282	5.17	5.17	0.001385	0.001385	0.000268	0.000268	0.000000	0.000000
10/12/92	286	0.65	0.65	0.000170	0.000170	0.000263	0.000263	0.000000	0.000000
10/13/92	287	1.05	1.05	0.000281	0.000281	0.000267	0.000267	0.000000	0.000000
10/14/92	288	0.75	0.75	0.000201	0.000201	0.000268	0.000268	0.000000	0.000000
10/15/92	289	0.61	0.61	0.000160	0.000160	0.000265	0.000265	0.000000	0.000000
10/16/92	290	1.63	1.63	0.000439	0.000439	0.000270	0.000270	0.000000	0.000000

Table F-4. Daily Calibrationa Data Summary (Channel D)

Cal Date	Julian Cal Date	Initial Zero A.C.	Final Zero A.C	Initial Zero ppmC	Final Zero ppmC	Initial Cal Factor	Final Cal Factor	Cal Factor Drift	Cal Factor % Drift
06/02/92	154	1.98	1.98	0.000542	0.000542	0.000275	0.000275	0.000000	0.000000
06/03/92	155	1:36	1.36	0.000374	0.000374	0.000275	0.000275	0.000000	0.000000
06/04/92	156	0.89	0.89	0.000244	0.000244	0.000274	0.000274	0.000000	0.000000
06/05/92	157	1.17	1.17	0.000318	0.000318	0.000273	0.000273	0.000000	0.000000
06/08/92	160	4.58	4.58	0.001263	0.001263	0.000276	0.000276	0.000000	0.000000
06/09/92	161	0.00	0.00	0.000000	0.000000	0.000275	0.000275	0.000000	0.000000
06/10/92	162	1.93	1.93	0.000527	0.000527	0.000274	0.000274	0.000000	0.000000
06/11/92	163	2.19	2.19	0.000602	0.000602	0.000275	0.000275	0.000000	0.000000
06/12/92	164	0.00	0.00	0.000000	0.000000	0.000271	0.000271	0.000000	0.000000
06/15/92	167	2.88	2.88	0.000788	0.000788	0.000273	0.000273	0.000000	0.000000
06/16/92	168	0.00	0.00	0.000000	0.000000	0.000279	0.000279	0.000000	0.000000
06/17/92	169	0.87	0.87	0.000240	0.000240	0.000277	0.000277	0.000000	0.000000
06/18/92	170	2.20	2.20	0.000608	0.000608	0.000276	0.000276	0.000000	0.000000
06/19/92	171	0.00	0.00	0.000000	0.000000	0.000276	0.000276	0.000000	0.000000
06/22/92	174	0.81	0.81	0.000221	0.000221	0.000274	0.000274	0.000000	0.000000
06/23/92	175	3.04	3.04	0.000829	0.000829	0.000273	0.000273	0.000000	0.000000
06/24/92	176	2.57	2.57	0.000706	0.000706	0.000275	0.000275	0.000000	0.000000
06/25/92	177	5.65	5.65	0.001538	0.001538	0.000273	0.000273	0.000000	0.000000
06/26/92	178	3.15	3.15	0.000881	0.000881	0.000280	0.000280	0.000000	0.000000
06/29/92	181	0.14	0.14	0.000038	0.000038	0.000282	0.000282	0.000000	0.000000
06/30/92	182	1.97	1.97	0.000544	0.000544	0.000276	0.000276	0.000000	0.000000
07/01/92	183	0.55	0.55	0.000152	0.000152	0.000276	0.000276	0.000000	0.000000
07/02/92	184	0.00	0.00	0.000000	0.000000	0.000275	0.000275	0.000000	0.000000
07/06/92	188	0.00	0.00	0.000000	0.000000	0.000271	0.000271	0.000000	0.000000
07/07/92	189	0.00	0.75	0.000000	0.000207	0.000275	0.000278	-0.000003	-1.092018
07/08/92	190	1.05	1.72	0.000286	0.000476	0.000274	0.000276	-0.000003	-0.935503
07/09/92	191	0.00	2.09	0.000000	0.000578	0.000275	0.000276	-0.000002	-0.554654
07/10/92	192	0.09	0.09	0.000025	0.000025	0.000275	0.000275	0.000000	0.000000
07/13/92	195	0.57	5.52	0.000154	0.001497	0.000271	0.000271	-0.000001	-0.223776

Table F-4. Daily Calibrationa Data Summary (Channel D)

Cal Date	Julian Cal Date	Initial Zero A.C.	Final Zero A.C	Initial Zero ppmC	Final Zero ppmC	Initial Cal Factor	Final Cal Factor	Cal Factor Drift	Cal Factor % Drift
07/14/92	196	2.41	2.41	0.000649	0.000649	0.000270	0.000270	0.000000	0.000000
07/15/92	197	0.00	0.00	0.000000	0.000000	0.000268	0.000268	0.000000	0.000000
07/16/92	198	0.67	0.67	0.000180	0.000180	0.000268	0.000268	0.000000	0.000000
07/17/92	199	0.00	4.50	0.000000	0.001219	0.000271	0.000271	-0.000000	-0.008220
07/20/92	202	0.00	0.00	0.000000	0.000000	0.000270	0.000273	-0.000003	-1.246077
07/21/92	203	0.47	0.47	0.000127	0.000127	0.000271	0.000271	0.000000	0.000000
07/22/92	204	0.00	1.32	0.000000	0.000358	0.000272	0.000272	0.000000	0.120542
07/23/92	205	0.00	0.00	0.000000	0.000000	0.000274	0.000274	0.000000	0.000000
07/24/92	206	0.53	0.53	0.000142	0.000142	0.000271	0.000271	0.000000	0.00
07/25/92	207	0.10	0.10	0.000026	0.000026	0.000274	0.000274	0.000000	0.000000
07/26/92	208	1.13	1.13	0.000322	0.000322	0.000285	0.000285	0.000000	0.000000
07/27/92	209	0.00	0.00	0.000000	0.000000	0.000274	0.000274	0.000000	0.000000
07/29/92	211	1.41	4.19	0.000385	0.001140	0.000273	0.000272	0.000001	0.389211
07/30/92	212	0.00	0.00	0.000000	0.000000	0.000266	0.000266	0.000000	0.000000
07/31/92	213	0.94	0.94	0.000196	0.000196	0.000210	0.000210	0.000000	0.000000
08/03/92	216	4.20	0.00	0.000880	0.000000	0.000209	0.000210	-0.000000	-0.099864
08/04/92	217	0.60	0.61	0.000125	0.000127	0.000208	0.000208	0.000000	0.053929
08/05/92	218	0.00	0.00	0.000000	0.000000	0.000206	0.000206	-0.000000	-0.009333
08/06/92	219	0.16	2.08	0.000033	0.000431	0.000208	0.000208	0.000000	0.002260
08/07/92	220	0.29	0.00	0.000060	0.000000	0.000208	0.000208	0.000000	0.136846
08/10/92	223	1.25	1.31	0.000256	0.000273	0.000206	0.000208	-0.000003	-1.370158
08/11/92	224	2.41	7.15	0.000494	0.001483	0.000205	0.000208	-0.000003	-1.339858
08/12/92	225	0.00	0.00	0.000000	0.000000	0.000207	0.000207	-0.000001	-0.291439
08/13/92	226	0.00	0.00	0.000000	0.000000	0.000205	0.000206	-0.000001	-0.342008
08/14/92	227	1.60	0.00	0.000327	0.000000	0.000205	0.000205	0.000000	0.209794
08/17/92	230	0.97	0.97	0.000197	0.000197	0.000205	0.000205	0.000000	0.000000
08/18/92	231	1.00	2.91	0.000206	0.000605	0.000206	0.000208	-0.000002	-0.890324
08/19/92	232	3.57	2.56	0.000730	0.000534	0.000205	0.000208	-0.000004	-1.738338
08/20/92	233	0.00	1.16	0.000000	0.000241	0.000206	0.000208	-0.000002	-1.171013

Table F-4. Daily Calibrationa Data Summary (Channel D)

Cal Date	Julian Cal Date	Initial Zero A.C.	Final Zero A.C	Initial Zero ppmC	Final Zero ppmC	Initial Cal Factor	Final Cal Factor	Cal Factor Drift	Cal Factor % Drift
08/21/92	234	3.57	2.58	0.000733	0.000536	0.000206	0.000208	-0.000003	-1.282082
08/24/92	237	1.51	0.00	0.000308	0.000000	0.000205	0.000207	-0.000002	-1.053166
08/25/92	238	3.42	3.42	0.000937	0.000937	0.000274	0.000274	0.000000	0.000000
08/26/92	239	0.81	5.62	0.000218	0.001529	0.000271	0.000272	-0.000002	-0.569480
08/27/92	240	0.42	0.58	0.000113	0.000156	0.000272	0.000271	0.000001	0.523855
08/28/92	241	3.83	1.29	0.001029	0.000345	0.000269	0.000269	-0.000000	-0.021671
08/31/92	244	6.00	5.69	0.001623	0.001551	0.000270	0.000273	-0.000002	-0.892551
09/01/92	245	3.68	7.17	0.000994	0.001949	0.000271	0.000272	-0.000002	-0.576051
09/02/92	246	2.02	2.02	0.000546	0.000546	0.000270	0.000270	0.000000	0.000000
09/03/92	247	2.21	6.89	0.000599	0.001899	0.000272	0.000276	-0.000004	-1.381388
09/04/92	248	1.94	0.00	0.000531	0.000000	0.000274	0.000277	-0.000003	-0.935248
09/08/92	252	7.13	4.67	0.001964	0.001269	0.000276	0.000272	0.000004	1.333280
09/09/92	253	0.00	4.39	0.000000	0.001194	0.000272	0.000272	-0.000001	-0.214943
09/10/92	254	1.61	7.15	0.000435	0.001940	0.000270	0.000272	-0.000002	-0.579074
09/11/92	255	5.57	5.36	0.001506	0.001462	0.000270	0.000273	-0.000003	-0.952549
09/14/92	258	1.74	4.43	0.000474	0.001201	0.000273	0.000271	0.000001	0.545389
09/15/92	259	3.22	0.00	0.000873	0.000000	0.000271	0.000272	-0.000001	-0.514942
09/16/92	260	0.95	1.49	0.000259	0.000406	0.000274	0.000273	0.000002	0.626497
09/17/92	261	0.61	0.61	0.000166	0.000166	0.000275	0.000275	0.000000	0.000000
09/18/92	262	4.48	0.16	0.001210	0.000043	0.000270	0.000271	-0.000001	-0.341539
09/21/92	265	2.70	1.79	0.000736	0.000489	0.000273	0.000273	-0.000000	-0.124188
09/22/92	266	2.64	5.76	0.000720	0.001587	0.000273	0.000276	-0.000003	-0.949977
09/23/92	267	1.31	3.63	0.000358	0.000996	0.000273	0.000274	-0.000001	-0.460442
09/24/92	268	4.97	2.60	0.001365	0.000716	0.000275	0.000275	-0.000001	-0.250487
09/25/92	269	3.98	3.21	0.001089	0.000884	0.000274	0.000276	-0.000002	-0.701458
09/28/92	272	3.59	3.59	0.000986	0.000986	0.000275	0.000275	0.000000	0.000000
09/29/92	273	21.53	21.53	0.005904	0.005904	0.000274	0.000274	0.000000	0.000000
09/30/92	274	21.63	21.63	0.005843	0.005843	0.000270	0.000270	0.000000	0.000000
10/02/92	276	5.91	3.45	0.001590	0.000936	0.000269	0.000272	-0.000003	-0.934183

Table F-4. Daily Calibrationa Data Summary (Channel D)

Cal Date	Julian Cal Date	Initial Zero A.C.	Final Zero A.C	Initial Zero ppmC	Final Zero ppmC	Initial Cal Factor	Final Cal Factor	Cal Factor Drift	Cal Factor % Drift
10/05/92	279	2.61	2.61	0.000699	0.000699	0.000268	0.000268	0.000000	0.000000
10/06/92	280	0.17	0.17	0.000046	0.000046	0.000272	0.000272	0.000000	0.000000
10/07/92	281	1.70	1.70	0.000456	0.000456	0.000269	0.000269	0.000000	0.000000
10/08/92	282	4.22	4.22	0.001136	0.001136	0.000269	0.000269	0.000000	0.000000
10/12/92	286	0.71	0.71	0.000187	0.000187	0.000266	0.000266	0.000000	0.000000
10/13/92	287	0.00	0.00	0.000000	0.000000	0.000268	0.000268	0.000000	0.000000
10/14/92	288	0.27	0.27	0.000072	0.000072	0.000267	0.000267	0.000000	0.000000
10/15/92	289	2.05	2.05	0.000554	0.000554	0.000270	0.000270	0.000000	0.000000
10/16/92	290	4.81	4.81	0.001298	0.001298	0.000270	0.000270	0.000000	0.000000

APPENDIX G

1992 NMOC IN-HOUSE QUALITY CONTROL SAMPLES

Table G-1. NMOC In-house Quality Control Samples (Channel A)

Date Analyzed	Julian Date Analyzed	QC ID Number	Calculated NMOC ppmC	Measured NMOC ppmC	NMOC Bias ppmC	NMOC Percent Bias
10-Jul-92	192	1170	1.052	1.064	0.012	1.141
13-Jul-92	195	1359	0.869	0.950	0.081	9.321
14-Jul-92	196	1204	1.111	1.120	0.009	0.810
16-Jul-92	198	1242	1.411	1.380	-0.031	-2.197
20-Jul-92	202	1292	0.966	0.985	0.019	1.967
21-Jul-92	203	1313	0.985	1.020	0.035	3.553
27-Jul-92	209	1410	0.894	0.973	0.079	8.837
29-Jul-92	211	1481	0.865	0.886	0.021	2.428
04-Aug-92	217	1578	0.767	0.796	0.029	3.781
07-Aug-92	220	1652	0.754	0.772	0.018	2.387
10-Aug-92	223	1696	0.000	0.015	0.015	.
11-Aug-92	224	1723	1.157	1.170	0.013	1.124
12-Aug-92	225	1744	1.077	1.300	0.223	20.706
14-Aug-92	227	1791	1.022	1.040	0.018	1.761
17-Aug-92	230	1825	0.974	1.064	0.090	9.240
18-Aug-92	231	1797	0.693	0.732	0.039	5.628
19-Aug-92	232	1878	0.721	0.795	0.074	10.264
24-Aug-92	237	1958	0.654	0.703	0.049	7.492
25-Aug-92	238	2000	0.607	0.597	-0.010	-1.647
26-Aug-92	239	2035	0.703	0.696	-0.007	-0.996
04-Sep-92	248	2212	0.671	0.676	0.005	0.745

Table G-2. NMOC In-house Quality Control Samples (Channel B)

Date Analyzed	Julian Date Analyzed	QC ID Number	Calculated NMOC ppmC	Measured NMOC ppmC	NMOC Bias ppmC	NMOC Percent Bias
10-Jul-92	192	1170	1.052	1.083	0.031	2.947
13-Jul-92	195	1359	0.869	0.905	0.036	4.143
16-Jul-92	198	1242	1.411	1.466	0.055	3.898
21-Jul-92	203	1313	0.985	1.020	0.035	3.553
27-Jul-92	209	1410	0.894	0.973	0.079	8.837
29-Jul-92	211	1481	0.865	0.887	0.022	2.543
04-Aug-92	217	1578	0.767	0.814	0.047	6.128
07-Aug-92	220	1652	0.754	0.787	0.033	4.377
10-Aug-92	223	1696	0.000	0.034	0.034	.
12-Aug-92	225	1744	1.077	1.280	0.203	18.849
14-Aug-92	227	1791	1.022	1.040	0.018	1.761
17-Aug-92	230	1825	0.974	1.010	0.036	3.696
19-Aug-92	232	1878	0.721	0.772	0.051	7.074
24-Aug-92	237	1958	0.654	0.727	0.073	11.162
25-Aug-92	238	2000	0.607	0.602	-0.005	-0.824
26-Aug-92	239	2035	0.703	0.716	0.013	1.849
04-Sep-92	248	2212	0.671	0.692	0.021	3.130

Table G-3. NMOC In-house Quality Control Samples (Channel C)

Date Analyzed	Julian Date Analyzed	QC ID Number	Calculated NMOC ppmC	Measured NMOC ppmC	NMOC Bias ppmC	NMOC Percent Bias
10-Jul-92	192	1170	1.052	1.040	-0.012	-1.141
13-Jul-92	195	1359	0.869	0.904	0.035	4.028
14-Jul-92	196	1204	1.111	1.100	-0.011	-0.990
16-Jul-92	198	1242	1.411	1.400	-0.011	-0.780
20-Jul-92	202	1292	0.966	0.955	-0.011	-1.139
21-Jul-92	203	1313	0.985	1.010	0.025	2.538
27-Jul-92	209	1410	0.894	0.897	0.003	0.336
29-Jul-92	211	1481	0.865	0.881	0.016	1.850
30-Jul-92	212	1506	0.755	0.760	0.005	0.662
04-Aug-92	217	1578	0.767	0.784	0.017	2.216
07-Aug-92	220	1652	0.754	0.747	-0.007	-0.928
10-Aug-92	223	1696	0.000	0.005	0.005	.
11-Aug-92	224	1723	1.157	1.170	0.013	1.124
12-Aug-92	225	1744	1.077	1.160	0.083	7.707
14-Aug-92	227	1791	1.022	1.040	0.018	1.761
17-Aug-92	230	1825	0.974	0.992	0.018	1.848
18-Aug-92	231	1797	0.693	0.746	0.053	7.648
19-Aug-92	232	1878	0.721	0.741	0.020	2.774
24-Aug-92	237	1958	0.654	0.711	0.057	8.716
25-Aug-92	238	2000	0.607	0.592	-0.015	-2.471
26-Aug-92	239	2035	0.703	0.690	-0.013	-1.849
04-Sep-92	248	2212	0.671	0.652	-0.019	-2.832

Table G-4. NMOC In-house Quality Control Samples (Channel D)

Date Analyzed	Julian Date Analyzed	QC ID Number	Calculated NMOC ppmC	Measured NMOC ppmC	NMOC Bias ppmC	NMOC Percent Bias
10-Jul-92	192	1170	1.052	1.030	-0.022	-2.091
13-Jul-92	195	1359	0.869	0.872	0.003	0.345
14-Jul-92	196	1204	1.111	1.090	-0.021	-1.890
16-Jul-92	198	1242	1.411	1.382	-0.029	-2.055
20-Jul-92	202	1292	0.966	0.937	-0.029	-3.002
21-Jul-92	203	1313	0.985	1.020	0.035	3.553
27-Jul-92	209	1410	0.894	0.888	-0.006	-0.671
29-Jul-92	211	1481	0.865	0.838	-0.027	-3.121
30-Jul-92	212	1506	0.755	0.768	0.013	1.682
04-Aug-92	217	1578	0.767	0.764	-0.003	-0.391
07-Aug-92	220	1652	0.754	0.742	-0.012	-1.592
10-Aug-92	223	1696	0.000	0.004	0.004	.
11-Aug-92	224	1723	1.157	1.150	-0.007	-0.605
12-Aug-92	225	1744	1.077	1.200	0.123	11.421
14-Aug-92	227	1791	1.022	1.030	0.008	0.783
17-Aug-92	230	1825	0.974	0.998	0.024	2.464
18-Aug-92	231	1797	0.693	0.716	0.023	3.319
19-Aug-92	232	1878	0.721	0.787	0.066	9.154
24-Aug-92	237	1958	0.654	0.721	0.067	10.245
25-Aug-92	238	2000	0.607	0.601	-0.006	-0.988
26-Aug-92	239	2035	0.703	0.682	-0.021	-2.987
04-Sep-92	248	2212	0.671	0.661	-0.010	-1.490

APPENDIX H

1992 MULTIPLE DETECTOR SPECIATED THREE-HOUR SITE DATA SUMMARIES

TABLE H-1. MULTIPLE DETECTOR SPECIATED UATMP DATA SUMMARY FOR B1AL

Sample Date	8/12/92		9/01/92		9/10/92		9/15/92		9/15/92	
Sample ID	1977		2192		2320		2378D		2379D	
Compound	Concentration, ppbv									
Acetylene	<1.00		<1.00		<1.00		<1.00		<1.00	
Propylene	1.08	(H)	3.64	(L)	4.36	(H)	2.30	(H)	2.45	(H)
Chloromethane	<0.20		<0.20		<0.20		<0.20		<0.20	
Vinyl Chloride	<0.20		<0.20		<0.20		<0.20		<0.20	
1,3-Butadiene	<0.10		<0.10		<0.10		<0.10		<0.10	
Bromomethane	<0.20		<0.20		<0.20		<0.20		<0.20	
Chloroethane	<0.10		<0.10		<0.10		<0.10		<0.10	
Methylene Chloride	1.22	(M)	<0.11		<0.11		<0.11		<0.11	
trans-1,2-Dichloroethylene	<0.04		<0.04		<0.04		<0.04		<0.04	
1,1-Dichloroethane	0.25	(L)	1.05	(L)	1.08	(L)	0.44	(L)	0.44	(L)
Chloroprene	<0.06		<0.06		<0.06		<0.06		<0.06	
Bromochloromethane	<0.003		<0.003		<0.003		<0.003		<0.003	
Chloroform	0.14	(L)	0.25	(L)	0.27	(H)	0.26	(L)	0.22	(L)
1,2-Dichloroethane	1.08	(L)	<0.04		4.71	(L)	<0.04		<0.04	
1,1,1-Trichloroethane	0.54	(L)	1.47	(L)	1.36	(L)	0.95	(L)	0.92	(L)
Benzene	0.63	(H)	2.11	(H)	2.24	(L)	1.03	(H)	1.00	(H)
Carbon tetrachloride	0.12	(L)	0.13	(L)	0.14	(L)	0.14	(L)	0.13	(L)
1,2-Dichloropropane	<0.04		<0.04		<0.04		<0.04		<0.04	
Bromodichloromethane	<0.001		<0.001		<0.001		<0.001		<0.001	
Trichloroethylene	0.05	(L)	0.13	(L)	0.13	(L)	0.14	(L)	<0.004	
cis-1,3-Dichloropropylene	<0.04		<0.04		<0.04		<0.04		<0.04	
trans-1,3-Dichloropropylene	<0.04		<0.04		<0.04		<0.04		<0.04	
1,1,2-Trichloroethane	<0.04		<0.04		<0.04		<0.04		<0.04	
Toluene	1.55	(H)	4.82	(H)	5.58	(H)	2.61	(H)	2.63	(H)
Dibromochloromethane	<0.001		<0.001		<0.001		<0.001		<0.001	
n-Octane	<0.03		<0.03		<0.03		<0.03		<0.03	
Tetrachloroethylene	0.03	(L)	0.10	(L)	0.19	(H)	0.11	(H)	0.10	(L)
Chlorobenzene	0.04	(H)	<0.02		0.09	(H)	0.07	(H)	<0.02	
Ethylbenzene	0.24	(H)	0.96	(H)	1.03	(H)	0.72	(H)	0.70	(H)
m/p-Xylene/Bromoform	1.19	(L)	4.99	(L)	5.17	(L)	3.28	(L)	3.24	(L)
Styrene	0.11	(L)	0.64	(M)	0.69	(M)	0.30	(H)	0.27	(H)
o-Xylene/1,1,2,2-Tetrachloroethane	0.57	(L)	2.53	(L)	2.66	(L)	1.43	(L)	1.39	(L)
m-Dichlorobenzene	0.11	(H)	0.14	(M)	0.12	(M)	0.14	(H)	<0.02	
p-Dichlorobenzene	0.08	(L)	0.11	(H)	0.14	(H)	0.10	(L)	0.05	(H)
o-Dichlorobenzene	0.08	(M)	0.15	(H)	0.14	(H)	0.11	(L)	0.08	(L)

(H) High confidence level (M) Medium confidence level (L) Low confidence level (Continued)

D Duplicate sample

TABLE H-1. B1AL (Continued)

Sample Date	9/15/92		9/16/92		9/18/92		9/23/92		9/29/92	
Sample ID	2379R		1410		2462		2515		2595	
Compound	Concentration, ppbv									
Acetylene	<1.00		<1.00		<1.00		<1.00		<1.00	
Propylene	2.20	(L)	4.82	(L)	1.41	(H)	0.56	(L)	0.82	(H)
Chloromethane	<0.20		0.89	(L)	<0.20		0.42	(L)	<0.20	
Vinyl Chloride	<0.20		<0.20		<0.20		<0.20		<0.20	
1,3-Butadiene	<0.10		<0.10		<0.10		<0.10		<0.10	
Bromomethane	<0.20		<0.20		<0.20		<0.20		<0.20	
Chloroethane	<0.10		<0.10		<0.10		<0.10		<0.10	
Methylene Chloride	<0.11		4.52	(M)	<0.11		<0.11		<0.11	
trans-1,2-Dichloroethylene	<0.04		<0.04		<0.04		<0.04		<0.04	
1,1-Dichloroethane	0.44	(L)	0.68	(L)	0.64	(L)	0.12	(L)	0.16	(L)
Chloroprene	<0.06		<0.06		<0.06		<0.06		<0.06	
Bromochloromethane	<0.003		<0.003		<0.003		<0.003		<0.003	
Chloroform	0.21	(L)	0.17	(L)	0.14	(L)	0.09	(L)	0.07	(L)
1,2-Dichloroethane	3.06	(L)	<0.04		0.82	(L)	0.39	(L)	<0.04	
1,1,1-Trichloroethane	0.83	(L)	1.11	(L)	0.70	(H)	0.60	(M)	0.47	(L)
Benzene	0.98	(H)	1.60	(H)	0.69	(H)	0.36	(H)	0.36	(H)
Carbon tetrachloride	0.11	(L)	0.13	(L)	0.13	(L)	0.12	(L)	0.12	(L)
1,2-Dichloropropane	1.14	(L)	<0.04		<0.04		<0.04		<0.04	
Bromodichloromethane	<0.001		<0.001		<0.001		<0.001		<0.001	
Trichloroethylene	0.10	(L)	0.08	(L)	0.09	(L)	0.07	(L)	0.04	(L)
cis-1,3-Dichloropropylene	<0.04		<0.04		<0.04		<0.04		<0.04	
trans-1,3-Dichloropropylene	<0.04		<0.04		<0.04		<0.04		<0.04	
1,1,2-Trichloroethane	<0.04		<0.04		<0.04		<0.04		<0.04	
Toluene	2.45	(H)	4.04	(H)	1.80	(H)	1.30	(H)	0.77	(H)
Dibromochloromethane	<0.001		<0.001		<0.001		<0.001		<0.001	
n-Octane	<0.03		<0.03		<0.03		<0.03		<0.03	
Tetrachloroethylene	0.09	(H)	0.12	(L)	0.09	(L)	0.06	(M)	0.68	(L)
Chlorobenzene	<0.02		0.11	(M)	0.05	(H)	0.02	(H)	<0.02	
Ethylbenzene	0.65	(H)	1.00	(H)	0.28	(H)	0.14	(H)	0.12	(H)
m/p-Xylene/Bromoform	3.01	(L)	4.92	(L)	1.33	(L)	0.69	(L)	0.55	(L)
Styrene	0.24	(M)	0.54	(M)	0.20	(M)	0.11	(M)	0.04	(L)
o-Xylene/1,1,2,2-Tetrachloroethane	1.27	(L)	2.26	(L)	0.57	(L)	0.30	(L)	0.30	(L)
m-Dichlorobenzene	0.09	(L)	<0.02		0.13	(H)	0.09	(L)	<0.02	
p-Dichlorobenzene	0.06	(H)	<0.09		0.08	(H)	0.05	(M)	0.02	(H)
o-Dichlorobenzene	<0.02		<0.02		0.13	(M)	0.08	(M)	<0.02	

(H) High confidence level (M) Medium confidence level (L) Low confidence level

R Replicate analysis

TABLE H-2. MULTIPLE DETECTOR SPECIATED UATMP DATA SUMMARY FOR B2AL

Sample Date	8/20/92		8/24/92		8/26/92		8/28/92		9/02/92	
Sample ID	1976		2039		2061		2139		2223	
Compound	Concentration, ppbv									
Acetylene	<1.00		<1.00		<1.00		<1.00		<1.00	
Propylene	1.28	(L)	0.27	(L)	0.53	(H)	<0.10		1.21	(L)
Chloromethane	<0.20		<0.20		<0.20		<0.20		<0.20	
Vinyl Chloride	<0.20		<0.20		<0.20		<0.20		<0.20	
1,3-Butadiene	<0.10		<0.10		<0.10		<0.10		<0.10	
Bromomethane	<0.20		<0.20		<0.20		<0.20		<0.20	
Chloroethane	<0.10		<0.10		<0.10		<0.10		<0.10	
Methylene Chloride	1.02	(H)	<0.11		<0.11		<0.11		<0.11	
trans-1,2-Dichloroethylene	<0.04		<0.04		<0.04		<0.04		<0.04	
1,1-Dichloroethane	0.32	(L)	<0.04		<0.04		<0.04		<0.04	
Chloroprene	<0.06		<0.06		<0.06		<0.06		<0.06	
Bromochloromethane	<0.003		<0.003		<0.003		<0.003		<0.003	
Chloroform	0.08	(L)	0.10	(L)	0.07	(L)	0.08	(L)	0.08	(L)
1,2-Dichloroethane	0.37	(L)	0.08	(L)	0.11	(L)	<0.04		0.55	(L)
1,1,1-Trichloroethane	0.39	(L)	0.47	(L)	0.38	(L)	0.43	(L)	0.37	(L)
Benzene	0.36	(H)	0.17	(H)	0.15	(H)	0.19	(H)	0.56	(H)
Carbon tetrachloride	0.10	(L)	0.13	(L)	0.11	(L)	0.11	(L)	0.10	(L)
1.2-Dichloropropane	<0.04		<0.04		<0.04		<0.04		<0.04	
Bromodichloromethane	<0.001		<0.001		<0.001		<0.001		<0.001	
Trichloroethylene	0.01	(L)	0.02	(L)	0.04	(L)	0.02	(L)	0.02	(L)
cis-1,3-Dichloropropylene	<0.04		<0.04		<0.04		<0.04		<0.04	
trans-1,3-Dichloropropylene	<0.04		<0.04		<0.04		<0.04		<0.04	
1,1,2-Trichloroethane	<0.04		<0.04		<0.04		<0.04		<0.04	
Toluene	0.71	(H)	0.26	(H)	0.33	(H)	0.37	(H)	0.91	(H)
Dibromochloromethane	<0.001		<0.001		<0.001		<0.001		<0.001	
n-Octane	<0.03		<0.03		<0.03		<0.03		<0.03	
Tetrachloroethylene	0.01	(L)	0.01	(L)	0.01	(H)	0.02	(L)	0.01	(H)
Chlorobenzene	<0.02		<0.02		<0.02		0.02	(L)	0.02	(H)
Ethylbenzene	0.10	(L)	0.05	(H)	0.06	(H)	0.06	(L)	0.16	(H)
m/p-Xylene/Bromoform	0.52	(L)	0.22	(L)	0.25	(H)	0.26	(L)	0.80	(L)
Styrene	0.08	(H)	0.06	(M)	0.05	(H)	0.06	(L)	0.12	(L)
o-Xylene/1,1,2,2-Tetrachloroethane	0.21	(L)	0.03	(L)	0.08	(L)	0.11	(L)	0.38	(L)
m-Dichlorobenzene	0.04	(L)	0.08	(L)	0.07	(H)	0.03	(H)	0.04	(L)
p-Dichlorobenzene	0.03	(L)	0.04	(M)	0.04	(H)	0.03	(H)	0.03	(L)
o-Dichlorobenzene	<0.02		0.06	(H)	0.07	(L)	0.04	(L)	0.11	(L)

(H) High confidence level (M) Medium confidence level (L) Low confidence level (Continued)

TABLE H-2. B2AL (Continued)

Sample Date	9/03/92		9/03/92		9/03/92		9/17/92		9/29/92	
Sample ID	2226D		2227D		2227R		2419		2594	
Compound	Concentration, ppbv									
Acetylene	<1.00		<1.00		<1.00		<1.00		<1.00	
Propylene	1.03	(H)	0.92	(L)	1.19	(H)	2.62	(L)	0.39	(H)
Chloromethane	<0.20		0.62	(L)	0.94	(H)	<0.20		0.45	(L)
Vinyl Chloride	<0.20		<0.20		<0.20		<0.20		<0.20	
1,3-Butadiene	<0.10		<0.10		<0.10		<0.10		<0.10	
Bromomethane	<0.20		<0.20		<0.20		<0.20		<0.20	
Chloroethane	<0.10		<0.10		<0.10		<0.10		<0.10	
Methylene Chloride	<0.11		<0.11		0.44	(L)	<0.11		<0.11	
trans-1,2-Dichloroethylene	<0.04		<0.04		<0.04		<0.04		<0.04	
1,1-Dichloroethane	0.14	(L)	0.14	(L)	<0.04		<0.04		<0.04	
Chloroprene	<0.06		<0.06		<0.06		<0.06		<0.06	
Bromochloromethane	<0.003		<0.003		<0.003		<0.003		<0.003	
Chloroform	0.09	(L)	0.08	(L)	0.07	(L)	0.09	(L)	0.05	(L)
1,2-Dichloroethane	0.56	(L)	0.53	(L)	0.55	(L)	<0.04		<0.04	
1,1,1-Trichloroethane	0.47	(H)	0.38	(L)	0.36	(L)	0.50	(L)	0.29	(L)
Benzene	0.40	(H)	0.38	(H)	0.38	(H)	0.42	(H)	0.15	(H)
Carbon tetrachloride	0.13	(L)	0.14	(L)	0.12	(L)	0.12	(L)	0.09	(L)
1,2-Dichloropropane	<0.04		<0.04		<0.04		<0.04		<0.04	
Bromodichloromethane	<0.001		<0.001		<0.001		<0.001		<0.001	
Trichloroethylene	0.03	(L)	0.03	(H)	0.02	(L)	0.03	(L)	0.01	(L)
cis-1,3-Dichloropropylene	<0.04		<0.04		<0.04		<0.04		<0.04	
trans-1,3-Dichloropropylene	<0.04		<0.04		<0.04		<0.04		<0.04	
1,1,2-Trichloroethane	<0.04		<0.04		<0.04		<0.04		<0.04	
Toluene	0.74	(H)	0.93	(H)	0.92	(H)	0.89	(H)	0.14	(H)
Dibromochloromethane	<0.001		<0.001		<0.001		<0.001		<0.001	
n-Octane	<0.03		<0.03		<0.03		<0.03		<0.03	
Tetrachloroethylene	0.01	(L)	0.02	(L)	0.01	(L)	0.04	(L)	0.01	(L)
Chlorobenzene	<0.02		<0.02		0.02	(H)	<0.02		<0.02	
Ethylbenzene	0.14	(H)	0.14	(H)	0.12	(H)	0.12	(H)	0.02	(L)
m/p-Xylene/Bromoform	0.66	(L)	0.70	(L)	0.61	(L)	0.60	(L)	0.11	(L)
Styrene	0.12	(H)	0.13	(H)	0.10	(H)	0.10	(M)	0.03	(L)
o-Xylene/1,1,2,2-Tetrachloroethane	0.28	(L)	0.30	(L)	0.28	(M)	0.26	(L)	0.06	(L)
m-Dichlorobenzene	0.07	(M)	0.06	(M)	0.04	(M)	<0.02		<0.02	
p-Dichlorobenzene	0.04	(L)	0.04	(M)	0.04	(M)	0.04	(L)	<0.09	
o-Dichlorobenzene	0.07	(M)	0.12	(M)	0.10	(M)	0.06	(L)	<0.02	

(H) High confidence level (M) Medium confidence level (L) Low confidence level

R Replicate analysis D Duplicate sample

TABLE H-3. MULTIPLE DETECTOR SPECIATED UATMP DATA SUMMARY FOR B3AL

Sample Date	8/20/92		8/24/92		8/25/92		8/31/92		8/31/92	
Sample ID	1951		2011		2045		2132D		2133D	
Compound	Concentration, ppbv									
Acetylene	<1.00		<1.00		<1.00		<1.00		<1.00	
Propylene	1.11	(M)	0.49	(H)	0.60	(M)	2.37	(H)	1.20	(H)
Chloromethane	1.44	(L)	<0.20		0.43	(L)	1.34	(L)	0.85	(L)
Vinyl Chloride	<0.20		<0.20		<0.20		<0.20		<0.20	
1,3-Butadiene	<0.10		<0.10		<0.10		<0.10		<0.10	
Bromomethane	<0.20		<0.20		<0.20		<0.20		<0.20	
Chloroethane	<0.10		<0.10		<0.10		0.10	(L)	<0.10	
Methylene Chloride	<0.11		<0.11		<0.11		<0.11		<0.11	
trans-1,2-Dichloroethylene	<0.04		<0.04		<0.04		<0.04		<0.04	
1,1-Dichloroethane	0.23	(L)	<0.04		<0.04		0.35	(L)	0.34	(L)
Chloroprene	<0.06		<0.06		<0.06		<0.06		<0.06	
Bromochloromethane	<0.003		<0.003		<0.003		<0.003		<0.003	
Chloroform	0.13	(L)	0.09	(L)	0.08	(L)	0.26	(L)	0.23	(L)
1,2-Dichloroethane	0.64	(L)	<0.04		<0.04		1.00	(L)	1.00	(L)
1,1,1-Trichloroethane	0.76	(L)	0.33	(L)	0.32	(L)	1.32	(M)	1.34	(M)
Benzene	0.47	(H)	0.12	(H)	0.13	(H)	0.78	(H)	0.66	(H)
Carbon tetrachloride	0.10	(L)	0.10	(H)	0.10	(H)	0.15	(L)	0.13	(L)
1,2-Dichloropropane	<0.04		<0.04		<0.04		<0.04		<0.04	
Bromodichloromethane	<0.001		<0.001		<0.001		<0.001		<0.001	
Trichloroethylene	0.02	(L)	0.01	(L)	<0.004		0.11	(L)	0.09	(L)
cis-1,3-Dichloropropylene	<0.04		<0.04		<0.04		<0.04		<0.04	
trans-1,3-Dichloropropylene	<0.04		<0.04		<0.04		<0.04		<0.04	
1,1,2-Trichloroethane	<0.04		<0.04		<0.04		<0.04		<0.04	
Toluene	0.97	(H)	0.17	(M)	0.19	(H)	1.87	(H)	1.40	(H)
Dibromochloromethane	<0.001		<0.001		<0.001		<0.001		<0.001	
n-Octane	<0.03		<0.03		<0.03		<0.03		<0.03	
Tetrachloroethylene	0.09	(H)	0.01	(L)	0.01	(L)	0.30	(H)	0.25	(H)
Chlorobenzene	<0.02		<0.02		<0.02		<0.02		0.04	(M)
Ethylbenzene	0.12	(L)	0.02	(L)	0.02	(L)	0.34	(H)	0.22	(H)
m/p-Xylene/Bromoform	0.59	(L)	0.10	(L)	0.11	(L)	1.47	(L)	1.06	(L)
Styrene	0.08	(L)	0.02	(L)	0.02	(L)	0.22	(H)	0.18	(H)
o-Xylene/1,1,2,2-Tetrachloroethane	0.33	(L)	0.07	(L)	0.07	(L)	0.60	(M)	0.54	(L)
m-Dichlorobenzene	<0.02		<0.02		<0.02		0.11	(L)	0.08	(H)
p-Dichlorobenzene	<0.09		<0.09		<0.09		0.09	(L)	0.06	(H)
o-Dichlorobenzene	<0.02		<0.02		<0.02		0.33	(H)	0.18	(L)

(H) High confidence level (M) Medium confidence level (L) Low confidence level (Continued)
D Duplicate sample

TABLE H-3. B3AL (Continued)

Sample Date	8/31/92		9/02/92		9/08/92		9/25/92		9/29/92	
Sample ID	2132R		2258		2253		2530		2625	
Compound	Concentration, ppbv									
Acetylene	<1.00		<1.00		<1.00		<1.00		<1.00	
Propylene	2.23	(H)	1.72	(H)	1.35	(M)	0.34	(H)	0.67	(H)
Chloromethane	<0.20		0.78	(L)	0.65	(L)	0.22	(L)	0.54	(L)
Vinyl Chloride	<0.20		<0.20		<0.20		<0.20		<0.20	
1,3-Butadiene	<0.10		<0.10		<0.10		<0.10		<0.10	
Bromomethane	<0.20		<0.20		<0.20		<0.20		<0.20	
Chloroethane	<0.10		<0.10		<0.10		<0.10		<0.10	
Methylene Chloride	<0.11		<0.11		<0.11		<0.11		3.79	(H)
trans-1,2-Dichloroethylene	<0.04		<0.04		<0.04		<0.04		<0.04	
1,1-Dichloroethane	0.34	(L)	0.38	(L)	<0.04		<0.04		<0.04	
Chloroprene	<0.06		<0.06		<0.06		<0.06		<0.06	
Bromochloromethane	<0.003		<0.003		<0.003		<0.003		<0.003	
Chloroform	0.20	(L)	0.16	(L)	0.16	(L)	0.04	(L)	0.08	(L)
1,2-Dichloroethane	0.97	(L)	<0.04		<0.04		<0.04		<0.04	
1,1,1-Trichloroethane	1.21	(L)	0.87	(L)	0.98	(L)	0.34	(L)	0.55	(L)
Benzene	0.75	(H)	0.61	(H)	0.66	(H)	0.15	(H)	0.46	(H)
Carbon tetrachloride	0.14	(L)	0.11	(L)	0.11	(M)	0.10	(H)	0.12	(L)
1,2-Dichloropropane	<0.04		<0.04		<0.04		<0.04		<0.04	
Bromodichloromethane	<0.001		<0.001		<0.001		<0.001		<0.001	
Trichloroethylene	0.07	(L)	0.04	(L)	0.03	(L)	<0.004		0.04	(L)
cis-1,3-Dichloropropylene	<0.04		<0.04		<0.04		<0.04		<0.04	
trans-1,3-Dichloropropylene	<0.04		<0.04		<0.04		<0.04		<0.04	
1,1,2-Trichloroethane	<0.04		<0.04		<0.04		<0.04		<0.04	
Toluene	1.76	(H)	1.47	(H)	1.12	(H)	0.19	(H)	0.95	(H)
Dibromochloromethane	<0.001		<0.001		<0.001		<0.001		<0.001	
n-Octane	<0.03		<0.03		<0.03		<0.03		<0.03	
Tetrachloroethylene	0.26	(H)	0.10	(L)	0.29	(H)	0.01	(L)	0.04	(L)
Chlorobenzene	<0.02		<0.02		<0.02		<0.02		<0.02	
Ethylbenzene	0.30	(H)	0.14	(H)	0.15	(H)	0.03	(L)	0.09	(M)
m/p-Xylene/Bromoform	1.35	(L)	0.86	(L)	0.76	(L)	0.11	(L)	0.42	(L)
Styrene	0.18	(M)	0.13	(L)	0.14	(L)	0.02	(L)	0.07	(L)
o-Xylene/1,1,2,2-Tetrachloroethane	0.52	(L)	0.44	(L)	0.40	(L)	0.07	(L)	0.19	(L)
m-Dichlorobenzene	0.05	(L)	<0.02		<0.02		<0.02		0.08	(L)
p-Dichlorobenzene	0.05	(L)	<0.09		0.02	(L)	<0.09		0.04	(L)
o-Dichlorobenzene	0.06	(L)	<0.02		0.22	(L)	<0.02		0.07	(L)

(H) High confidence level (M) Medium confidence level (L) Low confidence level
R Replicate analysis

TABLE H-4. MULTIPLE DETECTOR SPECIATED UATMP DATA SUMMARY FOR NWNJ

Sample Date	7/21/92		7/27/92		7/31/92		8/26/92		8/26/92	
Sample ID	1404		1494		1569		2063D		2070D	
Compound	Concentration, ppbv									
Acetylene	<1.00		<1.00		<1.00		<1.00		<1.00	
Propylene	2.85	(H)	3.09	(H)	2.12	(H)	2.12	(H)	2.29	(H)
Chloromethane	0.73	(L)	0.90	(L)	<0.20		0.92	(L)	1.17	(L)
Vinyl Chloride	<0.20		<0.20		<0.20		<0.20		<0.20	
1,3-Butadiene	<0.10		<0.10		<0.10		<0.10		<0.10	
Bromomethane	<0.20		<0.20		<0.20		<0.20		<0.20	
Chloroethane	<0.10		<0.10		<0.10		<0.10		<0.10	
Methylene Chloride	2.86	(H)	3.03	(M)	<0.11		<0.11		<0.11	
trans-1,2-Dichloroethylene	<0.04		0.38	(L)	<0.04		<0.04		<0.04	
1,1-Dichloroethane	0.42	(L)	<0.04		<0.04		<0.04		0.48	(L)
Chloroprene	<0.06		<0.06		<0.06		<0.06		<0.06	
Bromochloromethane	<0.003		<0.003		<0.003		<0.003		<0.003	
Chloroform	0.20	(L)	0.20	(L)	0.19	(L)	0.38	(L)	0.38	(L)
1,2-Dichloroethane	1.33	(H)	1.18	(L)	0.95	(L)	1.73	(L)	1.76	(L)
1,1,1-Trichloroethane	253.06	(L)	7.49	(L)	4.46	(H)	7.44	(L)	7.65	(M)
Benzene	0.87	(H)	0.92	(H)	0.82	(H)	1.32	(H)	1.37	(H)
Carbon tetrachloride	0.16	(M)	0.14	(L)	0.14	(L)	0.14	(L)	0.14	(L)
1,2-Dichloropropane	1.34	(L)	<0.04		<0.04		<0.04		<0.04	
Bromodichloromethane	<0.001		<0.001		<0.001		<0.001		<0.001	
Trichloroethylene	0.24	(L)	0.26	(L)	0.17	(L)	0.37	(L)	0.39	(L)
cis-1,3-Dichloropropylene	<0.04		<0.04		<0.04		<0.04		<0.04	
trans-1,3-Dichloropropylene	<0.04		<0.04		<0.04		<0.04		<0.04	
1,1,2-Trichloroethane	<0.04		<0.04		<0.04		<0.04		<0.04	
Toluene	2.70	(H)	3.24	(H)	3.14	(H)	5.64	(H)	6.01	(H)
Dibromochloromethane	<0.001		<0.001		<0.001		<0.001		<0.001	
n-Octane	<0.03		<0.03		<0.03		<0.03		<0.03	
Tetrachloroethylene	0.12	(L)	0.26	(L)	0.27	(L)	0.90	(L)	0.92	(L)
Chlorobenzene	<0.02		0.07	(M)	0.18	(H)	0.10	(M)	0.13	(H)
Ethylbenzene	0.45	(H)	0.48	(H)	0.48	(H)	0.92	(H)	0.97	(H)
m/p-Xylene/Bromoform	1.97	(L)	2.24	(L)	2.20	(L)	4.44	(L)	4.59	(L)
Styrene	0.26	(M)	0.24	(L)	0.48	(L)	0.74	(M)	0.47	(L)
o-Xylene/1,1,2,2-Tetrachloroethane	1.07	(L)	1.12	(L)	1.05	(H)	2.14	(L)	2.19	(L)
m-Dichlorobenzene	<0.02		<0.02		0.21	(H)	<0.02		<0.02	
p-Dichlorobenzene	<0.09		0.15	(L)	0.11	(L)	0.18	(L)	0.20	(L)
o-Dichlorobenzene	<0.02		0.17	(H)	<0.02		0.23	(L)	<0.02	

(H) High confidence level (M) Medium confidence level (L) Low confidence level (Continued)

D Duplicate sample

TABLE H-4. NWNJ (Continued)

Sample Date	9/03/92		9/10/92		9/10/92		9/10/92		9/28/92	
Sample ID	2239		2326D		2327D		2326R		2551	
Compound	Concentration, ppbv									
Acetylene	<1.00		<1.00		<1.00		<1.00		<1.00	
Propylene	1.30	(H)	3.21	(H)	3.25	(H)	3.13	(H)	3.60	(H)
Chloromethane	0.57	(L)	0.72	(L)	0.63	(L)	0.93	(L)	1.19	(L)
Vinyl Chloride	<0.20		<0.20		<0.20		<0.20		<0.20	
1,3-Butadiene	<0.10		<0.10		<0.10		<0.10		<0.10	
Bromomethane	<0.20		<0.20		<0.20		<0.20		<0.20	
Chloroethane	<0.10		<0.10		<0.10		<0.10		<0.10	
Methylene Chloride	<0.11		<0.11		<0.11		<0.11		<0.11	
trans-1,2-Dichloroethylene	<0.04		<0.04		<0.04		<0.04		0.12	(L)
1,1-Dichloroethane	0.27	(L)	<0.04		<0.04		0.31	(H)	<0.04	
Chloroprene	<0.06		<0.06		<0.06		<0.06		<0.06	
Bromochloromethane	<0.003		<0.003		<0.003		<0.003		<0.003	
Chloroform	0.17	(L)	0.15	(L)	0.15	(L)	0.13	(L)	0.37	(L)
1,2-Dichloroethane	<0.04		1.01	(L)	0.92	(L)	0.94	(L)	1.61	(L)
1,1,1-Trichloroethane	4.42	(M)	5.36	(M)	5.20	(M)	4.77	(L)	13.29	(M)
Benzene	0.75	(H)	0.96	(H)	0.93	(H)	0.72	(H)	1.14	(H)
Carbon tetrachloride	0.14	(L)	0.15	(L)	0.15	(L)	0.13	(L)	0.15	(M)
1,2-Dichloropropane	<0.04		<0.04		<0.04		<0.04		<0.04	
Bromodichloromethane	<0.001		<0.001		<0.001		<0.001		<0.001	
Trichloroethylene	0.10	(L)	0.20	(L)	1.98	(L)	0.18	(L)	0.36	(L)
cis-1,3-Dichloropropylene	<0.04		<0.04		<0.04		<0.04		<0.04	
trans-1,3-Dichloropropylene	<0.04		<0.04		<0.04		<0.04		<0.04	
1,1,2-Trichloroethane	<0.04		<0.04		<0.04		<0.04		<0.04	
Toluene	2.14	(H)	3.28	(H)	2.80	(H)	2.02	(H)	5.04	(H)
Dibromochloromethane	<0.001		<0.001		<0.001		<0.001		<0.001	
n-Octane	0.31	(L)	<0.03		<0.03		<0.03		<0.03	
Tetrachloroethylene	0.13	(L)	0.08	(L)	0.07	(L)	0.05	(L)	0.37	(L)
Chlorobenzene	0.08	(H)	0.14	(M)	0.13	(M)	0.10	(H)	0.07	(H)
Ethylbenzene	0.36	(H)	0.71	(H)	0.75	(H)	0.59	(H)	0.67	(H)
m/p-Xylene/Bromoform	1.77	(L)	3.75	(L)	3.86	(L)	3.08	(L)	3.22	(L)
Styrene	0.44	(M)	0.43	(L)	0.52	(L)	0.35	(L)	0.71	(H)
o-Xylene/1,1,2,2-Tetrachloroethane	0.90	(L)	1.59	(H)	1.56	(H)	1.40	(H)	1.55	(L)
m-Dichlorobenzene	<0.02		<0.02		<0.02		0.20	(L)	<0.02	
p-Dichlorobenzene	0.15	(L)	0.13	(L)	0.12	(L)	0.14	(L)	0.14	(L)
o-Dichlorobenzene	<0.02		0.22	(H)	0.22	(M)	0.15	(H)	0.20	(L)

(H) High confidence level (M) Medium confidence level (L) Low confidence level
R Replicate analysis D Duplicate sample

TABLE H-5. MULTIPLE DETECTOR SPECIATED UATMP DATA SUMMARY FOR PLNJ

Sample Date	8/14/92		8/14/92		8/14/92		8/25/92		8/26/92	
Sample ID	1922D		1923D		1923R		2071		2065	
Compound	Concentration, ppbv									
Acetylene	<1.00		<1.00		<1.00		<1.00		<1.00	
Propylene	0.98	(L)	1.68	(H)	1.47	(H)	7.89	(H)	4.85	(H)
Chloromethane	0.68	(L)	0.55	(L)	0.60	(L)	<0.20		1.02	(L)
Vinyl Chloride	<0.20		<0.20		<0.20		<0.20		<0.20	
1,3-Butadiene	<0.10		<0.10		<0.10		<0.10		0.11	(L)
Bromomethane	<0.20		<0.20		<0.20		<0.20		<0.20	
Chloroethane	<0.10		<0.10		<0.10		<0.10		<0.10	
Methylene Chloride	<0.11		<0.11		<0.11		<0.11		<0.11	
trans-1,2-Dichloroethylene	<0.04		<0.04		<0.04		<0.04		<0.04	
1,1-Dichloroethane	<0.04		<0.04		7.19	(L)	1.16	(L)	1.89	(L)
Chloroprene	<0.06		<0.06		<0.06		<0.06		<0.06	
Bromochloromethane	<0.003		<0.003		<0.003		<0.003		<0.003	
Chloroform	<0.006		0.12	(L)	0.14	(L)	0.33	(L)	0.76	(L)
1,2-Dichloroethane	<0.04		<0.04		<0.04		<0.04		3.40	(H)
1,1,1-Trichloroethane	1.06	(L)	1.20	(L)	1.14	(L)	3.49	(L)	4.67	(L)
Benzene	3.84	(M)	4.33	(M)	4.11	(H)	2.46	(H)	1.46	(H)
Carbon tetrachloride	0.12	(L)	0.13	(L)	0.14	(L)	0.14	(L)	0.28	(L)
1,2-Dichloropropane	<0.04		<0.04		<0.04		<0.04		<0.04	
Bromodichloromethane	<0.001		<0.001		<0.001		<0.001		<0.001	
Trichloroethylene	<0.004		0.08	(L)	0.08	(L)	0.09	(L)	0.40	(L)
cis-1,3-Dichloropropylene	<0.04		<0.04		<0.04		<0.04		<0.04	
trans-1,3-Dichloropropylene	<0.04		<0.04		<0.04		<0.04		<0.04	
1,1,2-Trichloroethane	<0.04		<0.04		<0.04		<0.04		<0.04	
Toluene	16.25	(M)	17.69	(L)	18.26	(H)	7.89	(M)	6.41	(M)
Dibromochloromethane	<0.001		<0.001		<0.001		<0.001		<0.001	
n-Octane	<0.03		<0.03		<0.03		<0.03		<0.03	
Tetrachloroethylene	0.57	(L)	0.60	(L)	0.58	(L)	0.33	(L)	0.14	(L)
Chlorobenzene	<0.02		<0.02		<0.02		0.11	(M)	0.12	(M)
Ethylbenzene	3.07	(H)	3.95	(L)	3.83	(H)	1.21	(H)	0.94	(H)
m/p-Xylene/Bromoform	16.41	(L)	20.79	(L)	20.46	(L)	5.79	(L)	4.89	(L)
Styrene	<0.02		<0.02		<0.02		0.39	(L)	0.81	(M)
o-Xylene/1,1,2,2-Tetrachloroethane	9.13	(L)	11.26	(L)	9.98	(L)	3.12	(L)	2.68	(L)
m-Dichlorobenzene	<0.02		<0.02		<0.02		<0.02		3.08	(L)
p-Dichlorobenzene	<0.09		<0.09		<0.09		0.36	(H)	0.18	(L)
o-Dichlorobenzene	<0.02		<0.02		<0.02		0.18	(H)	<0.02	

(H) High confidence level (M) Medium confidence level (L) Low confidence level (Continued)
R Replicate analysis D Duplicate sample

TABLE H-5. PLNJ (Continued)

Sample Date	9/04/92		9/14/92		9/21/92		9/24/92		9/28/92	
Sample ID	2269		2400		2513		2518		2569	
Compound	Concentration, ppbv									
Acetylene	<1.00		<1.00		<1.00		<1.00		<1.00	
Propylene	6.52	(H)	8.96	(H)	5.58	(H)	1.39	(H)	5.77	(H)
Chloromethane	0.64	(L)	0.54	(L)	0.56	(L)	0.51	(L)	<0.20	
Vinyl Chloride	<0.20		<0.20		<0.20		<0.20		<0.20	
1,3-Butadiene	<0.10		<0.10		<0.10		0.09	(L)	0.41	(L)
Bromomethane	<0.20		<0.20		<0.20		<0.20		<0.20	
Chloroethane	<0.10		<0.10		<0.10		<0.10		<0.10	
Methylene Chloride	<0.11		<0.11		<0.11		1.02	(L)	<0.11	
trans-1,2-Dichloroethylene	<0.04		<0.04		<0.04		<0.04		<0.04	
1,1-Dichloroethane	0.87	(L)	1.46	(L)	0.79	(L)	0.16	(L)	0.84	(L)
Chloroprene	<0.06		<0.06		<0.06		<0.06		<0.06	
Bromochloromethane	<0.003		<0.003		<0.003		<0.003		<0.003	
Chloroform	0.32	(L)	0.60	(L)	0.26	(L)	0.11	(L)	0.17	(L)
1,2-Dichloroethane	<0.04		5.23	(L)	<0.04		0.54	(L)	<0.04	
1,1,1-Trichloroethane	2.40	(L)	3.78	(L)	2.62	(L)	0.84	(L)	0.97	(L)
Benzene	2.40	(H)	3.19	(H)	1.83	(H)	0.60	(H)	2.21	(H)
Carbon tetrachloride	0.15	(L)	0.14	(L)	0.13	(L)	0.13	(L)	0.13	(L)
1,2-Dichloropropane	<0.04		<0.04		<0.04		<0.04		<0.04	
Bromodichloromethane	<0.001		<0.001		<0.001		<0.001		<0.001	
Trichloroethylene	0.19	(L)	0.58	(L)	0.15	(L)	0.05	(H)	0.07	(L)
cis-1,3-Dichloropropylene	<0.04		<0.04		<0.04		<0.04		<0.04	
trans-1,3-Dichloropropylene	<0.04		<0.04		<0.04		<0.04		<0.04	
1,1,2-Trichloroethane	<0.04		<0.04		<0.04		<0.04		<0.04	
Toluene	7.05	(M)	9.59	(H)	4.79	(H)	1.50	(M)	5.03	(H)
Dibromochloromethane	<0.001		<0.001		<0.001		<0.001		<0.001	
n-Octane	<0.03		<0.03		<0.03		<0.03		<0.03	
Tetrachloroethylene	0.33	(L)	0.45	(L)	0.20	(L)	0.14	(L)	0.33	(L)
Chlorobenzene	0.52	(H)	<0.02		0.09	(H)	0.05	(M)	0.08	(H)
Ethylbenzene	1.12	(H)	1.58	(H)	0.85	(H)	0.22	(H)	0.97	(H)
m/p-Xylene/Bromoform	5.52	(L)	7.72	(L)	4.06	(L)	1.20	(L)	5.04	(L)
Styrene	0.35	(M)	0.50	(L)	0.25	(L)	0.19	(H)	0.37	(L)
o-Xylene/1,1,2,2-Tetrachloroethane	2.87	(L)	4.32	(L)	2.16	(L)	0.61	(L)	2.60	(L)
m-Dichlorobenzene	<0.02		<0.02		<0.02		<0.02		<0.02	
p-Dichlorobenzene	0.25	(H)	<0.09		0.20	(H)	0.09	(L)	0.25	(H)
o-Dichlorobenzene	<0.02		<0.02		0.13	(H)	0.21	(H)	0.13	(H)

(H) High confidence level (M) Medium confidence level (L) Low confidence level

APPENDIX I

EXTERNAL AUDIT RESULTS LETTERS

UNITED STATES ENVIRONMENTAL PROTECTION AGENCY
ATMOSPHERIC RESEARCH AND EXPOSURE ASSESSMENT LABORATORY
RESEARCH TRIANGLE PARK
NORTH CAROLINA 27711

December 14, 1992

MEMORANDUM

SUBJECT: Propane and Hydrocarbon Analysis Program

FROM: Howard L. Crist HC
QASB/QATSD/AREAL (MD-77B)

TO: Neil J.Berg, Jr.
OAQPS (MD-14)

The results of the VOCs analyses by Radian Corporation of audit canisters provided by our contractor (ManTech) is attached. The overall identification and quantification of the unknowns was excellent.

cc: Phyllis O'Hara - Radian Corporation
Terri Sampson - Radian Corporation
William J. Mitchell (MD-77B)

Propane Audit Canister Results

PPMC

Audit #	Spiked	Reported	Difference, %
2186	1.97	1.92	-2.5
2267	0.45	0.55	22
2402	0.45	0.46	2.2
2474	1.98	1.94	-2.0

Hydrocarbon Program
Audit Canister Results

Audit # 2185 ppbv

	Spiked	Reported	Difference, %
Ethane	18.9	15.1	-20
Propane	20.5	12.6	-39
Isobutane	20.4	18.4	-9.8
n-Butane	20.9	19.4	-7.2
Isopentane	20.3	19.6	-3.4
n-Pentane	20.4	19.8	-2.9
3-Methylpentane	20.0	19.4	-3.0
n-Hexane	20.0	19.4	-3.0
Benzene	20.7	19.8	-4.3
n-Heptne	20.0	19.7	-1.5
Toluene	19.9	19.3	-3.0
n-Octane	19.8	19.3	-2.5
o-Xylene	19.3	17.8	-7.8

Hydrocarbon Program
Audit Canister Results

Audit # 2403

	Spiked	Reported	Difference, %
Isopentane	5.0	5.2	4.0
3-methylpentane	4.8	5.0	4.2
Benzene	5.0	5.5	10
Toluene	4.7	5.3	13
m-Xylene	5.0	9.3[a]	-3.1[a]
p-Xylene	4.6	-	-
o-Xylene	4.9	4.5	-8.2

(a) m,p-Xylenes combined

Hydrocarbon Program
Audit Canister Results

Audit # 2580

	Spiked	Reported	Difference, %
Isobutane	5.0	4.6	-8.0
n-Butane	5.2	4.7	-9.6
Isopentane	4.6	4.9	6.5
n-Pentane	5.0	4.6	-8.0
n-Hexane	5.0	4.7	-6.0
n-Heptane	4.8	4.6	-4.2
n-Octane	4.3	4.0	-7.0

MANTECH

To: Phyllis O'Hara
From: Ron Bousquet
Subject: Audit Results
Date: January 13, 1992

Here is the information you requested concerning the NMOC audit results.

	Spiked Value	Analytical Value	Analytical Bias
Audit # 2186	1.97 ppmC	1.91 ppmC	- 3.0 %
Audit # 2267	0.45 ppmC	0.45 ppmC	0.0 %
Audit # 2402	0.45 ppmC	0.52 ppmC	+ 16%
Audit # 2474	1.98 ppmC	1.90 ppmC	- 4.0 %
Audit # 2185			
Methane	1470	*	NA
Ethane	18.9	*	NA
Propane	20.5	*	NA
i-Butane	20.4	*	NA
n-Butane	20.9	*	NA
i-Pentane	20.3	21.6	+ 6.4 %
n-Pentane	20.4	*	NA
3-Methylpentane	20.0	19.0	- 5.0 %
n-Hexane	20.0	*	NA
Benzene	20.7	18.6	- 10 %
n-Heptane	20.0	*	NA
n-Octane	19.8	*	NA
Toluene	19.9	17.4	- 13 %
o-Xylene	19.3	18.7	-3.1 %

All concentrations = ppb.
* = Not Analyzed
NA = Not Applicable

ManTech Environmental Technology, Inc.

P.O. Box 12313, 2 Triangle Drive, Research Triangle Park, North Carolina 27709 919-549-0611 FAX 919-549-4665

Audit # 2403

	Spiked Value	Analytical Value	Analytical Bias
i-Pentane	5.0	5.0	0.0 %
Methylpentane	4.8	4.9	+ 2.1 %
Benzene	5.0	5.8	+ 16 %
Toluene	4.7	6.5	+ 38 %
m-Xylene	5.0	4.6	- 8.0 %
p-Xylene	4.6	4.5	- 2.2 %
o-Xylene	4.9	4.9	0.0 %

The zero air analysis performed during this run of samples contained 0.6 ppb Benzene and 1.2 ppb Toluene.

Audit # 2380

Methane	1377	*	NA
i-Butane	5	5.0	NA
n-Butane	5	5.2	NA
i-Pentane	5	4.6	NA
n-Pentane	5	5.0	NA
n-Hexane	5	5.0	NA
n-Heptane	5	4.8	NA
n-Octane	5	4.3	NA

All concentrations nominally 5 ppb except methane which is 1377 ppb.
* = Not analyzed
NA = Not Applicable

UNITED STATES ENVIRONMENTAL PROTECTION AGENCY
ATMOSPHERIC RESEARCH AND EXPOSURE ASSESSMENT LABORATORY
RESEARCH TRIANGLE PARK
NORTH CAROLINA 27711

Mail Drop 84
Phone: (919) 541-2829

January 5, 1993

Ms. Terri Sampson
Radian Corporation
3200 E. Chapel Hill Blvd.
P. O. Box 13000
RTP, NC 27709

Dear Terri:

I have completed the analysis of the 10 canister samples delivered to us in November 1992. The results for 52 hydrocarbon compounds along with total nonmethane organic carbon (NMOC) are provided in Table 1. The compounds included were not selected from any basic criteria except to represent typical paraffinic, olefinic, and aromatic compounds found in ambient air. TNMOC represents the sum of all gc peaks including both identified and unidentified compounds. Atypical compound compositions were observed in a few of the samples. Sample P-090 contained an extremely large propane peak that contributed about 65% to the TNMOC. Sample 2453 has a 1,2,4-trimethyl benzene peak that is about a factor of five higher than expected based upon other aromatic hydrocarbons. In sample 2435 a peak identified as methyl tertiary butyl ether (MTBE) was observed at a concentration of 74 ppbC. The n-pentane peak in samples P-090 and 2622 was severely overlapped by a near co-eluting tailing peak. Consequently the n-pentane concentrations provided in Tables 1 for these two samples must be considered as estimates.

If you prefer, I can provide print files of all gc peaks measured in the 10 samples. Look over the Table and contact me if you have any questions.

Sincerely yours,

Bill Lonneman

William A. Lonneman
Research Chemist
Gas Kinetics & Photochemistry Research Branch

cc: N. Berg

TABLE 1 SELECTED HYDROCARBON COMPOUNDS FROM THE ANALYSIS OF 1992 RADIAN SAMPLE CANISTERS, ppbC

	B3AL 2154	EPTX ~~2538~~ 2553	FWTX 2581	B1AL 2141	NWYK P-090	B2AL 2190	CHNC 2453	DLTX 2314	JUMX 2622	BMTX 2435
170.68 Ethylene	10.19	54.96	14.73	9.83	8.18	10.10	21.89	9.57	25.54	2.63
185.71 Acetylene	7.31	64.43	12.54	4.95	4.02	8.49	10.94	8.10	27.16	1.83
200.00 Ethane	7.49	48.37	22.10	8.69	7.32	4.43	6.46	14.64	29.30	8.39
289.25 Propene	4.69	24.41	6.59	3.16	56.74	4.55	5.38	4.19	11.57	1.45
300.00 Propane	6.38	91.64	19.56	13.63	828.27	11.24	11.61	17.72	48.66	11.94
361.54 isoButane	5.85	32.86	7.06	1.81	24.79	1.28	5.77	5.45	12.51	10.27
389.85 1-Butene	4.07	21.78	3.91	1.94	3.21	2.79	3.73	2.56	6.48	2.15
396.96 1,3-Butadiene	0.85	3.72	1.50	0.58	0.51	1.14	1.23	0.90	2.26	0.24
400.00 n-Butane	22.52	69.21	19.95	3.56	9.37	3.72	11.12	10.67	28.15	22.90
411.62 t-2-Butene	1.56	10.85	1.41	0.41	0.66	0.74	1.15	0.47	0.35	1.17
425.95 c-2-Butene	1.74	7.63	0.91	0.33	0.51	0.35	0.78	0.36	1.17	1.66
457.32 3-Methyl-1-Butene	0.86	2.40	0.79	0.14	0.22	0.27	0.54	0.34	0.64	1.16
474.58 isoPentane	52.21	117.70	39.05	7.87	10.39	11.99	26.16	19.06	34.29	36.60
489.27 1-Pentene	1.97	5.71	1.73	0.29	0.51	0.54	1.25	0.74	1.55	1.70
496.14 2-Methyl-1-Butene	3.56	4.49	2.62	0.45	0.73	0.98	2.28	1.34	3.05	2.82
500.00 n-Pentane	16.94	72.77	14.92	3.63	17.09	4.83	9.48	8.44	39.27	14.03
508.69 t-2-Pentene	4.64	8.94	2.77	0.64	0.51	1.19	3.21	1.99	2.96	3.18
516.28 c-2-Pentene	2.29	4.88	1.50	0.37	0.35	0.67	1.49	0.86	1.66	1.62
520.92 2-Methyl-2-Butene	5.25	1.08	3.21	0.83	0.78	1.60	3.69	2.16	4.16	4.07
551.41 Cyclopentene	0.58	1.13	0.52	0.16	0.15	0.24	0.66	0.33	0.67	0.39
561.99 Cyclopentane	1.32	6.90	1.71	0.39	0.51	0.44	0.96	1.02	2.43	2.13
565.11 2,3-DiMethylButane	3.65	11.53	3.96	1.19	0.87	1.33	3.02	2.11	5.18	2.31
570.12 2-MethylPentane	11.88	35.68	11.01	2.92	3.13	3.99	8.23	6.54	14.58	11.83
583.42 3-MethylPentane	8.35	24.48	8.06	3.27	2.88	3.36	6.16	5.02	9.33	6.85
588.35 2-Methyl-1-Pentene	1.50	1.03	0.72	0.28	4.63	0.27	0.71	0.90	0.88	0.18
600.00 n-Hexane	5.44	30.97	6.37	2.09	2.68	2.33	4.93	4.40	13.08	6.08
~~602.24 t-3-Hexene~~	~~0.68~~	~~1.62~~	~~0.60~~	~~0.22~~	~~0.35~~	~~0.34~~	~~0.64~~	~~0.47~~	~~0.48~~	~~0.39~~
604.89 t-2-Hexene	0.80	2.47	0.77	0.28	0.40	0.42	0.71	0.66	1.06	0.45
626.70 MethylCycloPentane	3.50	21.04	3.85	1.28	1.26	1.47	2.94	2.59	7.29	3.34
631.15 2,4-DiMethylPentane	1.99	12.30	2.53	1.13	0.89	1.31	2.59	1.79	6.33	1.46
650.92 Benzene	7.98	37.19	8.97	15.99	4.27	6.02	8.89	6.01	18.43	3.69
660.11 CycloHexane	0.93	9.54	0.51	0.29	0.55	0.26	0.41	0.91	3.37	1.66
668.68 2-MethylHexane	2.17	12.40	3.72	1.12	1.44	1.49	3.00	2.24	5.85	2.14
670.58 2,3-DiMethylPentane	2.82	25.16	2.49	1.42	1.65	1.70	3.30	1.77	12.40	1.76
677.21 3-MethylHexane	3.51	13.71	4.79	2.42	3.11	2.49	4.24	4.43	7.68	3.34
690.57 2,2,4-TriMethylPentane	7.24	29.74	11.71	3.25	0.10	4.08	9.14	5.00	14.42	4.20
700.00 n-Heptane	1.65	11.18	2.54	0.30	1.43	0.83	2.34	1.92	5.44	2.01
723.45 MethylCycloHexane	1.66	8.53	2.55	1.09	2.25	1.06	2.03	2.37	3.65	2.54
753.41 2,3,4-TriMethylPentane	2.16	10.36	3.74	1.07	0.80	1.32	2.85	1.84	5.16	1.11
758.76 Toluene	19.09	82.82	26.71	11.32	9.92	10.66	24.20	16.33	65.19	6.69
767.53 2-MethylHeptane	0.88	5.42	1.47	0.57	0.77	0.59	0.98	0.95	2.34	0.74
775.20 3-MethylHeptane	0.87	5.90	1.67	0.49	0.64	0.63	1.16	0.99	2.79	0.66
800.00 n-Octane	0.57	6.36	1.34	0.64	1.05	0.52	1.03	1.01	2.80	0.90
854.84 EthylBenzene	3.14	16.63	4.88	1.73	2.20	2.22	3.99	2.89	14.18	1.83
863.55 m-&p-Xylene	9.99	45.58	16.23	6.17	6.59	6.79	12.75	8.81	49.22	4.37
881.29 Styrene	1.79	4.08	1.99	1.67	1.97	1.57	3.15	3.12	6.35	1.34
886.99 o-Xylene	3.84	16.64	6.07	2.33	6.24	2.80	5.20	3.66	15.90	1.70
900.00 n-Nonane	0.49	4.65	0.86	0.49	1.29	0.38	0.76	0.80	2.44	0.50
964.39 1,3,5-TriMethylBenzene	1.43	6.23	2.53	0.10	0.89	1.51	0.46	1.75	0.55	0.10
991.00 1,2,4-TriMethylBenzene	6.95	19.39	8.93	7.14	4.67	7.17	46.11	8.21	21.73	9.40
1000.00 n-Decane	0.87	5.56	1.29	0.58	1.58	0.86	1.16	1.03	3.27	0.88
1020.93 1,2,3-TriMethylBenzene	1.78	5.08	2.12	0.81	1.20	1.34	3.07	1.46	3.06	0.87
TNMOC	436.66	1496.18	458.13	238.88	1300.60	248.52	507.51	365.00	877.33	419.28

MEMORANDUM

TO: Bill Lonneman

FROM: Terri Sampson

COPY: Distribution

DATE: February 15, 1993

SUBJECT: Canister Confirmation Analysis

This is some information for the 10 canisters to be used for hydrocarbon analysis comparisons by your lab. The first 9 samples were through the NMOC/Speciated Hydrocarbon Program, the last sample is a New York sample from the PAMS program containing high fluorocarbon contamination.

Site Code	Sample Date	Radian ID	Can #
DLTX	9-10-92	2314	767
FWTX	9-30-92	2581	908
EPTX	9-30-92	2583	552(stamped on bottom rim)
B1AL	8-28-92	2141	663
B3AL	9-01-92	2154	140
BMTX	9-21-92	2435	678
CHNC	9-22-92	2453	077
B2AL	9-01-92	2190	810
JUMX	9-28-92	2622	623
NWYK	9-27-92	P090	A103086(Bar code ID)

Let me know if you need any further information.

Distribution

Neil Berg (EPA)
Phyllis O'Hara
Ray Merrill
Joann Rice

APPENDIX J

SPECIATED NMOC ANALYSIS METHOD

06 MAR 1991

RESEARCH PROTOCOL METHOD FOR ANALYSIS OF C_2-C_{12} HYDROCARBONS IN AMBIENT AIR BY GAS CHROMATOGRAPHY WITH CRYOGENIC CONCENTRATION

Prepared by

Robert L. Seila
U.S. Environmental Protection Agency
Research Triangle Park, North Carolina 27711

and

Donald A. Cox
Quality Assurance Data Services, Inc.
Boone, North Carolina 26807

Prepared for

U.S. Environmental Protection Agency
Atmospheric Chemistry and Physics Division
Atmospheric Sciences Research Laboratory
Research Triangle Park, North Carolina 27711

SEPTEMBER 1988

RESEARCH PROTOCOL METHOD FOR ANALYSIS OF C_2-C_{12} HYDROCARBONS IN AMBIENT AIR BY GAS CHROMATOGRAPHY WITH CRYOGENIC CONCENTRATION

Approvals

Robert L. Seila — 11/5/88
Robert L. Seila — Date
Author - User

William A. Lonneman — 11/15/88
William A. Lonneman — Date
Author - User

Ronald K. Patterson — 11/16/88
Ronald K. Patterson — Date
ASRL QA Officer

DISCLAIMER

The Research Protocol/Method (RPM) described herein should not be interpreted as a generally accepted standard or equivalent method or procedure. This RPM was developed for use within the Atmospheric Sciences Research Laboratory of EPA and may not be applicable to the needs of other organizations.

1.0 SCOPE AND APPLICATION

This recommended method is intended for analysis of C_2-C_{12} hydrocarbons (HC) in ambient air. The method's minimum quantification limit (MQL) is 0.12 ppb carbon; the method's minimum detection limit (MDL) is 0.04 ppb carbon. The MQL and MDL were determined by the method described by Knoll (reference 1).

2.0 SUMMARY OF METHOD

A known volume of gaseous sample is passed through a cryogenicaly cooled trap, cooled with liquid oxygen or liquid argon, cryogenicaly cooling traps out C_2 and heavier hydrocarbons without trapping methane. The trap containing the condensed HC's is warmed with hot water and its contents injected into a gas chromatograph (GC) capillary column where separation of the C_2-C_{12} hydrocarbons takes place. Detection of the hydrocarbon is by flame-ionization detector (FID), and the resultant peaks are quantified and recorded by an electronic integrator.

3.0 DEFINITIONS

3.1 Accuracy - The degree of agreement of the measurements with the true value of the propane Standard Reference Material (SRM) measured.

3.2 Precision - The repeatability of propane measurements from the same canister under essentially the same conditions.

4.0 INTERFERENCES

Any hydrocarbon compound that elutes with the same retention times as any of the C_2-C_{12} hydrocarbons and responds to flame ionization detection will interfere in this method.

5.0 PERSONNEL REQUIREMENTS

The researcher using this procedure is expected to be familiar with gas chromatographic practices and able to operated the instrument following the manufacturer's manual. Operator requirements will include daily startup procedures, instrument sensitivity adjustment, maintenance schedules, and other manufacturer's recommendations.

6.0 FACILITIES REQUIREMENTS

No special laboratory facilities are required.

7.0 SAFETY REQUIREMENTS

The calibration standards, collected sample, and most laboratory reagents used in this method pose no hazard to the researcher if normal laboratory safety practices are followed. Eye and hand protection are required when using liquid nitrogen and argon or other cryogens. Combustion is possible when using liquid oxygen, and its contact with all flammable materials must be avoided. In addition, electrical connections can also pose a hazard.

The American Chemical Society (ACS) guideline regarding the safe handling of chemicals used in this method is required.

7.1 EPA Safety Regulations

Information on EPA Safety Regulations are included in text.

7.2 Vacuum Systems

See page G9 of the EPA/RTP Safety Manual (ref. 2) for precautions.

7.3 Heated Surfaces

The GC injection ports, column, column oven, and detectors are maintained at temperatures high enough to cause burns. The researcher should exercise caution to avoid contact with these surfaces.

7.4 Immersion Heater

WARNING - The immersion heater must always be immersed in water, otherwise very high temperatures to be reached with the possible ignition of combustible materials and reduction of the operating life.

7.5 Compressed Gases

See pages F14 through F18 of the EPA/RTP Safety Manual (ref. 2) for safety precautions. The following are specific safety requirements for this method.

7.5.1 Hydrogen

Hydrogen gas cylinders used for FID fuel are not permitted in the RTP Tech Center. Hydrogen cylinders and their regulator must be secured outside the building, and a stainless steel pressure line run into the laboratory.

7.5.2 Cryogenic Liquids

See pages F18 through F20 of the EPA/RTP Safety Manual (reference 2) for precautions.

7.5.2.1 Liquid Oxygen (if used)

WARNING - Strong oxidant. Vigorously promotes combustion. Avoid contact with all flammable materials. Containers, lines, valves, and vents must be free of oil and grease. May cause severe frostbite. Wear eye and hand protection.

7.5.2.2 Liquid Nitrogen and Liquid Argon (if used)

WARNING - Cryogenic fluid. May cause severe frostbite. Wear eye and hand protection. Use with adequate room ventilation. Keep contact with air to a minimum to avoid buildup of liquid oxygen (see above).

8.0 APPARATUS AND EQUIPMENT

This section describes the instrument requirements for this method.

8.1 Gas Chromatograph

The gas chromatograph is equipped with a temperature programmed oven that holds the separation column, flame-ionization detector (FID), and electronic integrator. This method uses an HP 5880A Gas Chromatograph with the following specifications:

8.1.1 Gas Chromatograph Column

Type: fused silica capillary column.

Diameter: 0.32 mm ID.

Length: 60 m.

Liquid Phase: DB-1 bonded liquid phase (J&W Scientific Inc., Folsom, Calif.)

Liquid Phase Thickness: 1.0 um.

8.1.2 Inlet System

The inlet system is illustrated in Figure 1. The automatic six-port gas sampling valves (V4 and V5, Figure 1) are located on an aluminum block which is temperature regulated. All other valves are at ambient temperature.

8.1.2.1 Connection of Inlet System to Column

A 5" length of 1/4in. x 0.75 mm OD glass tube (Supelco,Inc.) is used to connect the gas sampling valve to the column. At the value end of the glass tube, there is a 1/4-in to 1/16-in Swagelok™ SS reducing union; at the column end is a 1/4-in to 1/16-in specially modified reducing union (Supelco, Inc.). Graphite/Vespel ferrules are used.

8.1.3 Trap

The sampling trap is constructed of clean, chromatographic grade, 3.2 mm (1/8 in) OD stainless steel tubing, 16 cm in length, which is bent into a U-shape approximately 7 cm from each end so that the U is approximately 2.2 cm in width. Clean, untreated 60/80 mesh glass beads are poured in the U tube to a height of approximately 3 cm. Silanized glass wool is used as a plug to the last cm of both ends. 1/16"-1/8" unions are added to each end for connection to the gas sampling valve.

8.2 Mass Flow Meter

A thermal conductivity mass flow meter (M1, Figure 2) (TYLAN Corp., model FM 360, 0 to 500 standard cm3/min or equivalent) is used to measure the flow rate through the cryogenic trap. See the following ASRL-ACPD-RPM-??? for mass flow meter operation instructions.

8.3 Pressure Gauge

A precision Bourdon gauge (P1, Figure 1), with a range of 0 to 200 Torr (absolute), is used. A gauge with a range of 0 to 400 Torr is also acceptable.

8.4 Vacuum Pump

An oil-less diaphragm pump (such as Thomas model 2106CA13-515-2) is used to evacuate the inlet system.

CAUTION: Due to the possibility of contamination, oil-sealed vacuum pumps should not be used.

8.5 Tubing and Connectors

All tubing is chromatographic grade stainless steel. All connections are stainless steel compression tube fittings (Swagelok™ or equivalent).

8.6 Regulators for compressed gases

Carrier gas, hydrogen, and air delivery pressures are controlled by two-stage regulators mounted at the tank.

NOTE: The H_2 regulator is outside of the building at RTP. Other gases have regulators on the inside line.

CAUTION: Due to the possibility of contamination by organic materials, only regulators with stainless-steel diaphragms should be used.

8.7 Immersion Heater

An immersion heater is used to heat a water bath that heats the trap, volatilizing the cryogenically trapped gases.

9.0 REAGENTS/MATERIALS

All gases used to operate the GC system are high quality grade and may vary in specifications with manufacture. Instrument calibration gases are obtained from the National Bureau of Standards (NBS) and are referred to as Standard Reference Materials (SRM). Use of reagent grade chemicals for all dilutions and standards materials is recommended.

9.1 Gases and Cryogens

The following is recommend for use with this method.

9.1.1 Helium Carrier Gas

High purity, minimum purity of 99.995 percent helium carrier gas is best, Bureau of Mines.

9.1.2 Detector Air

Linde zero grade with total hydrocarbons <1 ppm, or equivalent.

9.1.3 Detector Hydrogen

Prepurified grade 99.99 percent pure or equivalent.

9.1.4 Detector Makeup Nitrogen

Prepurified grade 99.99 percent pure (or equivalent).

9.1.5 Liquid Nitrogen (for GC oven cooling)

Commercial grade acceptable.

9.1.6 Liquid Oxygen (for trap cooling)

Commercial grade acceptable.

9.1.7 Liquid Argon (for trap cooling)

Liquid argon may be used instead of liquid oxygen for trap cooling. Although liquid argon is more expensive, it is inert, and its use eliminates the oxidant hazard associated with liquid oxygen. Commercial grade is acceptable.

9.1.8 Propane in Air (for calibration)

NBS SRM 1665, 3 ppm (nominal) propane in air.

9.1.9 Instrument Air Vacuum

The six-port gas sampling valves require clean filtered air at 350 kPa (35 psig) and a vacuum of approximately 20 in Hg for operation.

10.0 SAMPLE/SAMPLING PROCEDURE

This RPM is generally limited to the laboratory analysis but could also be used for field analysis. Field sampling and canister preparation procedures are covered separately (See reference 3.). Canister containing the sample are connected into the system as shown in Figure 1.

11.0 CALIBRATION AND STANDARDIZATION

11.1 Mass Flow Meter Calibration

For calibration see ASRL-ACPD-RPM XXX

11.2 Pressure Gauge Calibration

For calibration see ASRL-ACPD-RPM XXX

11.3 Gas Chromatograph Calibration

To perform a calibration in the parts per billion carbon (ppbC) range, the following procedure is utilized:

11.3.1 Instrument Optimization

A propane in air sample should be first analyzed and adjustments made to the carrier gas linear velocity such that the propane peak elutes at 3.105 min (3 min 6 sec) following injection. Using the capillary column and temperatures specified in this document, these C_2-C_{12} HC compounds should elute in the order of the retention times

given in Table 1. (This assumes that the carrier gas flow rate is pressure controlled). The actual eluting times should be determined by preparing and analyzing known samples of each compound and depends upon column length , carrier flow rate, column temperature, etc.

The flame-ionization detector and air flow rates are adjusted according to the manufacturer specifications for proper operation and optimum signal to noise ratio. These flow-rates for the HP5880 are 30 cm^3/min for hydrogen and 400 cm^3/min for air.

11.3.2 Calibration Using Propane

The response of the FID is assumed to be linear with respect to the number of carbon atoms present in the detected compound (reference 3). Thus, it is convenient to measure compound peak concentration (conc.) in terms of parts-per-billion-carbon (ppbC) where

Conc.,ppbC = (number of carbon atoms in compound)(Conc.,ppb)

For a fixed sample volume, the concentration is proportional to the area under the chromatographic peak. The area under the chromatographic peak is converted to ppbc concentrations by the integrator by the following calculation.

$$\text{Conc., ppbC} = (k)(\text{Area})$$

Area is given in integrator counts and k is an experimentally determined calibration constant (ppbC/count). The same value of k is used for all compounds. The calibration constant k is determined by analysis of an NBS SRM propane in air standard. The value of k is then given by:

$$k(\text{ppbC/count}) = \frac{3(\text{Conc.NBS Standard Propane,ppm})(1000\ \text{ppbC/ppmC})}{\text{Median Area Count}}$$

Three to five concentration levels of the standard are needed to generate a suitable calibration curve. Two to three repeated sample injections per calibration level are made. Averaged values of K are calculated and recorded in the laboratory notebook, and the mean or median value taken. Example are given in Exhibit 1. below.

EXHIBIT 1. LABORATORY NOTEBOOK RECORD

Calibration of the HP-5880A GC equipped with J&W DB-1 fused silica column

Propane SRM: 2.83 ± 0.03 umole/mole(ppm)
8490 ppb as carbon

Cylinder Number : FF18831, Sample Number 85-51-E

Sample	Volume cm^3	Equivalent Propane Conc. (ppbC)	Area of Propane Peak	Response Factor Conc/Area
1a	420	8490	28014.4	0.303058
1b	420	8490		
1c	420	8490		
2a	316	6367.5	21191.7	0.300471
2b	316	6367.5		
2c	316	6367.5		
3a	210	4245	14013.5	0.302922
3b	210	4245		
3c	210	4245		
4a	105	2122.5	6861.1	0.309353
4b	105	2122.5		
4c	105	2122.5		

For this example: n=4 r2= 1.00 y=-0.139 + 3.328X. The mean ($\bar{X}$) is 0.30395 and 0.30299 is the median and conc. (ppbc) = 0.30048 x (area) + 0.042

Where Y = conc. (ppbc), M = 0.30048, X = area, B = 0.042 and Y = M x + B

11.3.3 Calibration Quality Control

It is assume that the NBS propane standard is reliable and valid for 2 years from date of purchase. Three to five different concentrations of the NBS standard and one zero standard are injected and the response factors are obtained, as discussed above. The percent difference of the response factor from the mean shall be no more than 5%. The percent difference is calculated by:

% Diff. = ((Response - Mean)/Mean) x 100

For example:

Response Factor	Mean	Difference	% Difference
0.303058	0.30395	0.000892	0.29
0.300471	0.30395	0.003479	1.14
0.302922	0.30395	0.001028	0.34
0.309353	0.30395	0.005403	1.78

Problems leading to a failure of the system to meet the above requirement for the response factors must be corrected before proceeding with the analysis. Minor variations from the proper value are probably due to operator error. However, large variations are probably attributable to equipment problems.

It is assumed that the response of the FID is linear with respect to the number of carbon atoms present (i.e., r^2 should be $\geq$ .95). This assumption has been previously verified (ref. 3) for several hydrocarbon compounds. The intercept should be not significantly different from zero at a =0.05. A positive intercept implies propane contemination.

Procedures for least-squares method of fitting a linear or nonlinear function to the calibration data set are found in appendix J of reference 4. The calculation for linear function is:

$$b = \frac{n(\sum xy) - (\sum x)(\sum xy)}{n(\sum x^2) - (\sum x)^2} = \text{slope of fitted line}$$

$$a = \frac{\sum y - b(\sum x)}{n-1} = \text{intercept of line}$$

Where n = number of points, x = area of propane peak, and y = equivalent propane conc.

11.3.3.1 Establishment of Standard Error of Estimate

After the calibration curve statistics has been calculated, the standard error of estimate or (Se) can be calculated using:

$$Se = \sqrt{(((\sum y^2 - a(\sum y) - b(\sum xy))/n-2)}$$

Whereas, a = y-intercept, b =slope and n= number of points in the calibration curve

A calibration will show variation in both slope and intercept over time and the SE will become larger. The Se has properties analogous to those of the standard deviation and can be used as an indicator of curve degradation. For data analysis, the SE will be used to compute the upper and lower limits for a single data observation (xobs) based on the calibration curve data using:

$$(a + (b\ xobs)) \pm ta/2 \times Se \times \sqrt{1 \pm \frac{1}{n} + \frac{n(xobs - \bar{x})2}{n(\sum x^2)-(\sum x)^2}}$$

Whereas ta/2 is obtained from the t distribution table at 95 % and the number of degrees of freedom is n-2.

11.3.3.2 Establishment of Initial Warning and Control limits

After the initial calibration curve has been constructed according to 11.3.2, reanalyze additional samples of the low and high concentration standards. Calculate the concentrations using the previously derived calibration curve. Repeat this procedure until at least ten determinations at each concentration level have been made. These additional high and low concentrations should be collected on ten different days to provide a realistic estimate of the method daily variability. Calculate standard deviation(s) at each concentration level (i.e., highest and lowest standard). Use the mean concentration as the mean value ($\bar{X}$) for determining the control limits. A warning limit of $\bar{X} \pm 2s$ (95 %) and a control limit of $\bar{X} \pm 3s$ (99 %) should be used.

11.4 STANDARDIZATION

Information to be supplied at a later date.

12.0 ANALYSIS PROCEDURES

The analysis procedure is divided into two stages: Sample preparation and gas chromatographic analysis.

12.1 Preparation Stage

The sample preparation steps are:

A. Adjust instrument gas flow rates.

1) Turn off the FID and FID heater - allow to cool to room temperature.

2) Attach a soap film flow meter to the detector chimney (see instrument instruction manual for an illustration this apparatus.

3) Set the carrier gas (Helium) pressure to 200 kPa (29 psia).

4) Set the hydrogen pressure to 250 kPa (35 psia).

<u>WARNING</u> - Hydrogen delivery pressure should be less than detector air pressure.

Adjust the hydrogen flow to 28-30 cm^3/min.

5) Set the detector air pressure to 300 kPa (45 psia). Adjust the detector flow to 430 cm^3/min $\pm$ 10 cm^3/min.

6) Set the makeup nitrogen pressure to 300 kPa (45 psia). Adjust the nitrogen makeup and carrier gas flow rate to a total flow of 30 cm^3/min.

NOTE: The above flow rates were optimized for the given column on an HP 5880A gas chromatograph with FID. If another gas chromatograph is used, adjust the flow rates to obtain maximum sensitivity according to the manufacturers instructions for that instrument.

B. Adjustment of Carrier Gas Flow Rate

Verify that the carrier gas (Helium) pressure is at 29 kPa. Refer to Section 1.11.1 for fine tuning of the carrier gas flow rate. Flow rate is dependent upon the column head pressure.

C. Set Up Detector

With the flow rates adjusted as in Step A, remove the adapter from the FID chimney and reset the detector temperature to 250°C. Light the detector with the ignitor and check that combustion is taking place.

D. Column and Value Temperatures

Detector = 250°C.

Initial Oven Temperature = -50°C.

Oven Temperature Programming Rate = 8°C/min (temperature programming started 2 minutes after time of injection).

Final Oven Temperature = 200°C.

Six-Port Valve Temperature = 60°C.

12.2 Analysis Stage

Preconcentration and injection of the sample is carried out as follows. Initial conditions are these: V2 is closed, vacuum pump is on, valves V3 and V6 are closed, gas sampling valves V4 and V5 are in the off position (Figure 1). Attach the canister to be analyzed to the inlet line. Open valves V3 and V6 to evacuate the system. When the vacuum gauge (P1) reaches 50 Torr or below, close valve V6. The system should remain at or very near 50 Torr. A rising pressure indicates a leak in the system.

The sample concentrating trap is immersed in a Dewar flask containing liquid oxygen (or liquid argon) sufficient to cover most of the "U" but placed so that the compression fittings are neither inside the flask nor touching the liquid cryogen. If the fittings are inside the flask, sample will condense in the fittings instead of on the trap. This could result in either plugged carrier gas flow due to ice forming in the fitting and/or improper sample plug injection of the trapped hydrocarbons.

Open valve V2 and adjust valve V1 to a flow of 100 cm3/min, using mass flow-meter M1. When the pressure gauge (P1, Figure 2) is at 60 Torr, actuate valve V4 (V4 is switched to one direction, see Figure 2). Adjust flow rate back to 100 cm^3/min, using valve V1, if necessary.

When P1 reads 140 Torr, inject sample onto column by actuating valve V5 (Figure 3), removing liquid oxygen flask from trap, immersing the U-trap in the hot water bath, and pressing start button on electronic integrator (and GC, if needed); deactivate valve V4 (Figure 3).

CAUTION: It is extremely important that V5 be closed before removing the liquid oxygen flask from the trap. Failure to observe this sequence will permit light hydrocarbons to be vented before injection.

At a time of 2 minutes into the run, deactivate valve V5. Stop the run manually or automatically after approximately 35 minutes or when the last compound of interest elutes. Identify sample peaks by their retention times, as determined in Section 11.3.2. An example chromatogram is shown as Figure 4.

At least one QC sample (Section 18.0) is run routinely. Upon completion of the sample run, calculate and review the QC results to determine if there are any significant differences. Any value falling outside the control limits is indicative of a system problem and requires corrective action (Section 15.0) before continuing analysis of samples.

13.0 CALCULATIONS

Using the calibration constant (k) determined in section 11.3.2, calculate the concentration of each compound (peak) as follows:

$$\text{Concentration, ppbC} = (k)(\text{Area})$$

where the area is in integrator counts. Most integrators may be programmed to perform this calculation and present results directly in units of concentration.

13.1 Ambient Data

To calculate the upper and lower limits of the concentration (i.e., Limits of prediction), the appropriate formula to calculate the limits of prediction are given in section 11.3.3.1

14.0 Data Reporting

The concentration of each C_2-C_{12} hydrocarbon should be reported. The integrator chart of sample and calibration standard should be saved as a record of analysis. Data tape from the integrator computer system should be identified, logged in the laboratory notebook, and stored. Sample run report should be recorded in the laboratory notebook in the following format:

Day Month
Notes: (e.g., QC, Standard, Duplicate, Replicate, etc.)

ID	SITE	DATE	CAN#	PEAKS	DB-1	TAPE	(COMPARISONS)

Other forms of computer data storage should be noted when they occur. It is recommended that all C_2-C_{12} hydrocarbon peak data be stored in a computer compatible format for ease of reporting and analysis.

15.0 Corrective Action

Corrective action should be taken whenever any of the following are observed:

- Internal QC checks exceeding limits.
- Variation of response, as shown by more than a ± 15 percent change in calibration constant.
- Variation of ±0.2% of retention times for specific peaks.
- Poor or ill-shaped peaks (wide or shallow).
- Fused or combined peaks.
- Presence of other peaks which elute with the compounds of interest (C_2-C_{12} hydrocarbons).
- Integrator failure to correctly recognize start time, stop time, or to correctly determine baseline and peak areas.

Determination of the proper corrective action requires a knowledge of chromatographic principles and instrumentation beyond the scope of this document.

16.0 METHOD PRECISION

Based on repeated analysis of NBS SRM propane in air Standards over a one year period, the variation of the calibration Constant (k) was found to be within ± 15 percent of the initial value. Replicate analysis of ambient air samples for total nonmethane organic compounds (NMOC) using a similar technique (reference 2) showed an analytical precision of approximately ± 12 percent. The precision for C_2-C_{12} hydrocarbons should be similar. Method precision will be determine from replicate analysis of the RTI canister or duplicate measurements made at concentration levels representative of the range experienced by routine samples. Operator and daily instrument precision will be determined from duplicate analyses of ambient canisters.

17.0 METHOD ACCURACY

Due to the lack of suitable NBS standards for the range of hydrocarbons, the accuracy for analysis of all hydrocarbons (C_2-C_{12}) cannot be directly determined using the propane standard. For this method, the propane SRM will be used to determine the accuracy. External audits are an essential part of the method QA program and performance audits may be used to determine instrument accuracy.

18.0 DAILY QUALITY CONTROL

This section specifies the daily QC program and discusses responsibilities for evaluation of the QC data. Calibration QC is discussed in section 11.3. These procedures require real-time review of analytical performance by the analyst, and QC review of all data directly after input to the data base.

18.1 QC Checks and Frequency

One sample of NBS SRM propane in air should be analyzed at the beginning of each day that a sample is run. One or more QC canisters will be run during the sampling day. Duplicates of the QC canisters will be run to detect procedural or operator bias as part of the real-time within-day QC review. Replicates will be run to detect variability in the instrument performance (day to day) and to determine the instrument precision.

18.1.1 Duplicates

Positive or negative differences of duplicate measurements are indicative of gross method error or procedural in-run operator bias. The data obtained from duplicate measurements will be used to determine when the GC is out of statistical control. The percent difference of the results should be no more than 10%.

The standard deviations used to generate the initial QC control limits (section 11.3.5) can be used to evaluate to the duplicate differences initially. Duplicate measurements should agree within $2\sqrt{2}\,s$ (or 2.83 times the s). After a reasonable period of time (i.e., ten or more duplicate measurements), the following procedure for calculating new duplicate control limits should be performed.

For duplicate measurements x and y, where x and y are the observation in the order obtained, the difference d = x -y is calculated and recorded. To determine duplicate control limits after ten to fifteen sets of duplicates, the formula for s is:

$$s = \sum d^2/2k$$

where k is the number of subgroups or pairs of duplicate analyses. The average range (R) for duplicates is:

$$\bar{R} = \sum \left| d \right| /k$$

Control limits can be reestablished based on the number of duplicates performed over a period of time. Control charts for differences and ranges can be constructed by $\pm 3\sqrt{2}s$ with the central line being 0; the limit for the range can be obtained from D4R (Ref. 4, Section H for D4 value).

18.1.2 Replicate Measurements

Positive or negative differences of analysis replicate measurements with respect to the initial value measured are indicative of a method error or operator day to day bias. The data obtained from these measurements will be use to determine when the measurement system is out of statistical control and to determine analytical precision.

Historical replicate data must first be combined as necessary to develop an assessment of precision that defines the expected standard deviation of replicates. The standard deviations used to generate the QC control limits (section 11.3.5) can be used initially. Recent and historical patterns are essential to evaluating the control status using replicate measurements. The number of replicate measurements needed for an experiment will be determined on the historical or recent variability of the system.

Given a series of repeated measurements (R1,R2,---Rn), the formula for s is:

$$s = \sum (D)^2/2k$$

where k is the number of replicate pairs and D is difference between the pair values. It is important that all replicates are determined under identical conditions and that the distribution of repeated results is approximately "normal" to establish the control limits. It is recommended that the standard deviation and range charts be used and the Control limits are set at 3s and 2s . A ratio greater than 1.3 between-run (replicates) and within-run (duplicates) should be considered "statistically significant" and corrective action taken. Reestablish new control limits whenever instrumental operation conditions are varied, calibrations performed, or QC constrictions are changed.

18.1.3 Control Chart for QC Canisters/Samples

The measured value of the QC sample is plotted on the control charts for the QC sample concentration differences or as an percent difference. The measured value (ppbC) should not differ by more than two times the standard deviation of NBS-certified value (ppb). If this occurs, the system should be checked for proper operation. If the condition persists, or if two successive QC measurements are outside of the $\pm$ 2s limits, or if the measured value exceeds the upper or lower control limit (three standard deviations, section 11.3.5), the detector should be cleaned and checked for correct operation. If the response remains outside the upper or lower control limit, then the instrument should be recalibrated and/or corrective action taken. Plot the data obtained from the QC measurements on a control chart for routine assessment of analytical bias and precision.

18.1.4 Control Chart for Daily NBS SRM

The measured value of the daily NBS SRM propane sample is plotted on a control chart. The measured value (ppbC) should not differ by more than two times the standard deviation of NBS-certified value (ppb) If this occurs, the system should be checked for proper operation. If the condition persists or the measured value exceeds the upper or lower control limit (three standard deviations, section 11.3.5), corrective action should be performed before any further sample analysis. This includes checking the sample preconcentration procedure and the GC analysis system for proper operation. If the response remains outside the upper or lower control limit), then the instrument should be recalibrated.

18.2 Performance Evaluations

Participation in performance evaluation studies is recommended for this method. The samples used for these performance audits should contain the species of interest at concentrations within the normal working range of this method. The true values should remain unknown to the analyst until the end of the study to prevent operator bias.

18.3 Systems Audits

This section contains the recommended procedure for performing an system audit for this method. The need for and scheduling of systems audits will be determine by the Project Officer. The basic scope of the system audit will be:

1. to verify the adherence to this research protocol/method; and

2. to verify the data flow and archiving process used for the computerized data base.

Organizations performing systems audits should review the following sections and the audit questionnaire (Appendix A). It is recommended that the independent audit plan be compared to this document and differences noted. In all cases, methods for assessing the data quality for this method must be approved by the organization being audited prior to starting the audit.

18.3.1 Audit Plan

1. Meet with organizational personnel, identify key personnel, identify the purpose of the audit, and review audit plan and questionnaire.

2. Collect all QC Documentation (i.e., QC Charts, forms, notebooks, etc.) and data base print outs.

3. Perform audit of sample analysis.

4. Perform audit of sample data processing activities.

5. Perform audit of data validation.

6. Perform audit of data base.

7. Complete audit questionnaire.

8. Hold audit review meeting and critique audit findings. Make corrections to audit findings or questionnaire if required. Discuss corrective action plans, if appropriate.

It is suggested that data quality might be assigned one of three levels according to the following guidelines:

1. Unknown quality - a vital piece of QC data is missing or can not be verified.

2. Questionable quality - generally all data and documents are in good order, but a secondary item needed to completely characterize the data is missing, e.g., a control chart to demonstrate that the method was in control over a given time interval.

3. Known quality - all documentation is in order, with data traceable from the final report to the date and time of the analysis.

18.3.2 Documents

The following documents will be reviewed at the time of the audit:

1. Laboratory notebooks or forms for method.

2. QC charts for duplicates or replicates

3. At least five previous calibration curves.

4. Instruction manuals and related SOP's or RPM's

5. Documents relating to quality of materials used.

6. All documentation for GC computer, data validation, and data storage

7. All documents related to compliance with ASRL QA plan requirements.

19.0 DATA VALIDATION

Data will be critically reviewed to identify and isolate errors. Data validation occurs at each step of the measurement process, beginning with the GC electronic integrator. Once data enters a computerized storage and retrieval system, a more detailed screening process is required.

20.0 QUALITY ASSURANCE REPORTS TO MANAGEMENT

Laboratory QC data and audit results are reported quarterly. A report will be submitted to management anytime for one or more of the following:

1. When a significant discrepancy is noted and an examination of the analytical procedure reveals not apparent reason for the discrepancy;

2. When the analysis comparing the commercial and NBS standards indicates serious deterioration of the commercial standard; and

3. When audit results or out-of-control situations are noted that indicate that the method is producing data of unknown quality.

21.0 PREVENTIVE MAINTENANCE

To be defined at later date.....

REFERENCES

1. Knoll, J. E., Journal of Chromatographic analyses, Vol. 23, p. 422, September 1987.

2. EPA/RTP Safety Manual, Support Services Office, Environmental Research Center, Research Triangle Park, NC 27711.

3. Dietz, W. A., Journal of Gas Chromatography, Vol. 5, pp. 68-71 (1967).

4. Quality Assurance Handbook for Air Pollution Measurements, Volume 1. Principles (EPA-600/9-76- 005 Dec 1984).

GLOSSARY

BIAS
- An error in a method that systematically distorts results.

REST TO BE DEFINED LATER

APPENDIX A

TABLE OF
HYDROCARBON IDENTIFICATIONS AND RETENTION TIMES

Olefins = Alkenes

TABLE 1. HYDROCARBON IDENTIFICATIONS AND RETENTION TIMES

HP5880 Calibration Table

CAL. NO.	Ret. Time	REF	Compound Name	CAL NO.	Ret. Time	REF	Compound Name
0	0.000	0	Uncalibrated	101	2.018	0	ETHANE
102	1.830	0	ETHYLENE	103	1.960	0	ACETYLENE
104	2.988	0	PROPENE	105	3.105	0	PROPANE
106	3.373	0	Unknown	107	3.540	0	PARAFFIN
108	4.017	0	OLEFIN	109	4.450	0	OLEFIN
110	5.105	1	ISOBUTANE	111	5.423	0	Unknown
112	5.661	0	Unknown	113	6.115	0	2-METHYLPROPYLENE
114	6.286	0	BUTENE-1	115	6.462	1	n-BUTANE
116	6.937	0	t-2-BUTENE	117	7.500	0	c-2-BUTENE
118	8.739	0	C4 OLEFIN	119	9.398	1	ISOPENTANE
120	9.652	0	C5 OLEFIN	121	10.000	0	1-PENTENE
122	10.086	0	C5 OLEFIN	123	10.272	0	2-METHYL-1-BUTENE
124	10.410	1	n-PENTANE	125	10.560	0	ISOPRENE
126	10.737	0	t-2-PENTENE	127	11.008	0	C5 OLEFIN
128	11.116	0	C5 OLEFIN	129	11.172	0	c-2-PENTENE
130	11.256	0	C5 OLEFIN	131	11.505	0	C6 PARAFFIN
132	11.551	0	C6 PARAFFIN	133	11.672	0	2,2-DIMETHYLBUTANE
134	11.994	0	C6 OLEFIN	135	12.252	0	C6 OLEFIN
136	12.486	0	C6 PARAFFIN	137	12.490	0	C6 OLEFIN
138	12.631	0	CYCLOPENTANE	139	12.763	0	2,3-DIMETHYLBUTANE
140	12.848	0	C6 OLEFIN	141	12.957	1	2-METHYLPENTANE
142	13.031	0	C6 OLEFIN	143	13.097	0	C6 OLEFIN
144	13.369	0	C6 OLEFIN	145	13.440	0	3-METHYLPENTANE
146	13.643	0	C6 OLEFIN	147	13.850	0	C6 OLEFIN
148	14.062	0	1 n-HEXANE	149	14.164	0	C7 PARAFFIN
150	14.240	0	C7 OLEFIN	151	14.317	0	C7 OLEFIN
152	14.406	0	C7 OLEFIN	153	14.543	0	C7 OLEFIN
154	14.605	0	C7 OLEFINN	155	14.750	0	C7 OLEFIN
156	14.898	0	METHYLCYCLOPENTANE	157	15.085	0	2,4-DIMETHYLPENTANE
158	15.177	0	C7 PARAFFIN	159	15.281	0	C7 OLEFIN
160	15.523	0	C7 OLEFIN	161	15.657	0	C7 PARAFFIN
162	15.681	1	BENZENE	163	15.878	0	3,3-DIMETHYLPENTANE
164	15.980	0	CYCLOHEXANE	165	16.056	0	C7 OLEFIN
166	16.320	0	2-METHYLHEXANE	167	16.358	0	2,3-DIMETHYLPENTANE
168	16.437	0	C7 PARAFFIN	169	16.507	0	C7 OLEFIN
170	16.592	0	3-METHYLHEXANE	171	16.785	0	C7 PARAFFIN
172	16.916	0	C7 PARAFFIN	173	17.007	0	2,2,4-TRIMETHYLPENTANE
174	17.316	0	C8 OLEFIN	175	17.358	0	n-HEPTANE
176	17.507	0	C8 PARAFFIN	177	17.667	0	C8 OLEFIN
178	17.762	0	C8 OLEFIN	179	17.984	0	METHYLCYCLOHEXANE
180	18.343	0	C8 PARAFFIN	181	18.407	0	C8 PARAFFIN
182	18.602	0	C8 PARAFFIN	183	18.816	0	C8 PARAFFIN
184	18.897	0	2,3,4-TRIMETHYLPENTANE	185	19.022	1	TOLUENE
186	19.170	0	C8 PARAFFIN	187	19.202	0	C8 PARAFFIN
188	19.257	0	C8 PARAFFIN	189	19.361	0	C8 PARAFFIN
190	19.408	0	C8 PARAFFIN	191	19.585	0	C8 PARAFFIN
192	19.701	0	C8 PARAFFIN	193	19.905	0	C8 PARAFFIN
194	20.001	0	C8 PARAFFIN	195	20.109	0	C8 PARAFFIN
196	20.180	0	C8 PARAFFIN	197	20.250	0	C8 PARAFFIN
198	20.330	0	n-OCTANE	199	20.377	0	C9 PARAFFIN
200	20.470	0	C9 PARAFFIN	201	20.662	0	C9 PARAFFIN

TABLE 1. HYDROCARBON IDENTIFICATIONS AND RETENTION TIMES (Continued)

HP5880 Calibration Table

CAL. NO.	Ret. Time	REF	Compound Name	CAL NO.	Ret. Time	REF	Compound Name
202	20.827	0	C9 P#RAFFIN	203	20.949	0	C9 OLEFIN
204	21.009	0	C9 PARAFFIN	205	21.123	0	C9 PARAFFIN
206	21.172	0	C9 PARAFFIN	207	21.223	0	C9 PARAFFIN
208	21.277	0	C9 PARAFFIN	209	21.369	0	C9 PARAFFIN
210	21.425	0	C9 PARAFFIN	211	21.524	0	C9 PARAFFIN
212	21.596	0	C9 PARAFFIN	213	21.744	0	ETHYLBENZENE
214	21.842	0	C9 PARAFFIN	215	21.973	1	m&p-XYLENE
216	22.140	0	C9 PARAFFIN	217	22.235	0	C9 PARAFFIN
218	22.322	0	C9 PARAFFIN	219	22.415	0	C9 PARAFFIN
220	22.462	0	C9 OLEFIN	221	22.518	0	C9 PARAFFIN
222	22.601	0	o-XYLENE	223	22.688	0	C9 PARAFFIN
224	22.733	0	C9 PARAFFIN	225	22.785	0	C9 PARAFFIN
226	22.860	0	C9 PARAFFIN	227	22.940	0	C9 PARAFFIN
228	23.034	0	n-NONANE	229	23.174	0	C10 PARAFFIN
230	23.243	0	C10 PARAFFIN	231	23.305	0	C10 PARAFFIN
232	23.455	0	C10 PARAFFIN	233	23.540	0	C10 PARAFFIN
234	23.635	0	C10 PARAFFIN	235	23.706	0	C10 PARAFFIN
236	23.824	0	C10 PARAFFIN	237	23.883	0	C10 PARAFFIN
238	23.940	0	C10 PARAFFIN	239	24.007	0	C10 OLEFIN
240	24.107	0	C10 OLEFIN	241	24.177	0	C10 PARAFFIN
242	24.212	0	n-PROPYLBENZENE	243	24.310	0	C10 PARAFFIN
244	24.386	0	p-ETHYLTOLUENE	245	24.447	0	m-ETHYLTOLUENE
246	24.578	0	C9 AROMATIC	247	24.632	0	C10 PARAFFIN
248	24.694	0	C10 PARAFFIN	249	24.852	0	o-ETHYLTOLUENE
250	24.979	0	C9 AROMATIC	251	25.051	0	C10 PARAFFIN
252	25.122	0	C10 OLEFIN	253	25.217	0	1,2,4-TRIMETHYLBENZENE
254	25.320	0	C9 AROMATIC	255	25.408	0	C10 PARAFFIN
256	25.520	0	n-DECANE	257	25.597	0	C9 AROMATIC
258	25.661	0	C9 AROMATIC	259	25.770	0	C9 AROMATIC
260	25.909	0	1,2,3-TRIMETHYLBENZENE	261	25.972	0	C11 PARAFFIN
262	26.043	0	C11 PARAFFIN	263	26.103	0	C11 PARAFFIN
264	26.218	0	C10 AROMATIC	265	26.379	0	C10. AROMATIC
266	26.497	0	C10 AROMATIC	267	26.567	0	C10 AROMATIC
268	26.710	0	C10 AROMATIC	269	26.807	0	C10 AROMATIC
270	26.842	0	C10 AROMATIC	271	26.877	0	C11 PARAFFIN
272	26.960	0	C10 AROMATIC	273	27.023	0	C11 PARAFFIN
274	27.142	0	C11 PARAFFIN	275	27.181	0	C10 AROMATIC
276	27.227	0	1,2-DIMETHYL-4-ETHYLBENZENE	277	27.363	0	C10 AROMATIC
278	27.421	0	C10 AROMATIC	279	27.601	0	C11 PARAFFIN
280	27.680	0	C10 AROMATIC	281	27.769	0	C10 AROMATIC
282	27.809	0	1,2-DIMETHYL-3-ETHYLBENZENE	283	27.953	0	C10 AROMATIC
284	28.040	0	1,2,4,5-TETRAMETHYLBENZENE				
285	28.116	0	1,2,3,5-TETRAMETHYLBENZENE				
286	28.193	0	C10 AROMATIC	287	28.244	0	C11 PARAFFIN
288	28.360	0	C10 AROMATIC	289	20.763	0	C9 PARAFFIN
290	28.623	0	C11 AROMATIC	291	28.662	0	C11 AROMATIC
292	28.730	0	C11 AROMATIC	293	28.845	0	C11 AROMATIC
294	28.923	0	C11 AROMATIC	295	29.056	0	C11 AROMATIC
296	29.120	0	C11 AROMATIC	297	29.199	0	C11 AROMATIC
298	29.270	0	C11 AROMATIC	299	29.350	0	C11 AROMATIC

TABLE 1. HYDROCARBON IDENTIFICATIONS AND RETENTION TIMES (Continued)

HP5880 Calibration Table

CAL. NO.	Ret. Time	REF	Compound Name	CAL NO.	Ret. Time	REF	Compound Name
300	29.570	1	C11 AROMATIC	301	29.695	0	C11 AROMATIC
302	29.840	0	C11 AROMATIC	303	29.888	0	C11 AROMATIC
304	29.939	0	C_{12} PARAFFIN	305	30.077	0	C11 AROMATIC
306	30.159	0	C11 AROMATIC	307	30.210	0	C11 AROMATIC
308	30.283	0	C11 AROMATIC	309	30.367	0	C11 AROMATIC
310	30.598	0	C11 AROMATIC	311	30.727	0	C11 AROMATIC
312	30.770	0	C12 PARAFFIN	313	30.821	0	C11 AROMATIC
314	30.908	0	C12 AROMATIC	315	31.070	0	C12 AROMATIC
316	31.162	0	C12 AROMATIC	317	31.253	0	C12 AROMATIC
318	31.305	0	C12 AROMATIC	319	31.383	0	C12 AROMATIC
320	31.471	0	C12 AROMATIC	321	31.617	0	C12 AROMATIC
322	31.667	0	C12 AROMATIC	323	31.924	0	C12 AROMATIC
324	31.983	0	C12 AROMATIC	325	32.095	0	C12 AROMATIC
326	32.210	0	C12 AROMATIC	327	32.340	0	C12 AROMATIC
328	32.380	0	C13 PRAFFIN	329	32.530	0	C12 AROMATIC
330	32.623	0	C12 AROMATIC	331	32.718	0	C12 AROMATIC
332	32.823	0	C12 AROMATIC	333	32.923	0	C12 AROMATIC
334	33.060	0	C12 AROMATIC	335	33.098	0	C13 PARAFFIN
336	33.147	0	C12 AROMATIC	337	33.450	0	C12 AROMATIC
338	33.802	0	C12 AROMATIC	339	33.817	0	C12 AROMATIC
340	36.057	0	C12 AROMATIC	341	7.340	0	C4 OLEFIN
342	8.227	0	C4 OLEFIN	343	8.350	0	C4 OLEFIN
344	13.673	0	C6 OLEFIN	345	15.493	0	C7 OLEFIN
346	16.156	0	C7 OLEFIN	347	16.637	0	C7 PARAFFIN
348	17.196	0	C7 OLEFIN	349	17.399	0	C8 OLEFIN
350	17.560	0	C8 OLEFIN	351	18.260	0	C8 OLEFIN
352	19.472	0	C8 PARAFFIN	353	20.063	0	C8 PARAFFIN
354	20.543	0	C9 OLEFIN	355	27.487	0	C11 OLEFIN
356	27.550	0	C10 AROMATIC	357	28.505	0	C10 AROMATIC
358	30.307	0	C11 AROMATIC	359	30.444	0	C11 AROMATIC
360	30.660	0	C11 AROMATIC	361	30.980	0	C12 AROMATIC
362	31.752	0	C12 AROMATIC	363	31.877	0	C12 AROMATIC
364	15.617	0	C7 OLEFIN	365	16.860	0	C7 PARAFFIN
366	18.080	0	C8 PARAFFIN	367	22.170	0	C9 PARAFFIN
368				369	13.310	0	C6 PARAFFIN
370	28.970	0	C10 AROMATIC	371	15.020	0	C7 OLEFIN
372	22.150	0	C9 PARAFFIN	373	27.125	0	C10 AROMATIC
374	28.460	0	C10 AROMATIC	375	3.926	0	C4 OLEFIN
376	13.520	0	C6 OLEFIN	377	29.413	0	C11 AROMATIC
378	35.220	0	C12 AROMATIC	379	28.550	0	C11 AROMATIC
380	29.032	0	C11 AROMATIC	381	33.376	0	C12 AROMATIC
382	3.293	0	C3 PARAFFIN	383	4.377	0	C3 PARAFFIN
384	7.206	0	C4 PARAFFIN	385	12.409	0	C6 PARAFFIN
386	14.953	0	C7 PARAFFIN	387	15.780	0	C7 OLEFIN
388	19.150	0	C8 PARAFFIN	389	20.760	0	C9 PARAFFIN
390	34.410	0	C12 AROMATIC	391	7.580	0	C4 PARAFFIN
392	8.850	0	C4 OLEFIN	393	9.700	0	C5 OLEFIN
394	10.120	0	C5 OLEFIN	395	11.790	0	C5 OLEFIN
396	12.150	0	C5 OLEFIN	397	18.650	0	C8 PARAFFIN
398	21.460	0	C9 PARAFFIN	399	21.890	0	C9 PARAFFIN

TABLE 1. HYDROCARBON IDENTIFICATIONS AND RETENTION TIMES (Continued)

HP5880 Calibration Table

CAL. NO.	Ret. Time	REF	Compound Name
400	23.770	0	C10 PARAFFIN
402	27.310	0	C10 AROMATIC
404	32.460	0	C12 AROMATIC
406	35.870	0	C12 AROMATIC
408	25.830	0	C9 AROMATIC
410	33.270	0	C12 AROMATIC
412	9.580	0	C5 OLEFIN
414	31.710	0	C12 AROMATIC
416	30.280	0	C11 AROMATIC
401	26.630	0	C10 AROMATIC
403	27.850	0	C10 AROMATIC
405	34.590	0	C12 AROMATIC
407	13.140	0	C6 PARAFFIN
409	30.530	0	C11 AROMATIC
411	34.310	0	C12 AROMATIC
413	10.890	0	C5 OLEFIN
415	15.480	0	C7 OLEFIN

APPENDIX B

GAS CHROMATOGRAPY
AUDIT QUESTIONNAIRE

	YES	NO
1) Does the technician have a current copy of the RPM at or near the bench?	___	___
2) Are gases traceable to, at a minimum, Research reagent grade gases?	___	___
3) Are calibration results within 5% of the mean?	___	___
4) Are outlying standards rejected? And is the rejection:	___	___
a) documented?	___	___
b) explained?	___	___
c) reviewed?	___	___
5) Are daily standards:		
a) run immediately following the calibration?	___	___
b) within ± 10% of known value?	___	___
6) Are repeated measurements made of:		
a) the highest standard?	___	___
b) the lowest standard?	___	___
7) Have the standard deviations for:		
a) the highest standard been computed?	___	___
b) the lowest standard been computed?	___	___
8) Have the initial control limits been computed for:		
a) daily standard measurements?	___	___
b) duplicate measurements?	___	___
c) replicate measurements?	___	___
9) Are standards reanalyzed periodically?	___	___
10) Are any samples analyzed in duplicate?	___	___
11) Are replicate samples analyzed?	___	___
12) Are QC samples analyzed?	___	___

		YES	NO
13)	Are QC sample control charts current?	___	___
14)	Are blinds analyzed?	___	___
15)	Are audit samples analyzed periodically?	___	___
16)	Are the following control samples analyzed:		
	a) spikes?	___	___
	b) interlaboratory?	___	___
	c) intralaboratory?	___	___
	d) old samples?	___	___
	e) other QC samples?	___	___
17)	Are NBS SRM samples analyzed regularly?	___	___
18)	Are accuracy measurements:		
	a) made on scheduled basis?	___	___
	b) within RPM specifications?	___	___
19)	Are precision measurements:		
	a) made on scheduled basis?	___	___
	b) within RPM specifications?	___	___
20)	Is GC preventive maintenance performed as required by RPM?	___	___
21)	Were corrective action procedures implemented as required?	___	___
22)	Are control charts and other QC records:		
	a) filled in an organized manner?	___	___
	b) recorded in laboratory notebook?	___	___
23)	Are computer printouts and reports spot-checked and validated?	___	___
24)	Have any of the following audits been performed in this laboratory?		
	a) Systems Audit?	___	___
	b) Performance audit?	___	___
25)	Are internal QC reports prepared on a timely basis to management?	___	___

APPENDIX C

FIGURES, FORMS AND EXAMPLES

TABLE 2. LEGEND FOR FIGURES 1, 2, AND 3

V1 = stainless steel needle valve

V2' V3' and V6 = shut-off valves (a)

V4 and V5 = 6-port electrically actuated gas sampling valve (attached to HP 5880A Gas Chromatograph).b)

M1 = 0 to 500 cm3/min mass flow meter

P1 = 0 to 200 Torr Wallace and Tierman Bourdon Gauge

(a) V2 is a stainless steel bellows valve on the canister. V3 and V6 are toggle valves; they may be stainless steel or brass.

(b) The gas sampling valve used should be capable of holding a vacuum down to 10 Torr for proper operation.

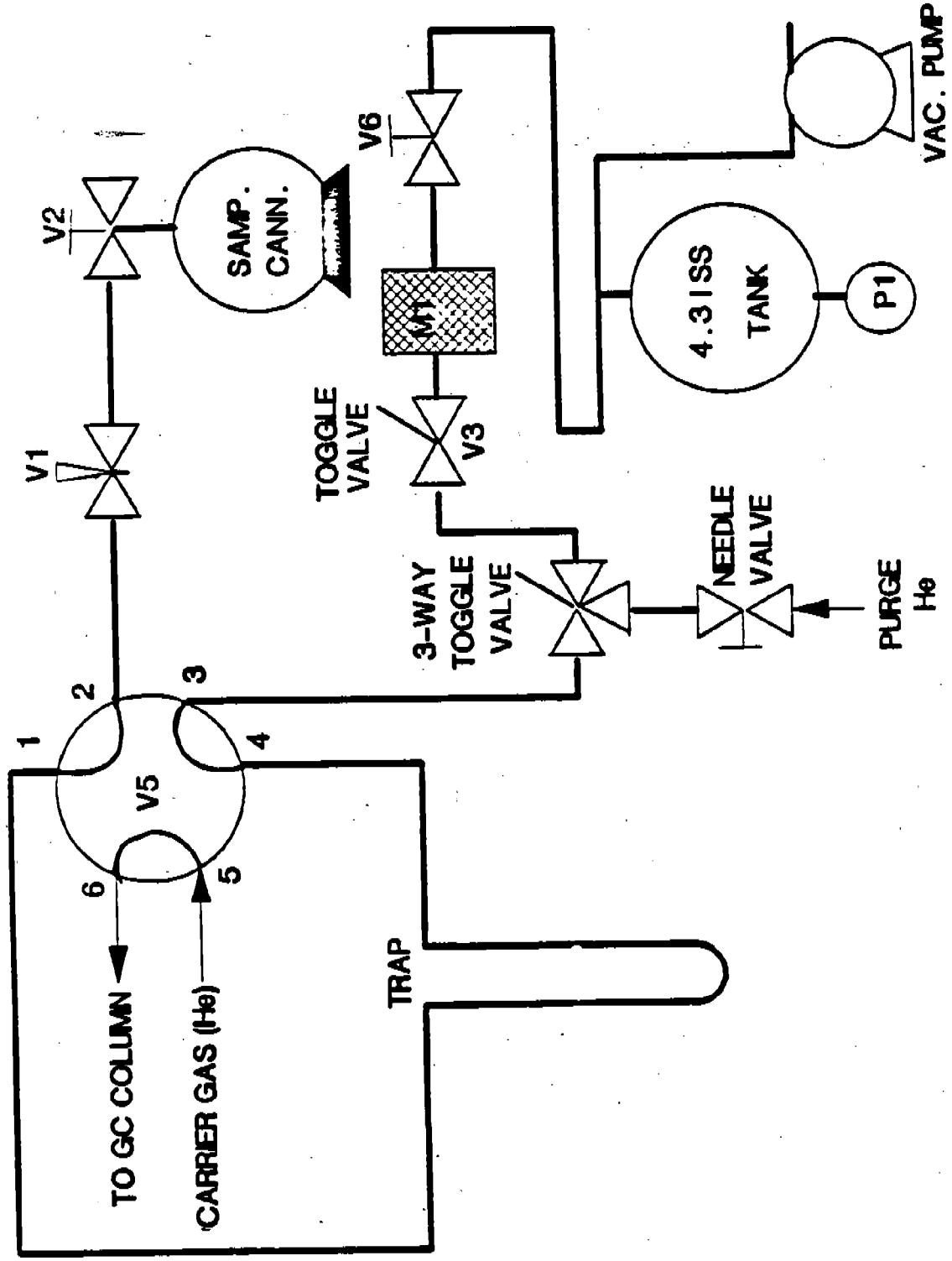

Figure 1. Inlet system—purge position.

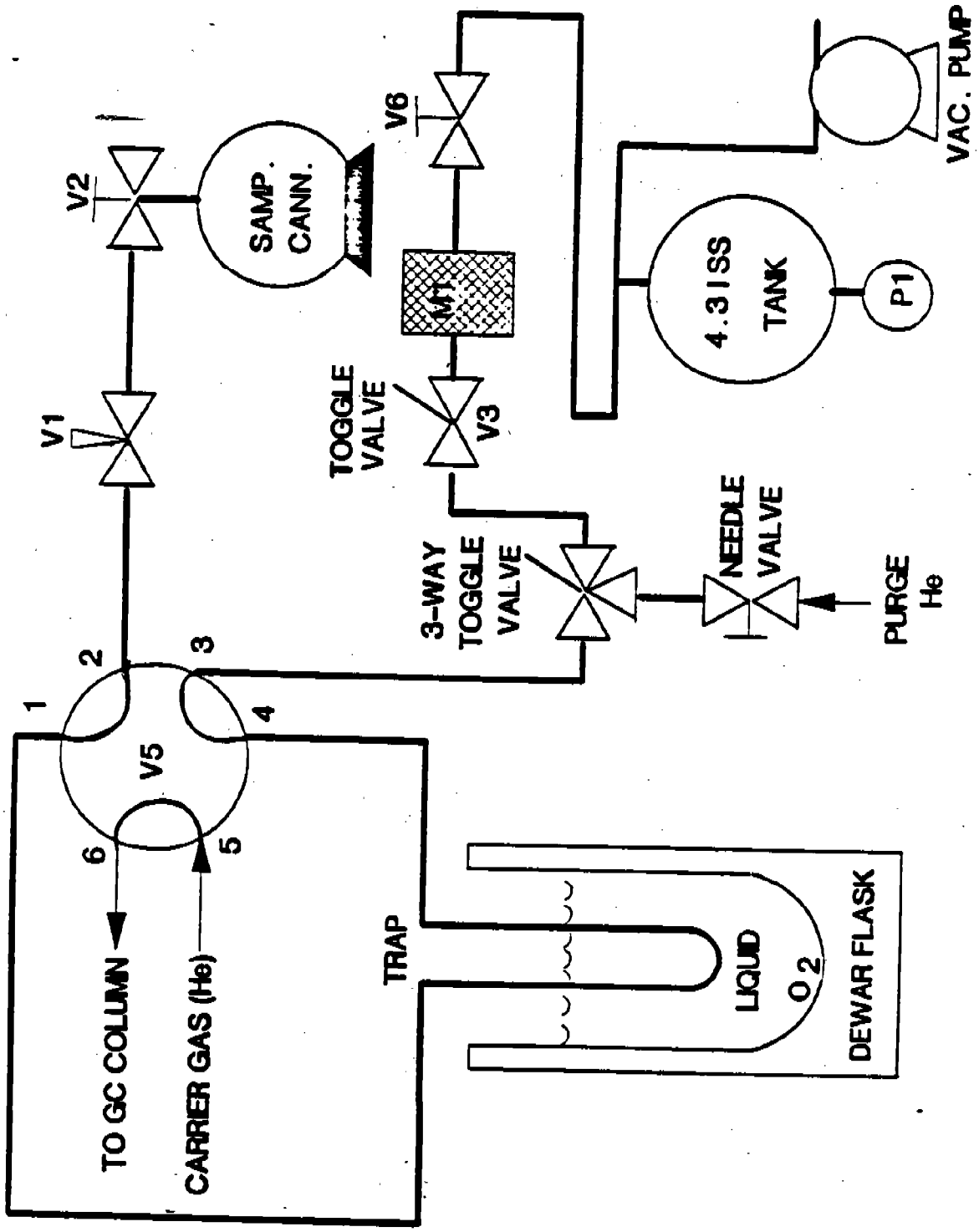

Figure 2. Inlet system—sample trapping position.

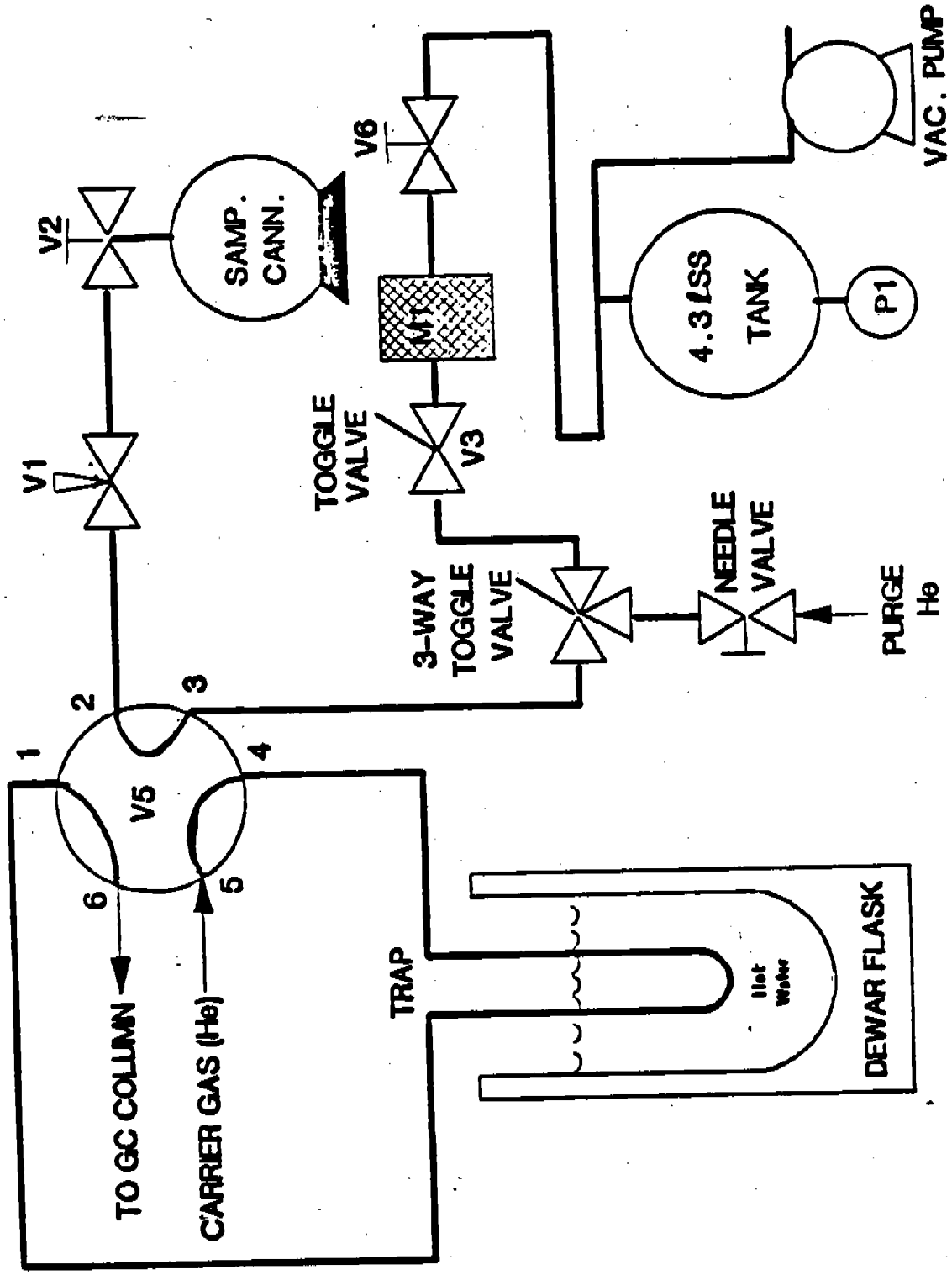

Figure 3. Inlet system—Injection position.

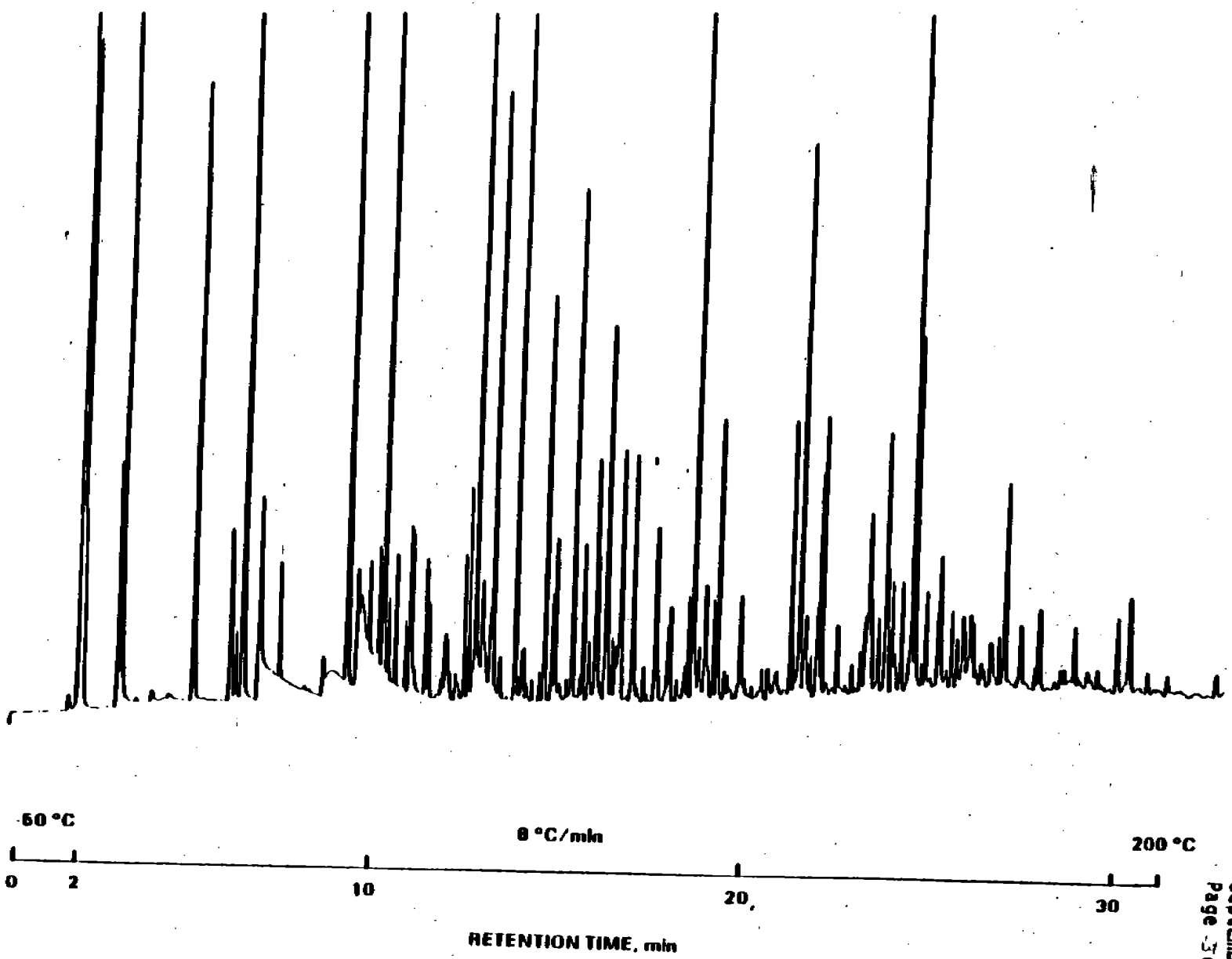

Figure 4. Gas chromatogram of ambient air C-2 to C-12 hydrocarbons separated on a DB-1 fused silica capillary column.

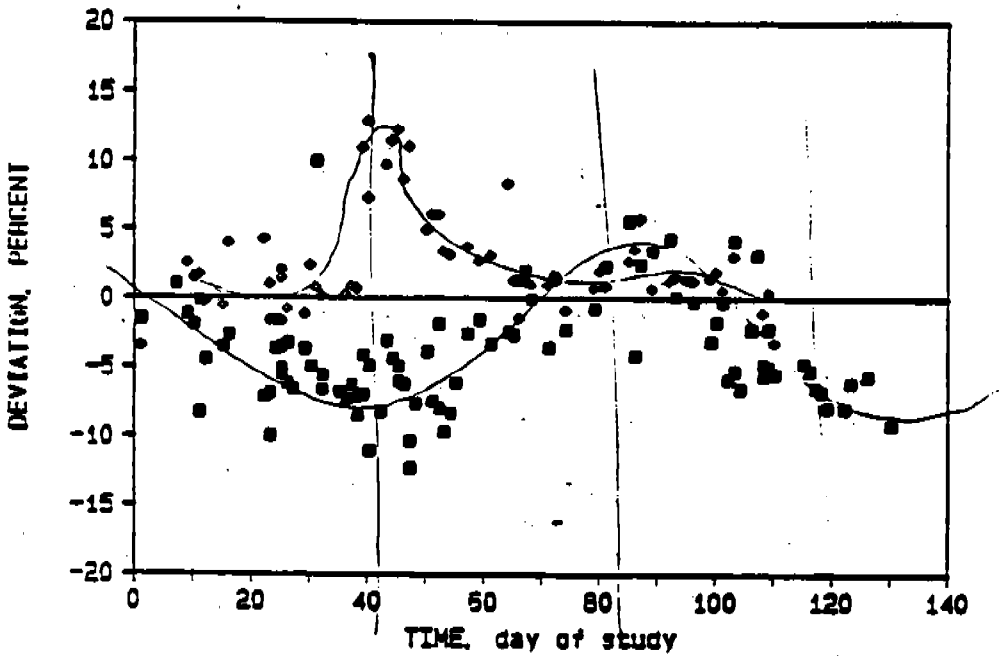

Figure 5. Deviation of measured NBS propane sample response from certified value (■) 1984 and (◇) 1985.

X AND CHART

PROJECT _____ MEASUREMENT _____ UNITS _____

DATE																										
MEASUREMENT CODE 1																										
MEASUREMENT CODE 2																										
MEASUREMENT CODE 3																										
MEASUREMENT RESULT 1																										
MEASUREMENT RESULT 2																										
MEASUREMENT RESULT 3																										
SUM																										
$\bar{X}$																										
s																										
AVERAGES, $\bar{X}$																										
	1	2	3	4	5	6	7	8	9	10	11	12	13	14	15	16	17	18	19	20	21	22	23	24	25	
STD DEV, s																										
COMMENTS (CORRECTIVE ACTION, ETC.)																										

A AND R CHART

PROJECT _____ MEASUREMENT _____ UNITS _____

DATE																										
MEASUREMENT CODE 1																										
MEASUREMENT CODE 2																										
MEASUREMENT CODE 3																										
MEASUREMENT RESULT 1																										
MEASUREMENT RESULT 2																										
MEASUREMENT RESULT 3																										
SUM																										
$\bar{X}$																										
R																										
AVERAGES, $\bar{X}$ 10																										
5																										
0																										
-5																										
-10																										
	1	2	3	4	5	6	7	8	9	10	11	12	13	14	15	16	17	18	19	20	21	22	23	24	25	
RANGES, R 5																										
0																										
-5																										
COMMENTS (CORRECTIVE ACTION, ETC.)																										

U. S. Department of Commerce
Philip M. Klutznick
Secretary

National Bureau of Standards
Ernest Ambler, Director

PROPANE 85-51-E

National Bureau of Standards
Certificate of Analysis

Standard Reference Material 1665b

Propane in Air

(Nominal Concentration 3 ppm)

(Mobile-Source Emission Gas Standard)

This Standard Reference Material is intended for use in the calibration of instruments used for the analysis of hydrocarbon in mobile-source emissions. It is not intended as a working standard, but rather as a primary standard to which the concentration of the daily working standards may be related.

Propane concentration: 2.83 ± 0.03 μmole/mole (ppm)

Cylinder Number: FF-18831 Sample Number: 85-51-E

The concentration of propane is relative to all other constituents of the gas. The uncertainty shown is the estimated upper limit of error of the propane concentration at the 95 percent confidence level. This uncertainty includes the inaccuracy of the gravimetric primary standard and the imprecision of intercomparison with the gravimetric standards. This sample is certified only for the concentration of propane. However, representative samples from the lot have been examined for the presence of other hydrocarbons. The estimated concentration of other hydrocarbons, expressed as propane, is 0.06 μmole/mole (ppm).

Each cylinder is individually analyzed and the concentration appearing above applies to the cylinder number and sample number identified on this certificate.

The original development and evaluation of the Propane in Air Series of these Standard Reference Materials was performed at the National Bureau of Standards by W. P. Schmidt and W. D. Dorko.

The overall direction and coordination of technical measurements leading to certification were performed in the Gas and Particulate Science Division under the chairmanship of E. E. Hughes and H. L. Rook.

The technical and support aspects involved in the preparation, certification, and issuance of this Standard Reference Material were coordinated through the Office of Standard Reference Materials by T. E. Gills.

Washington, D.C. 20234
January 31, 1980

George A. Uriano, Chief
Office of Standard Reference Materials

(over)

ge No.__ HP-5880A with DBI Calibration

A propane in air SRM was sampled at four sample lumes to determine the FID response factor.

RM: Propane = 2.83 ± 0.03 umole/mole (PPM)
= 8490 ppb as carbon
Cylinder Number = FF18831, Sample Number = 85-51-E

Analysis Results

ample ze, torr	Equivalent Propane Conc. ppbC	Area of Propane Peak	Response Factor conc/area
~~80~~	~~28014.4~~		
80	8490	28014.4	0.303058
60	63675	21191.7	0.300471
40	4245	14013.5	0.302922
20	21225	6861.1	0.309353
			0.30395 mean
			0.30299 median

.304
.304

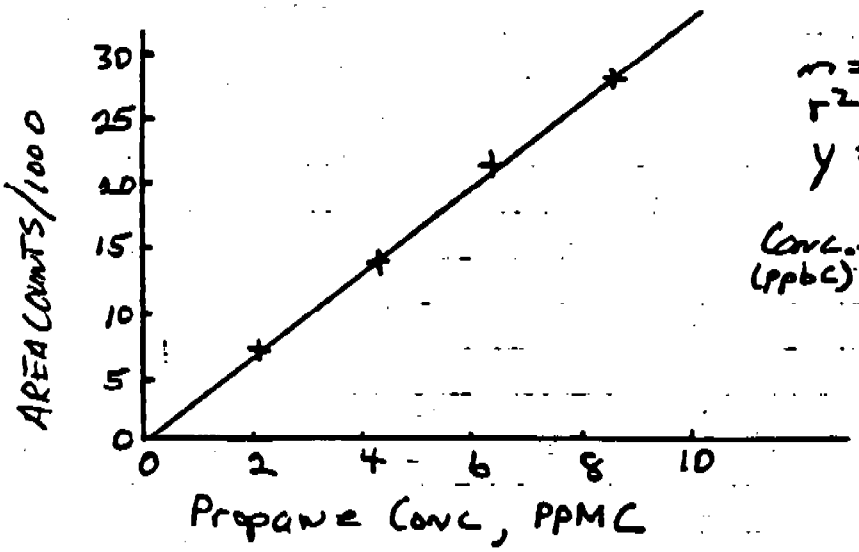

n = 4
$r^2 = 1.000$
$y = -0.139 + 3.328x$

Conc. (ppbC) = 0.30048 • (AREA) + 0.042

To Page No.____

sed & Understood by me,	Date	Invented by	Date
		Recorded by	4/15/88

APPENDIX K

SPECIATED NMOC ANALYTICAL RESULTS
(Obtain from Neil Berg, U.S. EPA)

TECHNICAL REPORT DATA

(PLEASE READ INSTRUCTIONS ON THE REVERSE BEFORE COMPLETING)

1. REPORT NO. EPA-454/R-99-011	2.	3. RECIPIENT'S ACCESSION NO.
4. TITLE AND SUBTITLE 1992 Nonmethane Organic Compound And Speciated Nonmethane Organic Compound Monitoring Program		5. REPORT DATE 4/1/92
		6. PERFORMING ORGANIZATION CODE
7. AUTHOR(S) Radian Corporation Research Triangle Park, NC 27709		8. PERFORMING ORGANIZATION REPORT NO.
9. PERFORMING ORGANIZATION NAME AND ADDRESS		10. PROGRAM ELEMENT NO.
		11. CONTRACT/GRANT NO. 68D80014
12. SPONSORING AGENCY NAME AND ADDRESS Office Of Air Quality Planning And Standards U.S. Environmental Protection Agency Research Triangle Park, NC 27711		13. TYPE OF REPORT AND PERIOD COVERED
		14. SPONSORING AGENCY CODE

15. SUPPLEMENTARY NOTES

16. ABSTRACT

IN CERTAIN AREAS OF THE COUNTRY WHERE THE NATIONAL AMBIENT AIR QUALITY STANDARD (NAAQS) FOR OZONE IS BEING EXCEEDED, ADDITIONAL MEASUREMENTS OF AMBIENT NONMETHANE ORGANIC COMPOUNDS (NMOC) ARE NEEDED TO ASSIST THE AFFECTED STATES IN DEVELOPING REVISED OZONE CONTROL STRATEGIES. BECAUSE OF PREVIOUS DIFFICULTY IN OBTAINING ACCURATE NMOC MEASUREMENTS, THE U.S. ENVIRONMENTAL PROTECTION AGENCY (EPA) HAS PROVIDED MONITORING AND ANALYTICAL ASSISTANCE TO THESE STATES, BEGINNING IN 1984 AND CONTINUING THROUGH THE 1992 NMOC MONITORING PROGRAM.

17. KEY WORDS AND DOCUMENT ANALYSIS

a. DESCRIPTORS	b. IDENTIFIERS/OPEN ENDED TERMS	c. COSATI FIELD/GROUP
OZONE CONTROL STATEGIES NATIONAL AMBIENT AIR QUALITY STANDARDS NONMETHANE ORGANIC COMPOUND MONITORING ANALYSIS 1992 NMOC MONITORING PROGRAM		

18. DISTRIBUTION STATEMENT UNLIMITED		21. NO. OF PAGES 506
		22. PRICE