federal register

Monday
July 3, 1995

Part II

Environmental Protection Agency

40 CFR Parts 9 and 90

Control of Air Pollution; Emission for New Nonroad Spark-ignition Engines At or Below 19 Kilowatts; Final Rule

ENVIRONMENTAL PROTECTION AGENCY

40 CFR Parts 9 and 90

[FRL–5217–6]

RIN 2060–AF78

Control of Air Pollution; Emission Standards for New Nonroad Spark-ignition Engines At or Below 19 Kilowatts

AGENCY: Environmental Protection Agency (EPA).

ACTION: Final rule.

SUMMARY: This action establishes the first phase of regulations to control emissions from new nonroad spark-ignition engines at or below 19 kilowatts (25 horsepower). Regulatory requirements will for the first time control emissions from these engines, which cause or contribute to nonattainment of National Ambient Air Quality Standards for carbon monoxide (CO) and ozone. These engines are used principally in lawn and garden equipment. The new standards are expected to result in a 32 percent reduction in hydrocarbon (HC) emissions and a 7 percent reduction in CO emissions from these engines in the year 2020, when complete fleet turnover is projected. A second phase of regulations addressing emissions from these engines is currently under development.

EFFECTIVE DATE: This rule becomes effective on August 2, 1995. The incorporation by reference of certain publications listed in the regulations is approved by the Director of the Federal Register as of August 2, 1995.

ADDRESSES: Materials relevant to this rulemaking are contained in EPA Air Docket LE–131: Docket No. A–93–25 at the U.S. Environmental Protection Agency, room M–1500, 401 M Street SW., Washington, DC 20460. The docket may be inspected at this location from 8:30 a.m. until 5:30 p.m. weekdays. The docket office also may be reached by telephone: (202) 260–7548 (or fax (202) 260–4400). As provided in 40 CFR part 2, a reasonable fee may be charged by EPA for photocopying.

FOR FURTHER INFORMATION CONTACT: Lisa Snapp, Office of Mobile Sources, Certification Division, (313) 741–7900.

An informational workshop will be held at 10 a.m. on Thursday, August 10, 1995, at the Sheraton Inn, 3200 Boardwalk, Ann Arbor, Michigan; for more information, contact Linda Zirkelbach, Office of Mobile Sources, Certification Division, (313) 668–4567.

SUPPLEMENTARY INFORMATION:

Table of Contents

I. Obtaining Copies of Documents
II. Legal Authority and Background
III. Description of the Action
  A. Overview
  B. General Enforcement Provisions
  C. Program Description
IV. Public Participation
  A. Model Year Definition and Effective Date
  B. Definition of Handheld Equipment, Snowthrowers, and Two-stroke Lawnmowers
  C. Requirements Applicable to Vehicle and Equipment Manufacturers
  D. CO Standard
  E. Labeling
V. Environmental Benefit Assessment
VI. Economic Effects
  A. Industry Cost Impacts
  B. Consumer Cost Impacts
  C. Cost-Effectiveness
VII. Administrative Requirements
  A. Administrative Designation and Regulatory Analysis
  B. Paperwork Reduction Act
  C. Unfunded Mandates Act
  D. Regulatory Flexibility Act

I. Obtaining Copies of Documents

The proposed regulatory language (which was not published with the notice of proposed rulemaking for this rule), the final rulemaking (both preamble and regulatory language), the Regulatory Support Document (RSD), and the Response to Comments (RTC) are available electronically on the Technology Transfer Network (TTN). TTN is an electronic bulletin board system (BBS) operated by EPA's Office of Air Quality Planning and Standards. Users are able to access and download TTN files on their first call. After logging onto TTN BBS, to navigate through the BBS to the files of interest, the user must enter the appropriate command at each of a series of menus. The steps required to access information on this rulemaking are listed below. The service is free, except for the cost of the phone call.

TTN BBS: 919–541–5742 (1,200–14,400 bps, no parity, eight data bits, one stop bit)
Voice help: 919–541–5384;
Internet address: TELNET ttnbbs.rtpnc.epa.gov;
Off-line: Mondays from 8:00–12:00 Noon ET;
1. Technology Transfer Network Top Menu;
<T> GATEWAY TO TTN TECHNICAL AREAS (Bulletin Boards);
Command: T;
2. TTN TECHNICAL INFORMATION AREAS;
<M> OMS—Mobile Sources Information;
Command: M;
3. OMS BBS ==== MAIN MENU;
FILE TRANSFERS;
<K> Rulemaking & Reporting;
Command: K;
4. RULEMAKING PACKAGES;
<6> Non-Road;
Command: 6;
5. Non-Road Rulemaking Area;
File area # 2 . . . Non-Road Engines;
Command: 2<CR>;
6. Non-Road Engines.

At this stage, the system will list all available nonroad engine files. To download a file, select a transfer protocol which will match the terminal software on your own computer, then set your own software to receive the file using that same protocol.

If unfamiliar with handling compressed (that is, ZIP'ed) files, go to the TTN top menu, System Utilities (Command: 1) for information and the necessary program to download in order to unZIP the files of interest after downloading to your computer. After getting the files you want onto your computer, you can quit TTN BBS with the <G>oodbye command.

II. Legal Authority and Background

Authority for the actions set forth in this rule is granted to EPA by sections 202, 203, 204, 205, 206, 207, 208, 209, 213, 215, 216, and 301(a) of the Clean Air Act as amended (''CAA'' or ''Act'') (42 U.S.C. 7521, 7522, 7523, 7524, 7525, 7541, 7542, 7543, 7547, 7549, 7550, and 7601(a)).

On May 16, 1994, the Agency published a Notice of Proposed Rulemaking (NPRM) for this rule.[1] That proposed rule contains substantial information relevant to the matters discussed throughout this final rule. The reader is referred to that document for additional background information and discussion of various issues.

The Nonroad Engine and Vehicle Emission Study[2] (''Nonroad Study'') required by section 213(a)(1) of the Act was completed in November 1991. The Agency was required by section 213(a)(2) of the Act to determine whether emissions of CO, oxides of nitrogen (NO_X), and volatile organic compounds (VOCs) from new and existing nonroad engines, equipment, and vehicles are significant contributors to ozone and CO concentrations in more than one area that has failed to attain the national ambient air quality standards for ozone and CO. This significance determination was finalized

[1] 59 FR 25399 (May 16, 1994).

[2] The Nonroad Study is available in EPA Air Docket #A–91–24. It is also available through the National Technical Information Service, referenced as document PB 92–126960.

on June 17, 1994 (59 FR 31306) and is incorporated by reference into this final rulemaking. In that same **Federal Register** notice, the first set of regulations for a class or category of nonroad engines that cause or contribute to such air pollution, required by section 213(a)(3), was promulgated for new nonroad compression-ignition (CI) engines at or above 37 kilowatts (kW). Today's action continues to implement section 213(a)(3) by establishing emission standards and other requirements for another class or category of nonroad engines that causes or contributes to such air pollution: nonroad spark-ignition (SI) engines at or below 19 kW, hereafter referred to as ''small SI engines.''

These standards reflect the greatest degree of emission reduction achievable through the application of technology that EPA has determined will be available for small SI engines, considering the cost of applying such technology within available lead time and noise, energy, and safety factors associated with such technology.

According to the Nonroad Study, nonroad engines, equipment, and vehicles contribute an average of 10 percent of summer VOCs in the nineteen ozone nonattainment areas included in the study. Small SI engines are the source of half of those nonroad summer VOC emissions. In the sixteen CO nonattainment areas included in the study, nonroad engines, equipment, and vehicles account on average for 9 percent of winter CO emissions. Small SI engines are the source of 56 percent of the nonroad winter CO contribution, according to the study.

The Agency initiated a convening process to determine the best way to work with industry and other interested parties in developing regulations for small SI engines. The conveners interviewed individuals in leadership roles in key organizations to determine what parties were interested in these regulations, what issues were important to interested parties, and whether a consultative rulemaking process would be feasible and appropriate. The convening report recommended an exploratory meeting of interested parties to discuss a consultative process.[3] After two such meetings, it was suggested that EPA consider a two-phased approach to regulation of small SI engines. In the first phase, EPA would propose regulations for new small SI engines through the normal regulatory process rather than a consultative process. The Phase 1 regulations would be similar to the Regulation for 1995 and Later Utility and Lawn and Garden Equipment Engines issued by the California Air Resource Board (CARB), modified as necessary to meet CAA requirements (for example, EPA's proposal could modify CARB's program by including engines preempted from regulation in California). The Phase 1 proposal would be completed as soon as possible, but no later than spring of 1995. The second phase of regulation could be developed through the consultative process of regulatory negotiation, and could include issues such as useful life, in-use emissions, evaporative emissions, refueling emissions, test procedure, and market-based incentive programs. The Phase 2 negotiations were anticipated to begin in Fall 1993 and continue for approximately 18 months. The Agency decided to proceed with this phased approach.

The settlement of *Sierra Club v. Browner*, Civ. No. 93–0197 NHJ (D.D.C. 1993) required EPA to propose emission standards for small SI engines by April 1994 and to promulgate such standards by May 30, 1995. In accordance with the terms of the settlement, the EPA Administrator signed the Phase 1 NPRM on April 29, 1994; the NPRM was published on May 16, 1994 (59 FR 25399).

A public hearing was held on June 21, 1994. The close of the comment period on the NPRM was extended from July 15, 1994, to August 5, 1994.

III. Description of the Action

The general provisions of this rule are briefly described in this section.

A. Overview

This rule initiates federal regulation of emissions of HC, NO_X, and CO from certain new nonroad SI engines that have a gross power output at and below 19 kW.[4] A spark-ignition engine is an internal combustion engine in which the air/fuel mixture is ignited in the combustion chamber by an electric spark.

This rule has the following regulatory scheme:

- Designation of product lines into groups of engines with similar emission characteristics (such groups are called engine families),
- Manufacturer emission testing of selected engines with a specified test procedure to demonstrate compliance with new engine emission standards,
- Labeling of engines, and alternatively, equipment labeling if the engine label becomes obscured when placed in the equipment,
- Submission of an application for certification for each engine family,
- Inclusion of various certification requirements such as the prohibition of defeat devices,
- Issuance of an emission certificate of conformity for each engine family,
- Prohibition against offering for sale in the United States engines not certified by EPA,
- Requirement that equipment manufacturers use the appropriate handheld or nonhandheld certified engine in their equipment,
- Recordkeeping and reporting requirements,
- EPA Administrator testing provisions,
- Design warranty provisions and prohibition on tampering,
- Inclusion of all new farm and construction engines at or below 19 kW, state regulation of which is preempted under the CAA,
- Development of a voluntary engine manufacturer's program to evaluate in-use emission deterioration,
- Requirement that if catalysts are used in an engine family, catalyst durability must be confirmed by means of the evaluation procedure that is specified in this notice,
- Defect reporting and voluntary recall,
- Importation provisions,
- General prohibitions and enforcement provisions, and
- Production line Selective Enforcement Auditing (SEA). Certain elements of EPA's on-highway program are not being promulgated in this Phase 1 rule, including:
- No certification requirement for engine durability demonstration,
- No performance warranty,
- No averaging, banking, and trading program, and
- No useful life determination, in-use standards,[5] nor mandatory recall.

B. General Enforcement Provisions

As authorized in the CAA, EPA will enforce nonroad standards in a manner similar to on-highway standards. Section 213(d) of the Act provides that the standards promulgated under section 213 ''shall be subject to sections [206, 207, 208, and 209], with such modifications of the applicable regulations implementing such sections

[3] A copy of the convening report, dated August 24, 1992, is available in the docket for this rulemaking.

[4] To convert kilowatts to horsepower multiply kW by 1.34 and round to the same number of significant digits. For example, 3.5 kW * 1.34 = 4.7 hP.

[5] However, 40 CFR 90.105 specifies that a useful life period will be promulgated by 1997. In-use standards and enforcement are expected to be included in Phase 2.

as the Administrator deems appropriate, and shall be enforced in the same manner as standards prescribed under section [202].''[6] Section 206 specifies requirements for motor vehicles and motor vehicle engine compliance testing and certification. Section 207 requires manufacturers to warrant compliance by motor vehicles and motor vehicle engines in actual use. Section 208 requires recordkeeping by manufacturers of new motor vehicles or new motor vehicle engines and authorizes EPA to collect information and require reports. Finally, section 209 preempts states or any political subdivisions from enforcing standards relating to control of emissions, certification, inspection, or any other approval relating to the control of emissions of new motor vehicles or new motor vehicle engines, unless specifically authorized to do so by EPA. Section 209 also preempts states or any political subdivision from enforcing any standard or other requirement relating to the control of emissions from new nonroad engines or new nonroad vehicles.

Pursuant to this authority, EPA is in today's action promulgating regulations that require manufacturers of new small SI engines to obtain certification and that subject them to Selective Enforcement Auditing. Any manufacturer of a new small SI engine is responsible for obtaining from the Administrator a certificate of conformity covering any engine introduced into commerce in the United States.

The Agency is also finalizing general enforcement provisions and certain prohibited acts similar to those established for on-highway vehicles under sections 203, 204, 205, and 208 of the CAA. Section 203 specifies prohibited acts; section 204 provides for federal court injunctions of violations of section 203(a); section 205 provides for assessment of civil penalties for violations of section 203; and section 208 provides the Agency with information collection authority. The general enforcement language of section 213(d) provides the Agency's authority for applying sections 203, 204, 205, 206, and 208 of the CAA to new small SI engines and equipment.

As applied to nonroad engines, vehicles, and equipment under section 213(d), Phase 1 prohibited acts include, but are not limited to:

- An engine manufacturer's introduction into commerce of new small SI engines that are not covered by a certificate of conformity issued by EPA,
- The introduction into commerce of new small SI equipment and vehicles that do not incorporate the appropriate nonhandheld or handheld certified nonroad engine,
- Tampering with emission control devices or elements of design installed on or in a small SI engine, and
- Failure to provide information to the Agency if requested.

The Agency is also establishing regulations, under the authority of section 205 of the Act, which set forth the maximum statutory penalties for violating the prohibitions.

The Agency is promulgating general information collection provisions similar to current on-highway provisions under section 208 of the Act which include, but are not limited to, the manufacturer's responsibility to provide information to EPA, perform testing if requested by EPA, and maintain records. In addition, emission system defect reporting regulations require manufacturers to report to EPA specific emission system-related defects that affect a given class or category of engines. Agency enforcement personnel are authorized to gain entry and access to various facilities under section 208 and today's action includes these entry and access provisions.

This rule's information requirements are similar to those set forth in the nonroad large CI rule,[7] but are reduced from the on-highway program requirements.

The Agency is authorized under section 217 of the CAA to establish fees to recover compliance program costs associated with sections 206 and 207. In the future EPA will propose to establish fees for this nonroad compliance program, after determining associated costs of the compliance program.

C. Program Description

This section describes several features of EPA's Phase 1 small SI engine and vehicle and equipment compliance program. Some specific issues related to the program which require in-depth discussion are highlighted in section IV. of this preamble (''Public Participation''); all issues commented upon are addressed in detail in the Response to Comments document, located in the docket. In particular, the Response to Comments document should be consulted for more information dealing with issues that are not discussed under the Public Participation section of this document but that have seen a significant change in EPA position between the NPRM and the final rule (specifically, the selection of the worst-case emitter, the voluntary in-use testing program, the absence of a cap on noise, and the catalyst durability requirements).

1. Applicability

This rule applies to new nonroad SI engines that have a gross power output rated at or below 19 kW and are manufactured during or after the 1997 model year, for use in the United States. The scope of this rule encompasses a broad range of small SI engine applications, including farm and construction equipment, which individual states are preempted from regulating under section 209(e)(1) of the CAA. New engines that are covered by this rule are used in a large and varied assortment of vehicles and equipment including lawnmowers, string trimmers, edgers, chain saws, commercial turf equipment, small construction equipment, and lawn and garden tractors.

2. Scope: Exemptions and Exclusions

Pursuant to section 203(b)(1) of the CAA, the Agency is promulgating exemptions and exclusions from this new small SI engine regulation similar to those existing for on-highway engines and nonroad large CI engines. Nonroad engines used solely for competition or combat are excluded from regulation in accordance with the CAA. Exemptions have been established for purposes of research, investigations, studies, demonstrations, training, or for reasons of national security. Such exemptions may be obtained either categorically, that is without application to the Administrator, or by submitting a written application to the Administrator. Export exemptions and manufacturer-owned engine exemptions will be granted without application. Testing exemptions, display exemptions, and national security exemptions must be obtained by application.

The rule also explicitly limits its coverage such that it does not extend to the small SI engines described below:

(1) Engines used to propel marine vessels, as defined in the General Provisions of the United States Code, 1 U.S.C. 3 (1992); this definition of ''vessel'' includes every description of watercraft or other artificial contrivance used, or capable of being used, as a means of transportation on water[8];

(2) Engines used in underground mining or engines used in underground mining equipment and regulated by the Mining Safety and Health

[6] 42 U.S.C. 7547(d).

[7] 59 FR 31306 (June 17, 1994).

[8] The Agency proposed appropriate methods of regulating emissions from these engines separately; the NPRM was published on November 9, 1994 at 59 FR 55930.

Administration (MSHA) in 30 CFR parts 7, 31, 32, 36, 56, 57, 70, and 75;

(3) Engines used in motorcycles and regulated in 40 CFR part 86, subpart E;

(4) Engines used in aircraft, as that term is defined in 40 CFR 87.1(a);

(5) Engines used in recreational vehicles. Recreational vehicles are defined as engines which have no speed governor and which have a rated speed of greater than or equal to 5,000 revolutions per minute (rpm). Engines used in recreational vehicles, by definition, are not used to propel marine vessels, and they cannot be capable of meeting the criteria to be categorized as a Class III, IV, or V engine under this rule.

3. Model Year and Effective Date

The model year definition employed for the engines covered by this rulemaking is the same as that employed for on-highway certification. A model year includes January 1 of the calendar year for which it is designated, but does not include a January 1 for any other calendar year. The maximum duration of a model year is one calendar year plus 364 days.

This rule is effective with model year 1997. A manufacturer may choose to produce both certified engine families and uncertified engine families during annual production periods that start before September 1, 1996. Annual production periods commencing prior to September 1, 1996 must not exceed twelve months in duration; this limitation is only applicable for the start-up of this program. Engines manufactured in a production period commencing on or after September 1, 1996 must be certified. The sole exception among regulated engines is for Class V engines that are preempted from regulation in the State of California; for these engines, the effective date of the rule is January 1, 1998.

New replacement engines manufactured after the applicable effective date are subject to this rule. The Agency is not establishing a separate effective date for nonroad equipment and vehicle manufacturers. However, as long as they do not stockpile noncertified engines, equipment and vehicle manufacturers may continue to use noncertified engines built prior to the effective date until noncertified engine inventories are used up.

4. Engine Classes

Engine classes are specified both by engine displacement, as measured in cubic centimeters (cc), and by the type of equipment the engine powers—either handheld or nonhandheld. There are five engine classes covered by this rule. Each has a unique set of emission standards. Nonhandheld engine classes are: Class I—engines less than 225 cc in displacement; and Class II—engines greater than or equal to 225 cc in displacement. Engines powering equipment defined as handheld are classified as Class III: engines less than 20 cc in displacement, or Class IV: engines equal to or greater than 20 cc and less than 50 cc in displacement, or Class V: engines equal to or greater than 50 cc in displacement. The emission standards promulgated today are considered Phase 1 new small SI engine standards.

5. Handheld Engine Qualifications

Small SI engines are categorized as either handheld or nonhandheld, depending on the use of the equipment in which the engine is installed. A handheld engine must meet at least one of the following four conditions:

(1) The engine must be used in a piece of equipment that is carried by the operator throughout the performance of the intended function(s).

(2) The engine must be used in a piece of equipment that must operate multipositionally, such as upside-down and/or sideways, to meet its intended function(s).

(3) The engine must be used in a one-person auger for which the combined engine and equipment dry weight is under 20 kilograms (kg).

(4) The engine must be used in a piece of equipment, other than an augur, for which the combined engine and equipment dry weight is under 14 kg, no more than two wheels are present, and at least one of the following attributes is also present:

- The operator must alternately provide support or carry the equipment throughout the performance of its intended function(s).
- The operator must provide support or attitudinal control for the equipment throughout the performance of its intended function(s).
- The engine is used in a hand portable generator or pump.

6. Emission Standards

Under this rule, exhaust emissions from new nonroad small SI engines must not exceed the standards applicable to their engine families based on their engine class, as listed in Table 1.

TABLE 1.—EXHAUST EMISSION STANDARDS

Engine characteristics			Pollutant (gram per kilowatt-hour)			
Class	Application	Displacement (cubic cm)	HC + NO_X	HC	CO	NO_X
I	Nonhandheld	<225	16.1		469	
II	Nonhandheld	≥225	13.4		469	
III	Handheld	<20		295	805	5.36
IV	Handheld	≥20, <50		241	805	5.36
V	Handheld	≥50		161	603	5.36

The Agency is providing exceptions to nonhandheld standards for engines used in two types of nonhandheld equipment. Engines used in two-stroke snowthrowers and engines used in two-stroke lawnmowers are allowed to comply with the handheld standards. In addition, the number of two-stroke lawnmower engines allowed to meet handheld standards is subject to a declining annual production cap; any excess annual production would have to meet nonhandheld standards. Moreover, manufacturers of engines used exclusively in snowthrowers and ice-augers will be required to certify to and comply with only the applicable nonhandheld or handheld CO standard, and will not have to meet the HC standards, either nonhandheld or handheld, unless they opt to certify to those standards. The Agency has decided to finalize the combined HC + NO_X standard for Classes I and II while requiring that the individual test results for HC and NO_X also be submitted, as proposed.

The Agency has not addressed standards for air toxics in this action.

7. Engine Family Categorization

For the purpose of demonstrating emission compliance, EPA is requiring that manufacturers of small SI engines divide their product line into groups of engines, called engine families, which are composed of engines having identical physical characteristics and similar emission characteristics. Small SI engine families are determined by using the same criteria currently used to define on-highway motorcycle engine families.

To be placed in the same engine family, engines are required to be identical in all the following applicable respects:

(1) Combustion cycle;

(2) Cooling mechanism;

(3) The cylinder configuration (inline, vee, opposed bore spacings, and so forth);

(4) The number of cylinders;

(5) The engine class;

(6) The number of catalytic converters (location, volume, and composition), and

(7) The thermal reactor characteristics.

At the manufacturer's option, engines identical in all the above respects could be further divided into different engine families if the Administrator determined that such engines were expected to have different emission characteristics. This determination would be based on a number of features, such as the intake and exhaust valve or port size, the fuel system, exhaust system, and method of air aspiration.

8. Certificate of Conformity, Requirements of Certification

Each manufacturer of a new nonroad small SI engine is responsible for obtaining from the Administrator a certificate of conformity covering any engine introduced into commerce in the United States, before such engine is sold, offered for sale, introduced or delivered for introduction into commerce, or imported into the United States.

Section 203 of the CAA does not prohibit the production of engines, vehicles, or equipment before a certificate of conformity is issued. An engine, a vehicle, or equipment may be covered by the certificate provided:

- The engine conformed in all material respects to the engine described in the application for the certificate of conformity, and
- The engine, vehicle, or equipment was not sold, offered for sale, introduced into commerce, or delivered for introduction into commerce prior to the effective date of the certificate of conformity.

The Agency has established a number of requirements that an engine manufacturer must satisfy prior to granting a certificate of conformity. Engines equipped with adjustable operating parameters must comply with all the applicable emission standards over the full range of operating parameters and adjustments. Use of any device on a nonroad engine which senses operation outside normal emission test conditions and reduces the ability of the emission control system to control the engine's emissions is a prohibited act that is subject to civil penalties.

Use of defeat devices is a prohibited act subject to civil penalties. The Agency reserves the right to require testing of a certification test engine over a modified test procedure if EPA suspects a defeat device is being used by an engine manufacturer on a particular engine.

Finally, EPA is requiring that all engine crankcases be closed to preclude the emissions that occur when a crankcase is vented to the atmosphere. Since most currently produced engines do have closed crankcases, EPA believes this requirement will impact relatively few manufacturers.

9. Certification Procedures—Application Process

Each engine manufacturer must submit an application to EPA requesting a certificate of conformity for each engine family for every model year. The Agency will issue certificates to cover production for a single model year. An application must be submitted every model year even when the engine family does not change from the previous certificate, although representative test data may be reused in the succeeding model year's application.

The test engine(s) representing an engine family must demonstrate that its emissions are less than or equal to each separate emission standard. If the emissions from the test engine are below the applicable standards and all other requirements of the regulation are met (including the information required in 40 CFR part 90), EPA will issue a certificate of conformity for that engine family.

The application must provide EPA with sufficient information to assess the appropriate test results and determine the physical and emission characteristics of the engine family, as well as compliance with the applicable emission standards. It is important that the engine manufacturer succinctly, fully, and accurately submit all pertinent information to EPA and maintain internal records which can be easily accessed if such access is determined to be necessary by EPA.

If changes to an engine family configuration occur after the application is submitted which cause the changed version to be the engine family's worst case emitter, then emission testing of the changed version is required. Additionally, the Administrator may require a manufacturer to conduct testing of a changed version that is not a worst case emitter to demonstrate compliance.

10. Certification Procedures—Testing Overview and Preliminaries

The emission level used to certify an engine family must be equal to the highest emission test level reported for any engine configuration in that family. The engine manufacturer is responsible for selecting and testing one engine from each engine family which is most likely to be that engine family's worst case emitter. The Agency expects that the worst case engine would normally be that engine configuration which has the highest weighted brake-specific fuel consumption over the certification test cycle, but will allow the manufacturer to submit data from another engine if it can support its contention that the alternative engine represents the worst case emitter. The Agency may verify the test results by requiring Administrator testing of this engine, or it may opt to test any available test engine representing other configurations in the engine family if it believes the manufacturer did not make a good faith effort to select the worst case emitter.

Before the manufacturer carries out emission testing, it must perform a number of hours of service accumulation on each test engine over the dynamometer cycle of its choice, based on good engineering practices (for example, an operational cycle representative of typical ''break-in'' of a new production engine in actual use). For each engine family, the manufacturer must determine the number of hours required to stabilize the emissions of the test engine, but this stabilization period cannot exceed twelve hours. The manufacturer must maintain and provide in its application to the Administrator a record of the rationale used both in making the dynamometer cycle selection and in making the service accumulation hours determination.

The manufacturer must conduct emission tests of the selected engine(s) using the test procedure established in 40 CFR part 90. However, this rulemaking does provide for EPA review and approval of special test procedures if the small SI engine is not capable of

being satisfactorily tested under the established test procedures.

The Agency does not require engine manufacturers to maintain any certification test engine after a certificate has been granted; however, the manufacturer may find it useful to do so for future showings to EPA. For example, a manufacturer may use such engines for back-to-back testing when running changes occur and the manufacturer wishes to show that no significant emissions impact has resulted.

11. Certification Procedures—Fuels

For the purposes of Phase 1 nonroad small SI compliance testing, EPA has decided to allow the optional use of Indolene fuel in addition to the Clean Air Act Baseline (CAAB) fuel that was specified in the proposal. (Indolene is the trade name for the fuel specified at 40 CFR 86.113 for most light-duty compliance test procedures, referred to as ''Otto-cycle test fuel'' in the regulations.) Since the CARB regulation allows the use of either Indolene or Phase 2 fuel, a test performed using Indolene could be used to satisfy both federal and CARB requirements for small SI engines. The Agency reserves the right to perform confirmatory testing as well as selective enforcement audits on either CAAB or Indolene, regardless of which fuel the manufacturer chooses for its data submittal.

This rule sets forth no special standards nor test procedures for engines that utilize fuels other than gasoline. These regulations apply regardless of the fuel utilized by a small SI engine, so long as the engine otherwise meets the criteria for coverage under this rule. The Agency will consider whether additional guidance or regulation is appropriate regarding any relevant issues brought to its attention concerning engines that use fuels other than gasoline. The Agency requests that such concerns be relayed to EPA as they arise.

The Agency may revisit the fuel specifications issue in a future small nonroad engine rulemaking, depending upon the standards and technology anticipated to be necessary for compliance.

12. Certification Procedures—Emission Test Procedure for HC, CO, and NO_X

The rule establishes a single test procedure that includes a test cycle for measuring HC, CO, and NO_X. There are three different cycles available: one cycle applies to all Class III, IV, and V engines (Cycle C), while two cycles are permissible for use with Class I and II engines (Cycles A and B).

Cycle B can be used for those Class I and II engine families in which 100 percent of the engines are sold with a governor that maintains engine speed within ± 2 percent of rated speed (the manufacturer-specified maximum power of an engine) under all operating conditions. Cycle B is a six-mode steady state cycle consisting of five power modes at rated speed and one no-load mode at idle speed. For all other Class I and II engines, Cycle A is required. Cycle A is identical to Cycle B, except the five power modes are run at intermediate engine speed (85 percent of rated speed).

The engine manufacturer must use Cycle C for engines falling into Classes III, IV, and V. Cycle C is a two-mode steady state cycle consisting of one power mode (at rated speed) and one no-load mode at idle speed. The test modes for each cycle must be run in a prescribed order.

The methods used to measure the gaseous emissions of HC, CO, and NO_X for all small engines are independent of engine type and test cycle. Manufacturers may sample emissions using either the Raw Gas Method or the Constant Volume Sampling Method. Using either method, each test engine must be stabilized at each mode before emission measurement began. After stabilizing the power output during each mode, the concentration of each pollutant, exhaust volume, and fuel flow is determined. The measured values are weighted and then used to calculate the grams of exhaust pollutant emitted per kilowatt-hour.

13. Confirmatory Testing Options

The Agency's confirmatory testing provisions set forth in this rule allow EPA flexibility in determining when and where engine testing may occur. The Agency may require confirmatory engine testing at any given location, including at a manufacturer's facility, and may also require the manufacturer to make available specified instrumentation and equipment. Any testing conducted at a manufacturer's facility must be scheduled by the manufacturer as promptly as possible. Authorized EPA personnel must be given access to the facilities to observe such testing.

14. Retention of Information; Amendments to the Application

The manufacturer is responsible for retaining certain information applicable to each test engine, along with copies of the submitted applications for individual certificates of conformity. The manufacturer must also submit an amendment to the application or certificate of conformity whenever additional small SI engines are added to an engine family or changes are made to a product line covered by a certificate of conformity. Notification normally would occur prior to either producing such engines or making such changes to a product line.

15. Selective Enforcement Auditing Program

The small SI engine SEA program, authorized by CAA section 213, is an emission compliance program for new production nonroad engines that allows EPA to issue an SEA test order for any engine family for which EPA has issued a certificate of conformity. Failure of an SEA may result in suspension or revocation of the certificate of conformity for that engine family. To have the certificate reinstated subsequent to a suspension, or reissued subsequent to a revocation, the manufacturer must demonstrate by showing passing data that improvements, modifications, or replacements have brought the family into compliance. The manufacturer may challenge EPA's suspension or revocation decision based on application of the sampling plans or the manner in which tests were conducted.

16. No Useful Life Period, In-use Enforcement, or Mandatory In-use Testing Program

The final rule does not determine a small SI engine useful life period or establish an in-use enforcement program. However, as further explained in the Response to Comments document, the Agency is allowing a voluntary in-use testing program modeled on the testing program it proposed in the NPRM. The Agency will not require approval of in-house test programs voluntarily created by manufacturers nor creation of such programs. Instead, the Agency will provide guidance according to the testing program proposed in the NPRM to those manufacturers who choose to conduct a program by which they could test a sample of engines while in-use.

Although EPA has promulgated no in-use emission standards for Phase 1 engines, it anticipates that manufacturers would take appropriate actions to prevent recurrence of in-use noncompliance should it be discovered. Voluntary in-use testing will not be a requirement that needs to be fulfilled under a conditional certificate program. Therefore, the conditional certificate program that was proposed for Phase 1 is not being adopted.

One commenter suggested that a voluntary testing program be developed

in place of a mandatory program to develop meaningful data. EPA agrees that this type of a program is more appropriate for Phase 1 and will allow manufacturers to become familiar with an in-use testing program. Because the Agency has chosen not to promulgate an in-use standard or useful life period within this rule, it has decided that a mandatory in-use testing program conducted by manufacturers is unnecessary at this time.

17. Labeling

The engine manufacturer is responsible for proper labeling of engines from each engine family. Manufacturers must label every engine covered by this rulemaking, but they are not required to supply unique numbers for each engine. The label indicates that the engine can meet the standards appropriate to its class.

The Agency has decided that an engine label that meets the labeling requirements for engines sold in the state of California will be accepted as meeting federal labeling requirements, provided the label states that it meets federal standards.

This action also requires that equipment and vehicle manufacturers apply a supplemental label to the equipment or vehicle if the engine label is obscured.

18. Importation Restrictions

Nonconforming small SI engines, vehicles, and equipment will generally not be permitted to be imported for purposes of resale, except as specifically permitted by this action. This rule provides certain exemptions for various reasons, including repairs and alterations, testing, pre-certification, display, national security, and hardship. In addition, nonconforming small SI engines that are exempted from importation restrictions include engines greater than 20 original production years old, engines used solely in competition, and certain engines proven to be identical, in all material respects, to their corresponding United States certified versions.

Today's action will permit individuals to import on a single occasion up to three nonconforming small SI engines, vehicles, or equipment items for personal use (and not for purposes of resale). After an individual's limit of three, or after the first importation, additional small SI engines, vehicles, or equipment will not be permitted to be imported under this rule unless otherwise provided under another exemption or exclusion.

The Agency has also decided not to establish an independent commercial importers (ICI) program for small SI engines.

19. Defect Reporting and Voluntary Recall

The Agency is adopting the proposed emission defect reporting regulations which require a manufacturer to report emission-related defects that affect a given class or category of small SI engines whenever it identifies the existence of a specific emission-related defect in twenty-five or more engines in a single engine family manufactured in the same model year. However, no report need be filed with EPA if the defect is corrected prior to the sale of the affected engines to the ultimate purchaser.

The Agency requires that individual manufacturers establish voluntary recall programs, when appropriate. It has established limited guidelines for engine manufacturers to follow when undertaking such a program.

20. Emission Defect Warranty Requirements

The emission defect warranty will be provided by engine manufacturers for the first two years of engine use, which is harmonious with the two-year warranty period set forth in California's lawn and garden regulations. The warranty requirements are consistent with emission defect warranty policies developed for on-highway vehicles, located in section 207(a) of the Act. Manufacturers of new nonroad engines must warrant to the ultimate purchaser and each subsequent purchaser that such engine was (1) designed, built, and equipped so as to conform at the time of sale with applicable regulations under section 213 of the Act, and (2) free from defects in materials and workmanship which cause such engine to fail to conform with applicable regulations for its warranty period.

21. Prohibited Acts; Tampering

The Agency is adopting provisions that will prohibit introducing engines into commerce in the United States which are not covered by a certificate of conformity issued by EPA. Additionally it will be a prohibited act to use a regulated but uncertified nonroad engine in nonroad vehicles or equipment. It is also a prohibited act for any person to tamper with any emission-related component or system installed on or in a small SI engine. The Agency has applied the existing policies developed for on-highway tampering to engines included in this rule. (See Office of Enforcement and General Counsel; Mobile Source Enforcement Memorandum No. 1A, June 25, 1974.[9])

Adjustments outside of manufacturer's suggested parameters, installation of replacement parts, or installation of add-on parts might not necessarily be considered to be tampering so long as regulated emissions do not increase and engine durability is not adversely impacted as a result of such adjustments, replacement parts, or add-on parts. For example, a manufacturer may install conversion kits so that engines are capable of utilizing alternative fuels if testing has been conducted according to the procedures specified in subpart E of part 90 to ensure that regulated emissions will not increase as a result of the conversion and use of alternative fuels. A manufacturer is not required to send documentation that emissions do not increase to EPA, but should be able to provide such documentation upon request. EPA's tampering enforcement policy memorandum cited above addresses these issues and should be used as a reference to determine whether they constitute tampering or are allowable under the provisions of this rule.

22. Catalyst Durability

Although EPA has not established full emission control system durability demonstration requirements in the rulemaking, it expects manufacturers to design such systems to be durable; that is, to be effective in realizing emission reduction benefits under normal in-use operating conditions not only when the engines are new, but also during operation in-use, over time. While full emission control system durability demonstration requirements are expected to be included in the Phase 2 regulations for small SI engines, EPA has concerns that certain emission control components, namely catalysts, warrant separate consideration.

Therefore, EPA is adopting durability demonstration requirements for catalysts in this rule. If catalysts are used in an engine family to meet the emission standards of this regulation, the engine manufacturer must affirm that the durability of the catalysts has been confirmed on the basis of the evaluation procedure that is specified in this rulemaking. The requirements adopted by EPA differ in some ways from the proposal (regarding thermal stress testing requirements, exhaust gas composition for testing of three-way catalysts, and deterioration limits) that are discussed in more detail in the Response to Comments.

[9] EPA Air Docket #A–93–25, item II-B–01.

23. No Cap on Noise

While EPA proposed that noise produced by new small SI engines would not be allowed to increase over current levels as a result of the proposed emission standards, it has decided not to promulgate such a requirement. Although EPA continues to believe noise control is important, without standards and test procedures, such a requirement is not enforceable. The Agency expects that the types of modifications to current engine design that will be performed to assure compliance with emission standards will not impact noise levels. However, EPA may regulate engine noise if it becomes aware that noise levels do actually increase subsequent to promulgation of this rulemaking.

24. No Averaging, Banking, and Trading Program

This rule does not extend averaging, banking, and trading, nor any of the elements of such a program, to the certification program for the engines subject to this regulation. Averaging, banking, and trading are being discussed as options for Phase 2.

IV. Public Participation and Comment

The Agency received submissions during the comment period for the NPRM from thirty-three commenters. Copies of all of the written comments submitted to EPA, as well as records of all oral comments received during the comment period, can be obtained from the docket for this rule (see **ADDRESSES**).

This section responds to certain comments received from the public on major issues. The docket also contains a ''Response to Comments'' document that provides a more detailed summary of the comments, including many issues not covered in this preamble because they were minor or less contentious issues, and EPA's rationale for its responses.

A. Model Year Definition and Effective Date

This rule will become effective beginning with the 1997 model year. The Agency proposed an effective date of August 1, 1996 for implementation of this rulemaking. Regarding the definition of model year, EPA requested comment on three options: (1) a model year beginning August 1 and ending July 31 of the succeeding year, (2) a model year like that in the on-highway program, beginning January 2 of one year and ending December 31 of the succeeding year, and (3) a model year like that in the on-highway program, but beginning August 1 and ending July 31 of the second succeeding year.

Several states, associations of state and local air officials, and an environmental association supported an effective date of January 1, 1996. They noted that delayed implementation of this rule decreases the value of a phased approach to small engine regulation by eroding the near-term benefits of a program intended largely to provide near-term benefits. A state, an environmental association, and associations of state and local air officials that are participants in the regulatory negotiation for the second phase of small engine regulation stated that their agreement to participate in the negotiated rulemaking was based partly on a January 1, 1996 effective date for the Phase 1 rulemaking.

Several states and a manufacturer supported the proposed effective date of August 1, 1996. One state argued that manufacturers have had ample notice of the fact that they would be regulated, and that to delay would reward parties that have not devoted resources in good faith to develop cleaner engines. Another state commented that it would have to adopt California's regulation for SI engines under 25 horsepower to get the SIP credits it needs if the federal rule's effective date is delayed.

Several manufacturers and industry associations supported an August 1, 1997 effective date, citing lead time considerations. An association pointed out that the interval between promulgation of the final rule in May 1995 and the effective date of August 1, 1996 would provide only one year of lead time prior to implementation, which it considered to be insufficient for engine manufacturers to retool to achieve emission compliance for implementation of nationwide standards.

Another industry association and a manufacturer commented that an August effective date does not coincide with the production cycle for all engines covered by this rule; many operate on a calendar year basis. That association supported setting an effective date two years after California's regulations become effective (e.g., January 1, 1997) for products that are not preempted in California and an effective date two years after this Phase 1 rule takes effect (e.g., January 1, 1999) for products that are preempted in California. The association cited lead time concerns, particularly in regard to products that are preempted from regulation in California. One manufacturer supported a January 1998 effective date for engines used in products that are preempted from regulation in California, arguing that the additional lead time is critical to prevent disruptions in supply since most attention has been focused on engine development for non-preempted products.

Comments on the definition of model year were received from manufacturers and industry, state and local air officials, and an environmental association. All comments supported the on-highway model year definition.

The Agency has decided upon a model year 1997 effective date and has adopted the on-highway model year definition. The 1997 model year will run from January 2, 1996 to December 31, 1997.

The Agency acknowledges industry's need for sufficient lead time. It also acknowledges the need of states to realize reductions of air pollutant emissions, and to adhere to schedules mandated in the CAA for reasonable further progress toward VOC reductions from 1990 levels and for attainment of the National Ambient Air Quality Standard for ozone. The model year 1997 effective date provides additional lead time for those manufacturers that take advantage of the flexibility allowed by the model year definition; it also allows early introduction of complying products by manufacturers that are in a position to produce complying products earlier in the model year rather than later.

The Agency is allowing additional lead time for Class V engines covered by this rule that are used in farm and construction equipment or vehicles which CAA section 209(e)(1)(A) preempts from state regulation. The effective date for such Class V engines is January 1, 1998.

Under the final rule, the model year includes January 1 of the calendar year for which it is designated and does not include a January 1 of any other calendar year. The maximum duration of a model year is one calendar year plus 364 days. A certificate of conformity is issued for each engine family introduced into commerce for a single model year. The annual production period within a model year for any specific model within an engine family begins either: (1) when such engine is first produced, or (2) on January 2 of the calendar year preceding the year for which the model year is designated, whichever date is later. The annual production period ends either: (1) when the last such engine is produced, or (2) on December 31 of the calendar year for which the model year is named, whichever date is sooner.

Introducing a specific model year engine into commerce prior to or after the model year for which the certificate is issued and in effect is a prohibited act. However, in recognition of the fact

that some manufacturers will be in a position to ship certified engines prior to January 2, 1996, EPA is making an exception for engine families that are certified by EPA prior to January 2, 1996; such engine families may enter commerce prior to January 2, 1996, once a certificate of conformity has been issued. Engines produced after December 31 of the calendar year for which the model year is named are not covered by the certificate of conformity for that model year. A new certificate of conformity demonstrating compliance with applicable standards must be obtained for such engines, even if they are identical to engines built before December 31.

To provide maximum flexibility in the start-up of this program, the Agency is interpreting the Phase 1 model year definition somewhat differently than in the on-highway program. For the 1997 model year only, manufacturers may choose to produce both certified and uncertified engine families during annual production periods that begin prior to September 1, 1996. All engines manufactured during annual production periods that begin on or after September 1, 1996 must be certified. In addition, annual production periods that begin prior to September 1, 1996 may not exceed twelve months in length, to ensure that all engines are certified no later than calendar year 1997. The Agency has determined that flexibility in the interpretation of the model year definition for program start-up is necessary in fairness to manufacturers both to provide additional lead time and to account for the variability in production periods of the small SI engine industry.

For example, a manufacturer of lawnmower engines with an annual production period from July 1996 to June 1997 might choose to certify two-thirds of its engine families by July 1996, with the remainder of its production being uncertified. Normally, the manufacturer must certify all its engines in every annual production period; the enhanced flexibility provided by this special interpretation, which allows the manufacturer to choose when to begin certifying in production periods beginning before September 1, 1996, is for the start-up of this program only.

The lawnmower manufacturer in the example above may call the engine families certified in calendar year 1996 either model year 1996 or model year 1997 engines; the advantage to calling them model year 1997 engines is that they can then be built past December 31, 1996. Similarly, the lawnmower engine families certified in calendar year 1997 may be called model year 1997 or model year 1998 engines, but only model year 1998 engines may be built beyond December 31, 1997.

Another example is a string trimmer engine manufacturer that operates on a January to December production period. The manufacturer may choose to certify any portion of its engine families in January 1996, and must certify all its engine families in January 1997.

The Agency expects that manufacturers will federally certify a substantial number of engine families in calendar year 1996 to take maximum advantage of ''green'' marketing strategies. Most of the engine families covered by this regulation will already have been certified to California standards prior to model year 1997. No data are available for EPA to accurately predict the percentage of small engine families that will be certified in calendar year 1996. For purposes of state implementation plan submittals, EPA is estimating that half will be certified in calendar year 1996.

Under no circumstances should the model year definition be interpreted to allow existing models to ''skip'' annual certification by pulling ahead the production of every other model year. While this situation, to the Agency's knowledge, has not occurred in the past, a practice of producing vehicles or equipment for a two-year period would violate the Congressional intent of annual certification based upon an annual production period. The Agency is not currently setting forth rules for how to determine when abuse has occurred, since this has not been a problem to date. However, the Agency is requiring that engine manufacturers certify annually based on an annual production period.

B. Definition of Handheld Equipment, Snowthrowers, and Two-stroke Lawnmowers

1. Definition and General Provisions

The Agency proposed that small SI engines be categorized as either handheld or nonhandheld, depending on the usage of the equipment in which the engine is installed. To qualify as handheld, it was proposed that the engine be required to meet at least one of three criteria. In summary, the criteria are that the engine must be used in a piece of equipment that is carried by the operator; or that it is operate multipositionally; or that it is used in a two-wheeled piece of equipment having a combined engine and equipment dry weight under 14 kg and also has certain other specific attributes (for the criteria in detail, see section III.C.5. of this preamble, ''Handheld Engine Qualifications'').

Comments on this issue submitted by state and environmental organizations suggested that EPA tighten the definition to further limit the extent of the handheld category and prevent abuse of the classifications, while manufacturers and their organizations suggested loosening the definition to allow the equipment of concern to their group to fall into the handheld category.

The Agency is retaining its handheld equipment definition largely as proposed, with the only changes being the addition of a fourth category for one-person augers under 20 kg and the elimination of the term ''exclusively'' from the category for pumps and generators. Based on an extensive review of product literature, the Agency believes that this revised definition adequately describes those types of equipment that are legitimately handheld while excluding nonhandheld applications.

As described more fully in the preamble to the proposed rule, the necessity for a distinction between handheld and nonhandheld equipment is based in part on the substantial difference between emissions from current four-stroke and two-stroke engines, which is an inherent result of their design differences. Although two-stroke engines have significantly higher emissions, their use is necessary in some applications because they are generally lighter for the same rated power and can be used in any orientation, unlike their four-stroke counterparts. Of course, the Agency is not requiring the use of either two-stroke or four-stroke engines in any particular type of equipment. If technological advances are such that two-stroke engines can meet the nonhandheld standards, manufacturers are free to utilize that technology or any other technology that can meet the standards. The distinction between handheld and nonhandheld equipment is not to specifically limit the use of any type of engine but, rather, to limit emissions as much as is achievable while recognizing the unique needs of handheld applications.

The Agency is sympathetic to comments that it should coordinate its handheld definition with CARB. Nevertheless, it believes that its definition clarifies and expands on the CARB definition in ways important to the federal program. Given the different mandates of the two organizations and the specific air quality problems of the State of California, EPA believes it is not inappropriate for the definitions to be slightly different.

Also, an investigation into the types of equipment each definition would cover reveals that there is a very high degree of overlap. Equipment types considered by the EPA to be handheld include, but are not limited to, string trimmers, hedge clippers, brush cutters, hover mowers, leaf blowers, chain saws, clearing saws, and concrete, masonry, and cutoff saws.[10] These equipment types meet EPA's general definition of handheld equipment, while pumps, generators, snowthrowers,[11] edgers, cultivators, tillers, continuous diggers, and trenchers must be under 14 kg and have no more than two wheels to be considered handheld, and augers must be under 20 kg and be intended for one-person use to be considered handheld.

Some commenters suggested that equipment weighing 14 kg is too heavy to be handheld, but did not suggest an acceptable alternative weight. Others felt it was too light for an upper limit. The Agency agrees that 14 kg is indeed heavy for some uses and some consumers, but also believes that certain pieces of equipment at that weight would be used in a handheld manner (such as lightweight edgers and tillers). It is likely that market forces would limit the manufacture and sale of ''handheld'' equipment that is too heavy for the typical consumer of such products. Indeed, a review of product literature indicates that 14 kg appears to be the break point that the market has chosen between equipment types powered with two-stroke engines and those powered by four-stroke.[12] [13]

Additionally, for products not falling into the general handheld definition (that is, products not carried throughout use and not used multipositionally), a product weight of less than 14 kg is not sufficient to qualify as handheld. Such products are also limited to no more than two wheels and must need some degree of operator carrying, support or attitudinal control in order to qualify as handheld; that is, they must not be completely ground-supported. The Agency believes that these additional constraints will prevent true nonhandheld equipment from inadvertently falling into the handheld category.

On the other hand, the mere fact of some degree of ground support should not disqualify a piece of equipment from the handheld category. Some lightweight products requiring some level of ground support, including products with one or two wheels, would typically be considered handheld by the general public. Equipment such as lightweight snowthrowers, tillers and edgers with up to two wheels would require some carrying, support or attitudinal control; lawnmowers and three- and four-wheeled edgers, conversely, would be completely ground-supported and thus not handheld.[14]

Some commenters stated that pumps and generators under 14 kg should not qualify as handheld. The categorization was intended primarily for small pumps and generators that would be transported into remote areas, and is hereby retained. The State of California has a special provision allowing such equipment with non-certified engines to be purchased by emergency response organizations. The Agency is taking a somewhat different route toward a similar end, while making these pieces of equipment more widely available but subject to the handheld standards.

The Agency wishes to clarify that all pumps and generators under 14 kg with no more than two wheels will be categorized as handheld equipment. The phrase ''the engine is used exclusively in a generator or pump'' was not meant to preclude handheld status for pumps and generators with engine models that are also used in other pieces of handheld equipment. The Agency agrees that the term ''exclusively'' in the handheld definition is superfluous and it has been removed.

For this rule, only earth and ice augers that are under 20 kg (including a bit of typical size for that model) and are sold for use primarily by one person will be considered handheld.[15] Two person augers, and any auger of 20 kg or more (including the bit) must meet the nonhandheld standards. The Agency believes that this slight broadening of the definition reasonably responds to the needs of auger manufacturers to provide both a lightweight and a high-strength, high-power product during the time frame of the Phase 1 regulations. Light weight is important for one person to be able to counter the torque generated by the drilling operation, hold the auger vertically, lift it from the hole, and carry it to and from the drilling location. Also, in contrast to truly nonhandheld equipment, augers have no frame or wheels and, thus, require continuous operator support during use. In contrast to other equipment that is clearly handheld, however, augers are of a heavier construction to withstand greater forces during use, and are used for very short bursts of time, so that the 14 kg weight limitation is not applicable. A review of product literature and manufacturer comments indicate that an upper limit of 20 kg would include most or all one-person augers currently on the market.

Auger manufacturers are predominantly small companies and, therefore, are somewhat constrained in their ability to quickly re-engineer their product, acquire a new engine source, and absorb the costs of a four-stroke engine. It is for this reason, coupled with the technological reasons cited above, that the Agency is allowing one-person augers under 20 kg to meet the handheld definition for this Phase 1 regulation of small SI engines. However, this definition will not necessarily be carried into future regulation of small SI engines, such as in the Phase 2 negotiated rulemaking activities currently underway.

2. Snowthrowers

The Agency proposed that snowthrowers meeting the handheld definition be considered handheld equipment; all other snowthrowers would be considered nonhandheld. In general, industry either opposed regulating snowthrowers for HC emissions or favored relaxed emission standards for two-stroke snowthrowers, while environmental and state and local air officials' associations favored more stringent standards.

One industry commenter argued that EPA should at a minimum exempt snowthrowers from the hydrocarbon standards, since emissions from snowthrowers do not demonstrably contribute to summertime ozone

[10] The Agency is aware that concrete/masonry/cutoff saws are sometimes attached to carts for extended or heavy-duty cuts. This occasional use does not negate their overall status as handheld equipment. The Agency agrees with the comment that such saws are often used multipositionally, and thus fall into the general handheld category. Thus, the 14 kg weight limit does not apply. The same is true for hover mowers.

[11] Certain snowthrowers that do not meet the handheld definition are nevertheless allowed to meet the handheld, rather than nonhandheld, CO standards. Engines used exclusively in snowthrowers will not be required to meet the HC standards, either handheld or nonhandheld, unless manufacturers of these engines opt to certify to those standards. See below for further discussion.

[12] For augers, this break point is 20 kg.

[13] See note to docket summarizing product weights, dated 2/17/95, by Lisa Snapp, U. S. Environmental Protection Agency. (EPA Air Docket #A–93–25.)

[14] Additionally, the use of lawnmowers and, similarly, three- and four-wheeled edgers on hillsides is not considered to be multipositional use and, hence, they do not qualify as handheld equipment. Nevertheless, certain lawnmowers are allowed to meet the handheld, rather than nonhandheld, standards. See below for further discussion.

[15] All ice augers, whether or not they qualify as handheld, will not be required to meet the HC standards, unless manufacturers of engines used in those products certify to the HC standards. Under today's rule, ice augers will only be subject to the applicable handheld or nonhandheld CO standard. See below for further discussion.

nonattainment concentrations. According to the commenter, Phase I accomplishes no demonstrable purpose by regulating snowthrower hydrocarbon emissions, as snowthrowers are used exclusively during the winter and reductions achieved by regulating snowthrowers would have no benefit for areas seeking reductions in order to attain the ozone NAAQS during the high ozone season.

Industry commented that there are no snowthrowers with SI engines that weigh under 14 kg. As a result, all snowthrowers covered by the proposal would be subject to nonhandheld standards. According to industry, if snowthrowers with two-stroke engines must comply with nonhandheld standards, EPA would effectively be banning such equipment and placing an unreasonable hardship on that segment of industry. The Nonroad Study indicates that 26 percent of snowthrowers have two-stroke engines.

Industry offered three main lines of reasoning for the position that all two-stroke snowthrowers should be considered handheld. First, snowthrower manufacturers assumed that Phase 1 standards would mirror CARB's standards, including its special exceptions. Second, snowthrowers do not contribute to summer ozone nonattainment. Third, two-stroke snowthrowers have design, performance, and operational characteristics that fill a unique market niche, and have many of the attributes of handheld equipment.

The unique design, performance, and operational characteristics cited by industry include size, weight, maneuverability, and ease of storage and transport. Two-stroke snowthrowers have only two wheels (neither of which touch the ground during operation), and operators must provide continual support and attitudinal control by raising and tilting the equipment in order for it to perform.

Industry commenters noted that two-stroke snowthrowers use a 5.4 kg (12 pound) engine and a single belt-drive system, eliminating the weight of additional belts and pulleys. Moreover, almost all two-stroke snowthrowers are ''single-stage,'' according to industry comments, meaning that they use an auger to gather snow and expel it from a single chamber. By contrast, almost all four-stroke snowthrowers are two-stage units that use an auger to gather snow into one chamber and a separate impeller to discharge it from a second chamber, according to comments. The engines in four-stroke snowthrowers weigh between 11 kg (25 pounds) and 27 kg (60 pounds). According to information submitted by industry, the overall weights of two-stroke snowthrowers range from 16.3 kg (36 pounds) to 39.9 kg (88 pounds); the average weight of the two-stroke models listed was 29.5 kg (65 pounds). In EPA's opinion, a product line ranging in weight from 16.3 to 39.9 kg cannot fairly be considered light in weight, or specifically designed to be lifted or carried, and EPA is not inclined to raise the weight limit in the handheld definition to 30 kg to accommodate such equipment.

Environmental and state and local air officials' associations opposed handheld status for two-stroke snowthrowers. They expressed concern about the high levels of unburned air toxics emitted by two-stroke engines, given operator proximity. The associations pointed out that for larger snowthrowers, four-stroke models are available, and for the small two-wheeled version, electric models are available.

Since EPA agreed to undertake a phased approach to small engine regulation in March 1993 (see 59 FR 25399 at 25400–25401 for a detailed explanation), EPA has maintained that its Phase 1 program would be compatible with CARB's and incorporate compatible emission standards, where it is appropriate to do so in a nationally, rather than regionally, applicable regulation.

After considering the comments, the Agency has concluded that the HC standard will be optional for snowthrowers. This is because, as is discussed in the preamble to the proposed rule (see 59 FR at 25416) and by industry comments, snowthrowers are operated only in the winter, which means that they do not measurably impact ozone nonattainment concentrations and thus need not be subject to stringent control requirements aimed at controlling ozone nonattainment. On a national level, ozone nonattainment is primarily a seasonal problem that occurs during warm sunny weather. Regulating HC and emissions from products used exclusively in the winter, such as snowthrowers, will not advance the Agency's mission to correct this seasonal problem. EPA recognizes that California will be regulating HC emissions from snowthrowers, and today's decision should in no way prejudice California's efforts. The Agency notes that California faces a uniquely difficult problem in that its ozone nonattainment season is year round, and that Congress has recognized California's potential need to adopt measures that are more stringent than those that apply in the nation as a whole. EPA, instead, must promulgate regulations that apply nationally in scope and that address the air quality problems that face the nation generally.

Under today's rule, while manufacturers of snowthrowers will still be required to certify to and comply with applicable CO standards, they will be required to certify to the HC standard only where they opt to become subject to those standards. The Agency expects that many snowthrowers will in fact be certified to meet the HC standards, since the technology necessary to meet those standards will be readily available to snowthrower manufacturers and since manufacturers may wish to be able to take advantage of ''green marketing'' opportunities. However, the Agency does not believe it is appropriate at this time to absolutely require all snowthrowers to be certified to meet a standard that is meant to address ambient air quality problems that do not exist when when these products are in use. This decision in no way affects snowthrower manufacturer responsibilities with respect to the CO standards. Moreover, if an engine manufacturer produces an engine that is used in snowthrowers and in other products that are not used exclusively in the winter, that engine must be certified to the applicable HC standard. Finally, today's decision applies only with respect to regulating snowthrowers under this Phase I rule, and does not prejudge how the Agency will approach this issue in Phase 2.

The Agency is persuaded by comments describing the design, performance, and operational characteristics of two-stroke snowthrowers that two-stroke snowthrowers form a distinct product class from four-stroke snowthrowers. As two-stroke snowthrowers are a distinct product class that depends on a relatively lighter-weight product, EPA does not consider four-stroke technology to be generally available technology for the more light-weight two-stroke snowthrowers.

The Agency shares the concerns raised by commenters about operator proximity to high levels of unburned air toxics emitted by two-stroke engines in a regulatory manner. However, EPA lacks sufficient data to address those concerns at this time.

The Agency agrees with comments that two-stroke snowthrowers would meet the third prong of the handheld definition but for the weight criterion. Rather than amend the weight criterion in the handheld definition to include two-stroke snowthrowers, however, EPA is providing an exception to nonhandheld standards that will require

two-stroke snowthrowers to comply with handheld standards. The exception is based on the distinction between two- and four-stroke snowthrowers as product classes. This result is consistent with CARB.

3. Lawnmowers

Under EPA's proposal, all lawnmowers would be classified as nonhandheld equipment. The Agency requested comment on four options for providing relief for two-stroke lawnmower engine manufacturers.

Two industry manufacturer associations, a dealer association, and one manufacturer recommended that EPA allow two-stroke lawnmower engine manufacturers to meet handheld standards. They commented that two-stroke lawnmower engines would effectively be eliminated from the market under the proposal.

The manufacturer that commented would be particularly impacted by the requirement that lawnmower engines meet nonhandheld standards because it is the largest producer of two-stroke lawnmower engines. It argued that the definition of handheld and nonhandheld should not be used to discriminate against engines according to their application, to bypass the requirement of technological feasibility, to distort the competitive balance of the industry by banning major products, nor to place disproportionate burdens on one company as the price of maintaining an important product line.

A state commented that it sees no reason to grant special concessions to some manufacturers because their current product line uses a more polluting technology than their competitors; such a policy would penalize those manufacturers that have pursued cleaner technologies, according to this comment. Complying four-stroke engines are available and a sufficient number of manufacturers participate in the market to ensure competition, this comment stated.

Environmental and state and local air officials' associations expressed strong opposition to the options for relief for two-stroke lawnmowers; given that approximately 90 percent of lawnmowers sold in the United States already rely on four-stroke technology,[16] it can not be argued that four-stroke engines are not available technology for all lawnmowers, according to these groups.

Environmental and state and local air officials' associations commented that manufacturers have had ample opportunity to react to requirements that might reasonably have been expected. These manufacturers participated in the process that led to the December 1990 adoption of CARB's standards and have already enjoyed a four year period in which to take appropriate action. Those associations also commented that such regulatory relief would compromise the effectiveness of Phase 1, and thereby undermine their acceptance of the phased approach to regulation of small engines.

The Agency is promulgating its proposal that lawnmowers be classified as nonhandheld equipment. However, in response to the industry comments, EPA is providing an exception to the nonhandheld standard to allow two-stroke lawnmower engine manufacturers to produce a declining percentage of two-stroke lawnmower engines that meet handheld standards until model year 2003. This relief for two-stroke lawnmower engine manufacturers is justified by the economic hardship to current manufacturers of two-stroke lawnmowers that would result if two-stroke lawnmowers were required to meet nonhandheld standards upon the effective date of Phase 1, and by the need for additional lead time for current manufacturers of two-stroke lawnmowers to develop mowers that meet nonhandheld standards; EPA has concluded that handheld standards are the most stringent standards achievable for lawnmowers currently using two-stroke engines in the near term given these economic hardship and lead time considerations.

Economic hardship that would result if two-stroke lawnmowers were required to meet nonhandheld standards is documented in two sets of comments from an engine and equipment manufacturer. It stated that it would be forced to close a manufacturing plant that employs 230 people unless some form of relief from the requirement that all lawnmowers comply with nonhandheld standards is granted. The plant is devoted to two-stroke engine operations, according to the comments. The manufacturer commented that the declining production option would avoid closure of the plant and maintain a minimally necessary market presence for its two-stroke lawnmowers during Phase 1. The manufacturer stated that its principal goal and long-term strategy is to develop technology that will enable two-stroke lawnmower engines to meet Phase 2 nonhandheld standards. Reducing sales below 50 percent would destroy the market for the product before Phase 2 technology could be implemented, and reduce plant utilization to unacceptable levels, according to the manufacturer.

The need for additional lead time was a common theme among industry commenters, although only one two-stroke mower engine manufacturer addressed the difficulty, if not impossibility, of two-stroke mowers meeting nonhandheld standards by the effective date of Phase 1. According to this manufacturer, it is not technologically feasible for two-stroke engines to meet nonhandheld standards at this time. The manufacturer argued in its comments that more engineering effort is required for two-stroke lawnmower engines to meet handheld standards than for four-stroke engines to meet nonhandheld standards. It said that this is partly due to the difference in duty cycles for handheld and nonhandheld engines, with handheld engines having the advantage of a higher horsepower divisor than is obtained under the variable nonhandheld load specifications. The manufacturer stated that it is an engineering uncertainty whether and how valve-control techniques developed in the past, to enhance power output for smaller two-stroke engines used in products such as chain saws, might be used to reduce emissions in lawnmowers. Finally, the manufacturer claimed that while it is conceivable that its technology development could permit the introduction of engines meeting the Phase 1 nonhandheld standards during Phase 1, the prospect of this occurring before the year 2001 is remote.

CAA section 213(a)(3) specifies that nonroad emission standards must achieve the greatest degree of emission reduction achievable through the application of technology that the Administrator determines will be available, giving appropriate consideration to cost, lead time, noise, energy and safety. Taking into account the economic hardship and lead time considerations discussed above, EPA has determined that handheld standards subject to a declining production cap are the most stringent emission standards achievable for lawnmowers that currently use two-stroke engines.

Under the declining production cap, two-stroke lawnmower engine manufacturers that wish to continue producing two-stroke lawnmower engines must establish a production baseline. The production baseline is the highest number of two-stroke

[16] See Table 2–03, ''Inventory A & B National Population Estimates'' from the Nonroad Engine and Vehicle Emission Study (Report USEPA Office of Air and Radiation document #21A–2001, November 1991). The Nonroad Study is available in EPA Air Docket #A–91–24. It is also available through the National Technical Information Service, referenced as document PB 92–126960.

lawnmower engines produced in a single annual production period from 1992 through 1994. Documentation verifying the production baseline must be submitted to EPA with the application for certification. In model year 1997, two-stroke lawnmower engine manufacturers may produce 100 percent of their production baseline, which must be certified to handheld standards. In model year 1998, two-stroke lawnmower engine manufacturers may produce 75 percent of their production baseline. From model year 1999 until model year 2003, two-stroke lawnmower engine manufacturers may produce 50 percent of their production baseline in each annual production period. In model year 2003, two-stroke lawnmower engine manufacturers must meet either Phase 1 nonhandheld standards or Phase 2 nonhandheld standards, whichever are applicable.

Although EPA's approach is not consistent with CARB regulations, which require all lawnmowers to meet nonhandheld standards with no exceptions, EPA believes there are two valid reasons for the distinction. First, Congress has recognized the need for California to maintain its own mobile source emission control program (see section 209 of the CAA) because it faces difficult and distinct air pollution problems and, as a result, may need to adopt measures more stringent than those that apply in the nation as a whole. Second, EPA's nonroad emission standards are not allowed to be more stringent than is achievable after consideration of cost and lead time according to section 213(a)(3) of the CAA. Although California is constrained by similar criteria per the authorization criteria of section 209(e), consideration of such criteria is limited to the State of California. The Agency must consider cost and lead time when nonroad emission regulations affect the nation as a whole. The Agency has concluded that in order for it to meet the section 213(a)(3) requirements to consider cost and lead time in setting its nationally applicable standard, EPA must provide for this limited relief for manufacturers of lawnmowers that use two-stroke engines. This conclusion in no way prejudges whether California should grant similar relief.

In contrast to the its treatment of two-stroke versus four-stroke snowthrowers, EPA is not distinguishing two-stroke and four-stroke lawnmowers as separate products, but rather is recognizing the technological infeasibility of two-stroke engines used in lawnmowers meeting the nonhandheld standard by the effective date. The Agency agrees with commenters that four-stroke technology is generally available for lawnmowers, and that two-stroke engines are more polluting than four-stroke engines.

Still, although four-stroke technology is theoretically available for all lawnmowers, it is not immediately available for manufacturers of two-stroke lawnmower engines. Due to the cost and lead time concerns outlined above, EPA is providing a reasonable opportunity for two-stroke lawnmower engine manufacturers to come into compliance with nonhandheld standards.

4. Ice Augers

Under EPA's proposal, all earth and ice augers would have been subject to the applicable handheld or nonhandheld CO and HC standards. In the preamble to the proposed rule, in discussing snowthrowers, EPA noted that the exclusively wintertime use of snowthrowers argues against regulating emissions of HC from those products. In today's rule, EPA is in fact exempting snowthrowers from the requirement to certify to and comply with the HC standard, due to the fact that they do not demonstrably contribute to ozone nonattainment concentrations. For the same reasons, today's rule exempts ice augers from the requirement to certify to and comply with HC standards, while still requiring them to meet the applicable CO standard. Like snowthrowers, ice augers are clearly used only during the winter, and the Agency does not believe it would be reasonable to subject them to stringent control requirements aimed at addressing summertime ozone nonattainment problems. At their option, ice auger manufacturers will be able to certify to HC standards, if they find that complying technology is available and wish to take advantage of ''green marketing'' opportunities. This relief, however, is provided only for ice augers. Earth augers, since they are in fact used during the ozone nonattainment season, will be required to certify to applicable HC standards. Moreover, if a manufacturer produces an engine that is used in ice augers and other products that are not used exclusively in the winter, that engine must be certified to meet the applicable HC standard. Finally, today's decision applies only with respect to regulating ice augers under this Phase I rule, and does not prejudge how the Agency will approach this issue in Phase 2.

C. Requirements Applicable to Vehicle and Equipment Manufacturers

1. Requirement To Use Certified Engines

The Agency proposed that vehicle and equipment manufacturers using small nonroad engines must use appropriate handheld or nonhandheld certified engines, and prohibited the introduction into commerce of nonroad vehicles and equipment lacking appropriate certified engines after the effective date. The Agency received comments both supporting and questioning its authority to require the use of certified engines. One industry association commented that EPA has no authority to require the use of certified engines. A manufacturer and an industry association commented that EPA's authority under CAA section 213 does not extend to equipment. A state, an association of state and local air officials, and an environmental association supported the requirement that equipment manufacturers use complying engines.

Several industry associations commented that the prohibition on introducing into commerce vehicles and equipment lacking appropriate certified engines after the effective date could impose a substantial hardship on industry and is unnecessary to prevent stockpiling. According to their comments, equipment manufacturers now minimize the period they store engines to avoid the substantial costs associated with financing and warehousing inventoried engines. Two associations asked EPA to clarify that neither equipment manufacturers nor dealers have any special obligation to convert their inventories to use certified engines.

The Agency is finalizing the requirement that nonroad vehicle and equipment manufacturers use appropriate handheld or nonhandheld certified engines, effective with the 1997 model year. In EPA's view, the most effective way to ensure that certified engines are used in nonroad vehicles and equipment is to require such engines to be used. CAA sections 213, 216, and 301 provide authority for this requirement, since EPA is required to establish standards that apply to nonroad engines and the vehicles and equipment in which they are used.

2. Separate Effective Date

The Agency requested comment on a separate effective date for vehicle and equipment manufacturers, due to concern about inventories of noncertified engines that could not be incorporated into vehicles or equipment

by the effective date. Most comments did not support a separate effective date.

The Agency is not establishing a separate effective date for nonroad vehicle or equipment manufacturers. The Agency recognizes that certified engines are not likely to be available in the numbers needed by nonroad vehicle and equipment manufacturers on the effective date, and that these manufacturers will continue to use noncertified engines built prior to the effective date until noncertified engine inventories are used up and certified engines are available. As long as vehicle and equipment manufacturers do not inventory engines outside of normal business practices (that is, as long as they do not stockpile noncertified engines), they will be considered to be in compliance. The Agency is adding language to 40 CFR 90.1003(b)(4) to this effect. Neither vehicle and equipment manufacturers nor dealers have any obligation under this regulation to convert their inventories to products with certified engines.

D. CO Standard

An association of engine manufacturers requested an increase in the CO emission standard for Class I and II engines from the proposed level of 402 g/kW-hr to 469 g/kW-hr. In summary, it requested that the standard be raised so that industry can provide consumers, original equipment manufacturers, and commercial and industrial users with a more complete selection of engines (specifically mass market engines—the largest market for small engines) that can meet the Phase 1 HC + NO_X limits and perform acceptably under nearly all operating conditions.[17]

The Agency had to decide whether or not to grant this request based on its assessment of the technological feasibility of providing an adequate supply of Class I and II engines that could comply with the proposed 402 g/kW-hr CO level for the entire nation. Based on the information submitted, which is available in the docket for this rulemaking, the Agency has decided that 469 g/kW-hr is the lowest achievable CO standard for Classes I and II, given cost and lead time constraints, and has set the standard accordingly.

An association of equipment manufacturers argued that 402 g/kW-hr is too stringent for Class V engines and suggested that 603 g/kW-hr would be a more appropriate standard. The Agency requested and received further data and information to establish the appropriate limit for these engines. Additionally, an EPA-performed benefits analysis showed that the CO emission contribution in 2020 from Class V engines complying with a 603 g/kW-hr standard would decrease the benefits of this rule by only 0.7 percent when compared with the proposed standard of 402 g/kW-hr. The environmental impact of this change is low due to the small number of engines in this category.

Based on the technological feasibility information submitted and the small benefits impact, EPA has concluded that the proposed 402 g/kW-hr standard is not achievable for Phase 1 Class V engines. The Agency has therefore decided to raise the CO standard for Class V engines from the proposed 402 g/kW-hr to 603 g/kW-hr, which EPA believes is the most stringent standard achievable for Phase 1 Class V engines. Most, if not all, Class V engines are preempted from state regulation as farm and construction equipment. Therefore, compatibility with CARB is not of such importance for this engine class. However, this position on Class V CO standards is applicable only to Phase 1 and remains to be determined in upcoming Phase 2 regulations.

E. Labeling

The Agency received several comments on its proposed labeling requirements. After considering the comments, EPA has decided to provide equipment manufacturers with some additional flexibility requested by commenters regarding compatibility with CARB's labeling requirements. To reduce manufacturer burden and increase consistency with CARB's requirements, EPA will accept a label that has been approved by CARB and that contains language indicating federal standards have also been met. The Agency will accept any of the following: (1) A label for 50-state engine families having language compatible with both CARB and EPA requirements, (2) a CARB label with additional language to meet federal requirements for the 49-state label, and (3) the EPA label.

The Agency will retain the provision described in the NPRM that requires equipment and vehicle manufacturers to apply a supplemental label if the original engine label is obscured. This provision is consistent with CARB's approach, and ensures that owners, dealers, and repair personnel will have access to necessary engine information without disassembling the original vehicle or equipment.

In addition, EPA has dropped the unique engine identification number requirement. Based on information supplied by engine manufacturers and their associations, EPA has determined that the information to be gained by requiring the unique number did not justify the additional capital and administrative costs to the manufacturers. Because no useful life time period or in-use standard is being established, the Agency has decided to allow in-use testing and recall on a voluntary basis for Phase 1 and, as a result, there is no need for EPA to require the unique engine identification number.

V. Environmental Benefit Assessment

The Agency has determined that the standards set in this rule will reduce emissions of HC and CO and, despite attendant increased emissions of NO_X, will help most areas come into compliance with the National Ambient Air Quality Standards for ozone and, to a lesser extent, CO. Table 2 provides a summary of the annual nationwide emission impacts expected from this rule, beginning with the first full year of implementation.[18] Percentage reductions shown are as compared to the projected levels from small SI engines if this rule were not put into place. Note that annual emission reductions increase greatly in the first few years of the program and level off as fleet turnover is achieved; complete turnover is projected by the year 2020. The underlying analysis and complete table of emission reductions are provided in the Regulatory Support Document (RSD), a copy of which is in the public docket for this rulemaking.

[17] The association states that engine manufacturers have been working for several years to develop products that will meet the Phase 1 standards. Improvements in engine design have been made sufficient to comply with the HC+NO_X standard, but not meet the 402 g/kW-hr CO standard.

[18] These figures are based on the assumption that manufacturers of engines used in snowthrowers and ice augers will opt to certify such engines to meet the applicable HC standards. To the extent that this does not occur, estimated annual HC reductions, and estimated annual NO_X increases, would be reduced.

TABLE 2.—ENVIRONMENTAL IMPACT

Year	Annual HC reduction		Annual CO reduction		Annual NO_X increase	
	Tons	Percent	Tons	Percent	Tons	Percent
1997	102,800	13.1	244,600	2.7	11,000	67.5
2000	221,600	26.9	538,700	5.5	23,900	137.6
2003	262,700	30.5	651,400	6.3	27,800	150.7
2020	339,000	32.4	865,200	6.7	36,300	154.4

VI. Economic Effects

The total national average annual cost of this rule is estimated to be approximately $70 million. If catalysts become necessary, the average annual cost is estimated to be approximately $87 million. The net present value of pollution control capital costs is estimated by EPA to be approximately $28 million. Energy impacts are expected to be positive, freeing up approximately $8 million for other uses in the economy.

The following summary presents aggregate costs broken down by engines used in nonhandheld and those used in handheld equipment.[19] For greater detail of expected cost impacts, see the RSD.

A. Industry Cost Impacts

Industry will bear pollution control costs that are moderate: roughly 6 percent for handheld and 2 percent for nonhandheld equipment relative to current production costs. The level of pollution control costs is largely due to the high levels of pollution emitted by these engines, especially two-stroke engines, and the relatively outdated state of the technology compared to on-highway engines. However, the costs are still small in absolute terms, and it is anticipated that these costs will be passed through to consumers in higher product prices.

The Agency estimates that there will be no long run negative impacts on employment as a result of this rule, as costs can be recovered through increased prices. Any potential decreases in employment that might occur due to obsolescence of product line should be offset by increased production of engines meeting emission standards. Total demand for these products has traditionally been relatively inelastic and, thus, industry sales volume is not expected to decrease.

On average, the cost to the engine manufacturer to install the necessary emission control technology will be approximately $2 per engine used in nonhandheld equipment and $3.50 per engine used in handheld equipment. This includes variable hardware and production costs, assuming that catalytic converters will not be needed to comply with proposed standards. However, engine manufacturers may voluntarily decide to use catalysts on a percentage of engines at risk of only marginally complying. Should this occur, EPA estimates that the additional variable hardware costs will be about $4 per catalyst-equipped engine. Since catalysts are not expected to be used much, the overall sales-weighted average increase due to catalyst usage is estimated to be about $1 for engines used in nonhandheld equipment and marginal for engines used in handheld equipment. It should be noted that the costs between manufacturers will likely vary.

B. Consumer Cost Impacts

Consumers will find small increases in retail prices for most equipment powered by these engines. The initial purchase price to the consumer will, however, be partially or, in some cases, completely offset by savings in fuel and maintenance costs. Thus, over time, environmentally friendly equipment will become less costly to consumers.

The retail price of equipment that uses nonhandheld engines ranges from $90 to $9,000, and the retail price of equipment that uses handheld engines ranges from $60 to $1,000. The sales-weighted average increase in retail cost to the consumer due to the rule in 2003 is estimated to be about $5 for nonhandheld equipment and $7 for handheld equipment. If catalysts are necessary, the values in 2003 are about $7 for both nonhandheld and handheld equipment. The retail price effects for a specific engine will likely be more or less these values, depending on the technology of the engine; these are average, sales-weighted costs, not indicative of the price increase specific to any particular manufacturer's engine or equipment.

This rule is expected to decrease fuel consumption significantly. The average sales-weighted engine is expected to experience a 26 percent decrease in fuel consumption for nonhandheld equipment and a 13 percent decrease in fuel consumption for handheld equipment. These decreases are translated into small discounted lifetime sales-weighted fuel savings of approximately $3 for nonhandheld equipment and marginal for handheld equipment.

The Agency expects that the engines produced to meet the proposed emission standards will be of higher quality than current engines: the parts and raw materials will be more durable and less likely to malfunction, as discussed in the RSD. This will result in equipment that lasts longer and is operational a higher percentage of the time; however, EPA is unable to quantify the attendant decrease in consumer cost or increase in useful life at this time. The Agency requested comments on the potential decrease in maintenance costs and increase in useful life, but none were received that shed light on this topic.

Considering that the fuel savings offset the average increase in retail price per engine, the average sales-weighted lifetime increase in cost will be about $6.50 per handheld engine, while nonhandheld engines will realize a lifetime savings of about $2.50 per engine. This does not include the lifetime savings in maintenance costs, which should further benefit the consumer.

C. Cost-Effectiveness

Based upon the costs and benefits described above, EPA has prepared a cost-effectiveness analysis and has performed a Regulatory Impact Analysis (RIA) for this rule, which is contained in the RSD. Presented here is a summary of the cost-effectiveness of the small SI engine Phase 1 program, assuming catalysts are not used.

If all program costs are allocated to HC, this rule has a cost-effectiveness of $280 per ton of HC reduced.

[19] These estimate costs are based on the assumption that manufacturers of engines used in snowthrowers and ice augers will opt to certify such engines to meet the applicable HC standards. To the extent that this does not occur, estimated industry cost impacts and consumer cost impacts would be reduced, and cost-effectiveness of the program would not be significantly changed, if at all.

Alternatively, if all program costs are allocated to CO, the cost-effectiveness is $113 per ton of CO reduced. If the costs of the program are equally split between HC and CO, the cost-effectiveness is $140 per ton of HC reduced and $57 per ton of CO reduced. These cost-effectiveness numbers are significantly lower than costs per ton of other available control strategies. The cost-effectiveness estimates, underlying quantitative methodology, and comparisons to other available control strategies are explained further in the RSD.

In summary, the cost-effectiveness of the rule is favorable relative to the cost-effectiveness of several other control measures required under the Clean Air Act. To the extent that cost-effective nationwide controls are applied to small SI engines, the need to apply more expensive additional controls to other mobile and stationary sources of air pollution may be reduced in the future.

VII. Administrative Requirements

A. Administrative Designation and Regulatory Analysis

Under Executive Order 12866,[20] the Agency must determine whether the regulatory action is ''significant'' and therefore subject to OMB review and the requirements of the Executive Order. The order defines ''significant regulatory action'' as one that is likely to result in a rule that may:

(1) Have an annual effect on the economy of $100 million or more or adversely affect in a material way the economy, a sector of the economy, productivity, competition, jobs, the environment, public health or safety, or State, local, or tribal governments or communities;

(2) Create a serious inconsistency or otherwise interfere with an action taken or planned by another agency;

(3) Materially alter the budgetary impact of entitlement, grants, user fees, or loan programs or the rights and obligations of recipients thereof;

(4) Raise novel legal or policy issues arising out of legal mandates, the President's priorities, or the principles set forth in the Executive Order.

Pursuant to the terms of Executive Order 12866, it has been determined that this rule is a ''significant regulatory action'' because this rulemaking adversely affects in a material way a sector of the economy, namely manufacturers of small SI engines, particularly the manufacturers who specialize in the production of small handheld engines. Further, EPA believes that an RIA is important for this rule because small SI engines have not previously been regulated. As such, this action was submitted to OMB for review. Changes made in response to OMB suggestions or recommendations are documented in the public record.

[20] 58 FR 51735 (October 4, 1993).

B. Paperwork Reduction Act

The information collection requirements in this rule have been submitted for approval to the Office of Management and Budget (OMB) under the Paperwork Reduction Act, 44 U.S.C. 3501 et seq. Copies of the ICR document may be obtained from Sandy Farmer, Information Policy Branch, EPA, 401 M Street, SW (PM–223Y), Washington, DC 20460 or by calling (202) 260–2740.

Table 3 provides a listing of this rulemaking's information collection requirements along with the appropriate information collection request (ICR) numbers. The cost of this burden has been incorporated into the cost estimate for this rule.

The Agency has estimated that the public reporting burden for the collection of information required under this rule would average approximately 5,800 hours annually for a typical engine manufacturer.[21] The hours spent by a manufacturer on information collection activities in any given year would be highly dependent upon manufacturer specific variables, such as the number of engine families, production changes, emission defects, etc.

TABLE 3.—PUBLIC REPORTING BURDEN

EPA ICR No.	Type of information	OMB control no.
1695.02 .	Certification	2060–0338
0282.06 .	Emission Defect Information.	2060–0048
1673.01 .	Importation of Non-conforming Engines.	2060–0294
1674.01 .	Selective Enforcement Auditing.	2060–0295
0012.07 .	Engine Exclusion Determination.	2060–0124
0095.03 .	Pre-certification and Testing Exemption.	2060–0007
1675.01 .	In-use Testing (proposed; not finalized).	2060–0292

Send comments regarding the burden estimate or any other aspect of this collection of information, including suggestions for reducing this burden to Chief, Information Policy Branch, EPA, 401 M Street, SW. (PM–223Y), Washington, DC 20460; and to the Office of Information and Regulatory Affairs, Office of Management and Budget, Washington, DC 20503, marked ''Attention: Desk Officer for EPA.''

[21] This estimate is based on the assumption that manufacturers of engines used in snowthrowers and ice augers will opt to certify those engines to meet the applicable HC standards. To the extent that this does occur, the Agency does not estimate the average reporting burden will change.

C. Unfunded Mandates Act

Section 202 of the Unfunded Mandates Reform Act of 1995 (''Unfunded Mandates Act'') (signed into law on March 22, 1995) requires that the Agency prepare a budgetary impact statement before promulgating a rule that includes a Federal mandate that may result in expenditure by State, local, and tribal governments, in aggregate, or by the private sector, of $100 million or more in any one year. Section 203 requires the Agency to establish a plan for obtaining input from and informing, educating, and advising any small governments that may be significantly or uniquely affected by the rule.

Under section 205 of the Unfunded Mandates Act, the Agency must identify and consider a reasonable number of regulatory alternatives before promulgating a rule for which a budgetary impact statement must be prepared. The Agency must select from those alternatives the least costly, most cost-effective, or least burdensome alternative that achieves the objectives of the rule, unless the Agency explains why this alternative is not selected or the selection of this alternative is inconsistent with law.

Because this final rule is estimated to result in the expenditure by State, local, and tribal governments or the private sector of less than $100 million in any one year, the Agency has not prepared a budgetary impact statement or specifically addressed the selection of the least costly, most cost-effective or least burdensome alternative. Because small governments will not be significantly or uniquely affected by this rule, the Agency is not required to develop a plan with regard to small governments.

D. Regulatory Flexibility Act

The Regulatory Flexibility Act (5 U.S.C. 601, *et seq.*) requires EPA to consider potential impacts of proposed regulations on small business ''entities.'' If a preliminary analysis indicates that a proposed regulation would have a significant economic impact on 20 percent or more of small entities, then a regulatory flexibility analysis must be prepared.

The Agency has recently adopted a new approach to regulatory flexibility: for purposes of EPA's implementation of the Act, any impact is a significant impact, and any number of small entities is a substantial number.[22] Thus, EPA will consider regulatory options for every regulation subject to the Act that can reasonably be expected to have an impact on small entities. In light of this new approach, EPA has determined that this rule will have a significant effect on a substantial number of small entities. As a result, EPA tailored this rule to minimize the cost burdens imposed on smaller engine manufacturers. (See ''Small Entities'' in the Response to Comments for more discussion and comments.)

The regulations contain certification requirements for new engines, Selective Enforcement Auditing provisions for the testing of production engines, and prohibitions on incorrect engine use for equipment manufacturers. For example, the SEA program is structured such that manufacturers with lower annual production volumes have a decreased testing burden. Even though consideration was given to small entities in developing the requirements of this rule, it has recently come to EPA's attention that there may be a few businesses that are so small that even the reduced requirements could threaten their livelihood. In light of this, the Agency is currently considering exemptions or flexible requirements for small entities for all of its nonroad rules.

List of Subjects in 40 CFR Parts 9 and 90

Environmental protection, Administrative practice and procedure, Air pollution control, Confidential business information, Imports, Incorporation by reference, Labeling, Nonroad source pollution, Reporting and recordkeeping requirements.

Dated: May 30, 1995.

Carol M. Browner,

Administrator.

For the reasons set out in the preamble, title 40, chapter I of the Code of Federal Regulations is amended as follows:

PART 9—[AMENDED]

1. The authority citation for part 9 continues to read as follows:

Authority: 7 U.S.C. 135 *et seq.,* 136–136y; 15 U.S.C. 2001, 2003, 2005, 2006, 2601–2671; 21 U.S.C. 331j, 346a, 348; 31 U.S.C. 9701; 33 U.S.C. 1251 *et seq.,* 1311, 1313d, 1314, 1321, 1326, 1330, 1334, 1345(d) and (e), 1361; E.O. 11735, 38 FR 21243, 3 CFR, 1971–1975 Comp p. 973; 42 U.S.C. 241, 242b, 243, 246, 300f, 300g, 300g–1, 300g–2, 300g–3, 300g–4, 300g–5, 300g–6, 300j–1, 300j–2, 300j–3, 300j–4, 300j–9, 1857 *et seq.,* 6901–6992(k), 7401–7671(q), 7542, 9601–9657, 11023, 11048.

2. Section 9.1 is amended by adding new entries and a new heading to the table to read as follows:

§ 9.1 OMB approvals under the Paperwork Reduction Act.

* * * * *

40 CFR citation	OMB control No.
* * * * *	
Control of Emissions From New and In-use Nonroad Engines	
90.107–90.108	2060–0338
90.113	2060–0338
90.115–90.124	2060–0338
90.126	2060–0338
90.304–90.329	2060–0338
90.404–90.427	2060–0338
90.505–90.509	2060–0295
90.511–90.512	2060–0295
90.604	2060–0294
90.611–90.613	2060–0294
90.800	2060–0048
90.802–90.804	2060–0048
90.806	2060–0048
90.903	2060–0124
90.905–90.906	2060–0007

3. Part 90 is added to read as follows:

PART 90—CONTROL OF EMISSIONS FROM NONROAD SPARK–IGNITION ENGINES

Subpart A—General

Sec.

90.1 Applicability.
90.2 Effective dates.
90.3 Definitions.
90.4 Treatment of confidential information.
90.5 Acronyms and abbreviations.
90.6 Table and figure numbering; position.
90.7 Reference materials.

Subpart B—Emission Standards and Certification Provisions

90.101 Applicability.
90.102 Definitions.
90.103 Exhaust emission standards.
90.104 Compliance with emission standards.
90.105 Useful life period.
90.106 Certificate of conformity.
90.107 Application for certification.
90.108 Certification.
90.109 Requirement of certification—closed crankcase.
90.110 Requirement of certification—prohibited controls.
90.111 Requirement of certification—prohibition of defeat devices.
90.112 Requirement of certification—adjustable parameters.
90.113 In-use testing programs.
90.114 Requirement of certification—engine information label.
90.115 Requirement of certification—supplying production engines upon request.
90.116 Certification procedure—determining engine displacement, engine class, and engine families.
90.117 Certification procedure—test engine selection.
90.118 Certification procedure—service accumulation.
90.119 Certification procedure—testing.
90.120 Certification procedure—use of special test procedures.
90.121 Certification procedure—recordkeeping.
90.122 Amending the application and certificate of conformity.
90.123 Denial, revocation of certificate of conformity.
90.124 Request for hearing.
90.125 Hearing procedures.
90.126 Right of entry and access.

Subpart C—[Reserved]

Subpart D—Emission Test Equipment Provisions

90.301 Applicability.
90.302 Definitions.
90.303 Symbols, acronyms, abbreviations.
90.304 Test equipment overview.
90.305 Dynamometer specifications and calibration accuracy.
90.306 Dynamometer torque cell calibration.
90.307 Engine cooling system.
90.308 Lubricating oil and test fuels.
90.309 Engine intake air temperature measurement.
90.310 Engine intake air humidity measurement.
90.311 Test conditions.
90.312 Analytical gases.
90.313 Analyzers required.
90.314 Analyzer accuracy and specifications.
90.315 Analyzer initial calibration.
90.316 Hydrocarbon analyzer calibration.
90.317 Carbon monoxide analyzer calibration.
90.318 Oxides of nitrogen analyzer calibration.
90.319 NO_X converter check.
90.320 Carbon dioxide analyzer calibration.
90.321 NDIR analyzer calibration.
90.322 Calibration of other equipment.
90.323 Analyzer bench checks.
90.324 Analyzer leakage check.
90.325 Analyzer interference checks.
90.326 Pre-and post-test analyzer calibration.
90.327 Sampling system requirements.
90.328 Measurement equipment accuracy/calibration frequency table.
90.329 Catalyst thermal stress test.

Appendix A to Subpart D—Tables

Appendix B to Subpart D—Figures

Subpart E—Gaseous Exhaust Test Procedures

90.401 Applicability.
90.402 Definitions.
90.403 Symbols, acronyms, and abbreviations.

[22] Habicht, F. Henry II, Deputy Administrator, Internal EPA Memorandum, ''Revised Guidelines for Implementing the Regulatory Flexibility Act,'' April 9, 1992.

90.404 Test procedure overview.
90.405 Recorded information.
90.406 Engine parameters to be measured and recorded.
90.407 Engine inlet and exhaust systems.
90.408 Pre-test procedures.
90.409 Engine dynamometer test run.
90.410 Engine test cycle.
90.411 Post-test analyzer procedures.
90.412 Data logging.
90.413 Exhaust sample procedure—gaseous components.
90.414 Raw gaseous exhaust sampling and analytical system description.
90.415 Raw gaseous sampling procedures.
90.416 Intake air flow measurement specifications.
90.417 Fuel flow measurement specifications.
90.418 Data evaluation for gaseous emissions.
90.419 Raw emission sampling calculations—gasoline fueled engines.
90.420 CVS concept of exhaust gas sampling system.
90.421 Dilute gaseous exhaust sampling and analytical system description.
90.422 Background sample.
90.423 Exhaust gas analytical system; CVS grab sample.
90.424 Dilute sampling procedures—CVS calibration.
90.425 CVS calibration frequency.
90.426 Dilute emission sampling calculations—gasoline fueled engines.
90.427 Catalyst thermal stress resistance evaluation.

Appendix A to Subpart E—Tables

Appendix B to Subpart E—Figures

Subpart F—Selective Enforcement Auditing

90.501 Applicability.
90.502 Definitions.
90.503 Test orders.
90.504 Testing by the Administrator.
90.505 Maintenance of records; submittal of information.
90.506 Right of entry and access.
90.507 Sample selection.
90.508 Test procedures.
90.509 Calculation and reporting of test results.
90.510 Compliance with acceptable quality level and passing and failing criteria for selective enforcement audits.
90.511 Suspension and revocation of certificates of conformity.
90.512 Request for public hearing.
90.513 Administrative procedures for public hearing.
90.514 Hearing procedures.
90.515 Appeal of hearing decision.
90.516 Treatment of confidential information.

Appendix A to Subpart F—Sampling Plans for Selective Enforcement Auditing of Nonroad Engines

Subpart G—Importation of Nonconforming Engines

90.601 Applicability.
90.602 Definitions.
90.603 (Reserved)
90.604 General requirements.
90.605–90.610 (Reserved)
90.611 Importation for purposes other than resale.
90.612 Exemptions and exclusions.
90.613 Prohibited acts; penalties.
90.614 Treatment of confidential information.

Subpart H—[Reserved]

Subpart I—Emission-related Defect Reporting Requirements, Voluntary Emission Recall Program

90.801 Applicability.
90.802 Definitions.
90.803 Emission defect information report.
90.804 Voluntary emissions recall.
90.805 Reports, voluntary recall plan filing, record retention.
90.806 Responsibility under other legal provisions preserved.
90.807 Disclaimer of production warranty applicability.

Subpart J—Exclusion and Exemption of Nonroad Engines From Regulations

90.901 Applicability.
90.902 Definitions.
90.903 Exclusions, applications of section 216(10) of the Act.
90.904 Who may request an exemption.
90.905 Testing exemption.
90.906 Manufacturer-owned exemption and precertification exemption.
90.907 Display exemption.
90.908 National security exemption.
90.909 Export exemptions.
90.910 Granting of exemptions.
90.911 Submission of exemption requests.
90.912 Treatment of confidential information.

Subpart K—Prohibited Acts and General Enforcement Provisions

90.1001 Applicability.
90.1002 Definitions.
90.1003 Prohibited acts.
90.1004 General enforcement provisions.
90.1005 Injunction proceedings for prohibited acts.
90.1006 Penalties.

Subpart L—Emission Warranty and Maintenance Instructions

90.1101 Applicability.
90.1102 Definitions.
90.1103 Emission warranty, warranty period.
90.1104 Furnishing of maintenance instructions to ultimate purchaser.

Authority: Sections 203, 204, 205, 206, 207, 208, 209, 213, 215, 216, and 301(a) of the Clean Air Act, as amended (42 U.S.C. 7522, 7523, 7524, 7525, 7541, 7542, 7543, 7547, 7549, 7550, and 7601(a)).

Subpart A—General

§ 90.1 Applicability.

(a) This part applies to nonroad spark-ignition engines and vehicles that have a gross power output at or below 19 kilowatts (kW) and that are used for any purpose.

(b) Notwithstanding paragraph (a) of this section, the following nonroad engines and vehicles are not subject to the provisions of this part:

(1) Engines used to propel marine vessels as defined in the General Provisions of the United States Code, 1 U.S.C. 3 (1992);

(2) Engines that are both:

(i) Used in underground mining or in underground mining equipment; and

(ii) Regulated by the Mining Safety and Health Administration (MSHA) in 30 CFR parts 7, 31, 32, 36, 56, 57, 70, and 75;

(3) Engines used in motorcycles and regulated in 40 CFR part 86, subpart E;

(4) Engines used in aircraft as that term is defined in 40 CFR 87.1(a);

(5) Engines used in recreational vehicles and which are defined by the following criteria:

(i) The engine's rated speed is greater than or equal to 5,000 RPM;

(ii) The engine has no installed speed governor;

(iii) The engine is not used for the propulsion of a marine vessel; and

(iv) The engine does not meet the criteria to be categorized as a Class III, IV, or V engine, as indicated in § 90.103.

(c) Engines subject to the provisions of this subpart are also subject to the provisions of subparts B, D, E, F, G, I, J, K, and L of this part.

§ 90.2 Effective dates.

(a) This subpart applies to nonroad spark-ignition engines at or below 19 kW effective with the 1997 model year.

(b) Notwithstanding paragraph (a) of this section, this subpart applies to class V engines, as specified in § 90.116(b)(5), that are preempted from regulation in California by section 209(e)(1)(A) of the Act, effective January 1, 1998.

§ 90.3 Definitions.

The following definitions apply to part 90. All terms not defined herein have the meaning given them in the Act.

Act means the Clean Air Act, as amended, 42 U.S.C. 7401 et seq.

Adjustable parameter means any device, system, or element of design which is physically capable of being adjusted (including those which are difficult to access) and which, if adjusted, may affect emissions or engine performance during emission testing or normal in-use operation.

Administrator means the Administrator of the Environmental Protection Agency or his or her authorized representative.

Auxiliary emission control device (AECD) means any element of design that senses temperature, vehicle speed, engine RPM, transmission gear, or any

other parameter for the purpose of activating, modulating, delaying, or deactivating the operation of any part of the emission control system.

Certification means, with respect to new nonroad engines, obtaining a certificate of conformity for an engine family complying with the nonroad engine emission standards and requirements specified in this part.

Emission control system means any device, system, or element of design which controls or reduces the emission of substances from an engine.

Engine as used in this part, refers to nonroad engine.

Engine family means a group of engines, as specified in § 90.116.

Engine manufacturer means any person engaged in the manufacturing or assembling of new nonroad engines or the importing of such engines for resale, or who acts for and is under the control of any such person in connection with the distribution of such engines. Engine manufacturer does not include any dealer with respect to new nonroad engines received by such person in commerce.

EPA enforcement officer means any officer, employee, or authorized representative of the U.S. Environmental Protection Agency so designated in writing by the Administrator (or by his or her designee).

Exhaust emissions means matter emitted into the atmosphere from any opening downstream from the exhaust port of a nonroad engine.

Fuel system means all components involved in the transport, metering, and mixture of the fuel from the fuel tank to the combustion chamber(s) including the following: fuel tank, fuel tank cap, fuel pump, fuel lines, oil injection metering system, carburetor or fuel injection components, and all fuel system vents.

Gross power means the power measured at the crankshaft or its equivalent, the engine being equipped only with the standard accessories (such as oil pumps, coolant pumps, and so forth) necessary for its operation on the test bed.

Handheld equipment engine means a nonroad engine that meets the requirements specified in § 90.103(a)(2)(i) through (iv).

Model year (MY) means the manufacturer's annual new model production period which includes January 1 of the calendar year, ends no later than December 31 of the calendar year, and does not begin earlier than January 2 of the previous calendar year. Where a manufacturer has no annual new model production period, model year means calendar year.

New, for the purposes of this part, means a nonroad engine or nonroad vehicle the equitable or legal title to which has never been transferred to an ultimate purchaser. Where the equitable or legal title to the engine or vehicle is not transferred to an ultimate purchaser until after the engine or vehicle is placed into service, then the engine or vehicle will no longer be new after it is placed into service. A nonroad engine or vehicle is placed into service when it is used for its functional purposes. With respect to imported nonroad engines or nonroad vehicles, the term ''new'' means an engine or vehicle that is not covered by a certificate of conformity issued under this part at the time of importation, and that is manufactured after the effective date of a regulation issued under this part which is applicable to such engine or vehicle (or which would be applicable to such engine or vehicle had it been manufactured for importation into the United States).

Nonroad engine means:

(1) Except as discussed in paragraph (2) of this definition, any internal combustion engine:

(i) In or on a piece of equipment that is self-propelled or serves a dual purpose by both propelling itself and performing another function (such as garden tractors, off-highway mobile cranes, and bulldozers); or

(ii) In or on a piece of equipment that is intended to be propelled while performing its function (such as lawnmowers and string trimmers); or

(iii) That, by itself or in or on a piece of equipment, is portable or transportable, meaning designed to be and capable of being carried or moved from one location to another. Indicia of transportability include, but are not limited to, wheels, skids, carrying handles, dolly, trailer, or platform.

(2) An internal combustion engine is not a nonroad engine if:

(i) The engine is used to propel a motor vehicle or a vehicle used solely for competition, or is subject to standards promulgated under section 202 of the Act; or

(ii) The engine is regulated by a federal New Source Performance Standard promulgated under section 111 of the Act; or

(iii) The engine otherwise included in paragraph (1)(iii) of this definition remains or will remain at a location for more than 12 consecutive months or a shorter period of time for an engine located at a seasonal source. A location is any site at a building, structure, facility, or installation. Any engine (or engines) that replaces an engine at a location and that is intended to perform the same or similar function as the engine replaced will be included in calculating the consecutive time period. An engine located at a seasonal source is an engine that remains at a seasonal source during the full annual operating period of the seasonal source. A seasonal source is a stationary source that remains in a single location on a permanent basis (i.e., at least two years) and that operates at that single location approximately three months (or more) each year. This paragraph does not apply to an engine after the engine is removed from the location.

Nonroad vehicle means a vehicle that is powered by a nonroad engine as defined in this section and that is not a motor vehicle or a vehicle used solely for competition. Nonroad vehicle also includes equipment that is powered by nonroad engines.

Nonroad vehicle manufacturer means any person engaged in the manufacturing or assembling of new nonroad vehicles or importing such vehicles for resale, or who acts for and is under the control of any such person in connection with the distribution of such vehicles. A nonroad vehicle manufacturer does not include any dealer with respect to new nonroad vehicles received by such person in commerce.

Operating hours means:

(1) For engine storage areas or facilities, all times during which personnel other than custodial personnel are at work in the vicinity of the storage area or facility and have access to it.

(2) For all other areas or facilities, all times during which an assembly line is in operation or all times during which testing, maintenance, service accumulation, production or compilation of records, or any other procedure or activity related to certification testing, to translation of designs from the test stage to the production stage, or to engine manufacture or assembly is being carried out in a facility.

Presentation of credentials means the display of the document designating a person as an EPA enforcement officer or EPA authorized representative.

Scheduled maintenance means any adjustment, repair, removal, disassembly, cleaning, or replacement of components or systems required by the manufacturer to be performed on a periodic basis to prevent part failure or vehicle or engine malfunction, or those actions anticipated as necessary to correct an overt indication of malfunction or failure for which

periodic maintenance is not appropriate.

Test engine means the engine or group of engines that a manufacturer uses during certification to determine compliance with emission standards.

Ultimate purchaser means, with respect to any new nonroad engine or new nonroad vehicle, the first person who in good faith purchases such new nonroad engine or vehicle for purposes other than resale.

Used solely for competition means exhibiting features that are not easily removed and that would render its use other than in competition unsafe, impractical, or highly unlikely.

Warranty period means the period of time the engine or part is covered by the warranty provisions.

§ 90.4 Treatment of confidential information.

(a) Any manufacturer may assert that some or all of the information submitted pursuant to this part is entitled to confidential treatment as provided by part 2, subpart B of this chapter.

(b) Any claim of confidentiality must accompany the information at the time it is submitted to EPA.

(c) To assert that information submitted pursuant to this subpart is confidential, a manufacturer must indicate clearly the items of information claimed confidential by marking, circling, bracketing, stamping, or otherwise specifying the confidential information. Furthermore, EPA requests, but does not require, that the submitter also provide a second copy of its submittal from which all confidential information has been deleted. If a need arises to publicly release nonconfidential information, EPA will assume that the submitter has accurately deleted the confidential information from this second copy.

(d) If a claim is made that some or all of the information submitted pursuant to this subpart is entitled to confidential treatment, the information covered by that confidentiality claim will be disclosed by the Administrator only to the extent and by means of the procedures set forth in part 2, subpart B of this chapter.

(e) Information provided without a claim of confidentiality at the time of submission may be made available to the public by EPA without further notice to the submitter, in accordance with § 2.204(c)(2)(i)(A) of this chapter.

§ 90.5 Acronyms and abbreviations.

The following acronyms and abbreviations apply to part 90.

AECD—Auxiliary emission control device
ASME—American Society of Mechanical Engineers
ASTM—American Society for Testing and Materials
CAA—Clean Air Act
CAAA—Clean Air Act Amendments of 1990
CLD—chemiluminescent detector
CO—Carbon monoxide
CO_2—Carbon dioxide
EPA—Environmental Protection Agency
FTP—Federal Test Procedure
g/kW-hr—grams per kilowatt hour
HC—hydrocarbons
HCLD—heated chemiluminescent detector
HFID—heated flame ionization detector
ICI—independent Commercial Importer
NDIR—non-dispersive infrared analyzer
NIST—National Institute for Standards and Testing
NO—Nitric oxide
NO_2—Nitrogen dioxide
NO_X—Oxides of nitrogen
O_2—Oxygen
OEM—original equipment manufacturer
PMD—paramagnetic detector
SAE—Society of Automotive Engineers
SEA—Selective Enforcement Auditing
SI—spark-ignition
U.S.C.—United States Code
VOC—Volatile organic compounds
ZROD—zirconiumdioxide sensor

§ 90.6 Table and figure numbering; position.

(a) Tables for each subpart appear in an appendix at the end of the subpart. Tables are numbered consecutively by order of appearance in the appendix. The table title will indicate the topic.

(b) Figures for each subpart appear in an appendix at the end of the subpart. Figures are numbered consecutively by order of appearance in the appendix. The figure title will indicate the topic.

§ 90.7 Reference materials.

(a) *Incorporation by reference.* The documents in paragraph (b) of this section have been incorporated by reference. The incorporation by reference was approved by the Director of the Federal Register in accordance with 5 U.S.C. 552(a) and 1 CFR part 51. Copies may be inspected at U.S. EPA Air and Radiation Docket, room M–1500, 401 M Street, S.W., Washington D.C. 20460, or at the Office of the Federal Register, 800 North Capitol Street, NW., suite 700, Washington, DC.

(b) The following paragraphs and tables set forth the material that has been incorporated by reference in this part.

(1) *ASTM material.* The following table sets forth material from the American Society for Testing and Materials which has been incorporated by reference. The first column lists the number and name of the material. The second column lists the section(s) of this part, other than § 90.7, in which the matter is referenced. The second column is presented for information only and may not be all inclusive. Copies of these materials may be obtained from American Society for Testing and Materials, 1916 Race St., Philadelphia, PA 19103.

Document number and name	40 CFR part 90 reference
ASTM D86–93:	
Standard Test Method for Distillation of Petroleum Products	Appendix A to subpart D, Table 3.
ASTM D1319–89:	
Standard Test Method for Hydrocarbon Types in Liquid Petroleum Products by Fluorescent Indicator Adsorption.	Appendix A to subpart D, Table 3.
ASTM D2622–92:	
Standard Test Method for Sulfur in Petroleum Products by X-ray Spectrometry	Appendix A to subpart D, Table 3.
ASTM D2699–92:	
Standard Test Method for Knock Characteristics of Motor Fuels by the Research Method	Appendix A to subpart D, Table 3.
ASTM D2700–92:	
Standard Test Method for Knock Characteristics of Motor and Aviation Fuels by the Motor Method	Appendix A to subpart D, Table 3.
ASTM D3231–89:	
Standard Test Method for Phosphorus in Gasoline	Appendix A to subpart D, Table 3.
ASTM D3606–92:	
Standard Test Method for Determination of Benzene and Toluene in Finished Motor and Aviation Gasoline by Gas Chromatography.	Appendix A to subpart D, Table 3.
ASTM D5191–93a:	
Standard Test Method for Vapor Pressure of Petroleum Products (Mini Method)	Appendix A to subpart D, Table 3.

Document number and name	40 CFR part 90 reference
ASTM E29–93a: Standard Practice for Using Significant Digits in Test Data to Determine Conformance with Specifications.	90.116; 90.509.

(2) *SAE material.* The following table sets forth material from the Society of Automotive Engineers which has been incorporated by reference. The first column lists the number and name of the material. The second column lists the section(s) of this part, other than § 90.7, in which the matter is referenced. The second column is presented for information only and may not be all inclusive. Copies of these materials may be obtained from Society of Automotive Engineers International, 400 Commonwealth Dr., Warrendale, PA 15096–0001.

Document number and name	40 CFR part 90 reference
SAE J1930 September 1991, Electrical/Electronic Systems Diagnostic Terms, Definitions, Abbreviations and Acronyms	90.114
SAE Paper 770141, Optimization of a Flame Ionization Detector for Determination of Hydrocarbon in Diluted Automotive Exhausts, Glenn D. Reschke, 1977	90.316

Subpart B—Emission Standards and Certification Provisions

§ 90.101 Applicability.

The requirements of subpart B are applicable to all nonroad engines and vehicles subject to the provisions of subpart A of part 90.

§ 90.102 Definitions.

The definitions in subpart A of part 90 apply to this subpart. All terms not defined herein or in subpart A have the meaning given them in the Act. The following definitions also apply to this subpart.

Attitudinal control means the operator regulates either the horizontal or vertical position of the equipment, or both.

Carry means the operator completely bears the weight of the equipment, including the engine.

Support means that the operator holds the equipment in position so as to prevent it from falling, slipping or sinking. It is not necessary for the entire weight of the equipment to be borne by the operator.

§ 90.103 Exhaust emission standards.

(a) Exhaust emissions from new nonroad spark-ignition engines at or below 19 kilowatts (kW), effective with the 1997 model year, shall not exceed the following levels:

Exhaust Emission Standards (grams per kilowatt-hour)

Engine displacement class	Hydrocarbon plus oxides of nitrogen	Hydrocarbon	Carbon monoxide	Oxides of nitrogen
I	16.1	.....	469	.....
II	13.4	.....	469	.....
III	.....	295	805	5.36
IV	.....	241	805	5.36
V	.....	161	603	5.36

(1) Each engine displacement class has a unique set of exhaust emission standards. Boundaries for each class are indicated in § 90.116(b).

(2) Emission standards for classes III, IV, V may be used only if an engine meets at least one of the following requirements:

(i) The engine must be used in a piece of equipment that is carried by the operator throughout the performance of its intended function(s);

(ii) The engine must be used in a piece of equipment that must operate multipositionally, such as upside down or sideways, to complete its intended function(s);

(iii) The engine must be used in a piece of equipment for which the combined engine and equipment dry weight is under 14 kilograms, no more than two wheels are present on the equipment, and at least one of the following attributes is also present:

(A) The operator must alternately provide support or carry the equipment throughout the performance of its intended function(s);

(B) The operator must provide support or attitudinal control for the equipment throughout the performance of its intended function(s); and

(C) The engine must be used in a generator or pump;

(iv) The engine must be used to power one-person augers, with a combined engine and equipment dry weight under 20 kilograms.

(3) Notwithstanding paragraph (a)(2) of this section, two-stroke engines used to power lawnmowers may meet class III, IV, or V standards until model year 2003.

(4) Notwithstanding paragraph (a)(2) of this section, two-stroke engines used to power snowthrowers may meet class III, IV, or V standards.

(5) Notwithstanding paragraph (a)(2) of this section, engines used exclusively to power snowthrowers or ice augers, at the option of the engine manufacturer, need not certify to or comply with standards regulating emissions of hydrocarbons. If the manufacturer exercises the option to certify to standards regulating such emissions, such engines must meet such standards. If the engine produced by the manufacturer is to be used in any equipment or vehicle other than a snowthrower or ice auger, it must be certified to the applicable standard regulating emissions of hydrocarbons.

(b) Exhaust emissions will be measured using the procedures set forth in subpart E of this part.

§ 90.104 Compliance with emission standards.

(a) If all test engines representing an engine family have emissions less than or equal to each emission standard in a given engine displacement class, that family complies with that class of emission standards.

(b) If any test engine representing an engine family has emissions greater than any one emission standard in a given engine displacement class, that family will be deemed not in compliance with that class of emission standards.

(c) If catalysts are used in an engine family, the engine manufacturer must affirm that catalyst durability has been confirmed on the basis of the evaluation procedure that is specified in subpart E of this part.

§ 90.105 Useful life period.

A useful life period for engines subject to the provisions of subpart A of this part will be set by the Agency in the second phase of small engine regulation and will be promulgated no later than April 30, 1997.

§ 90.106 Certificate of conformity.

(a) Except as specified in § 90.2(b), every manufacturer of new engines produced during or after model year 1997 must obtain a certificate of conformity covering such engines; however, engines manufactured during an annual production period beginning prior to September 1, 1996 are not required to be certified.

(b)(1) The annual production period begins either when an engine family is first produced or on January 2 of the calendar year preceding the year for which the model year is designated, whichever date is later. The annual production period ends either when the last engine is produced or on December 31 of the calendar year for which the model year is named, whichever date is sooner.

(2) Notwithstanding paragraph (b)(1) of this section, annual production periods beginning prior to September 1, 1996 may not exceed 12 months in length.

(c) Except as provided in paragraph (d) of this section, a certificate of conformity is deemed to cover the engines named in such certificate and produced during the annual production period, as defined in paragraph (b) of this section.

(d) Except as provided in paragraph (e) of this section, the certificate of conformity must be obtained from the Administrator prior to selling, offering for sale, introducing into commerce, or importing into the United States the new engine. Engines produced prior to the effective date of a certificate of conformity may also be covered by the certificate, once it is effective, if the following conditions are met:

(1) The engines conform in all respects to the engines described in the application for the certificate of conformity.

(2) The engines are not sold, offered for sale, introduced into commerce, or delivered for introduction into commerce prior to the effective date of the certificate of conformity.

(3) EPA is notified prior to the beginning of production when such production will start, and EPA is provided a full opportunity to inspect and/or test the engines during and after their production. EPA must have the opportunity to conduct SEA production line testing as if the vehicles had been produced after the effective date of the certificate.

(e) Engines that are certified by EPA prior to January 2, 1996 for model year 1997 may be delivered for introduction into commerce prior to January 2, 1996 once a certificate of conformity has been issued.

(f) Engines imported by an original equipment manufacturer after December 31 of the calendar year for which the model year is named are still covered by the certificate of conformity as long as the production of the engine was completed before December 31 of that year.

§ 90.107 Application for certification.

(a) For each engine family, the engine manufacturer must submit to the Administrator a completed application for a certificate of conformity.

(b) The application must be approved and signed by the authorized representative of the manufacturer.

(c) The application must be updated and corrected by amendment as provided in § 90.122 to accurately reflect the manufacturer's production.

(d) *Required content.* Each application must include the following information:

(1) A description of the basic engine design including, but not limited to, the engine family specifications;

(2) An explanation of how the emission control system operates, including a detailed description of all emission control system components (Detailed component calibrations are not required to be included; they must be provided if requested, however.), each auxiliary emission control device (AECD), and all fuel system components to be installed on any production or test engine(s);

(3) Proposed test engine(s) selection and the rationale for the test engine(s) selection;

(4) Special or alternate test procedures, if applicable;

(5) A description of the operating cycle and the service accumulation period necessary to break-in the test engine(s) and stabilize emission levels and any maintenance scheduled;

(6) A description of all adjustable operating parameters including the following:

(i) The nominal or recommended setting and the associated production tolerances;

(ii) The intended physically adjustable range;

(iii) The limits or stops used to establish adjustable ranges;

(iv) Production tolerances of the limits or stops used to establish each physically adjustable range; and

(v) Information relating to why the physical limits or stops used to establish the physically adjustable range of each parameter, or any other means used to inhibit adjustment, are effective in preventing adjustment of parameters to settings outside the manufacturer's intended physically adjustable ranges on in-use engines;

(7) The proposed maintenance instructions the manufacturer will furnish to the ultimate purchaser of each new nonroad engine and the proposed engine information label;

(8) All test data obtained by the manufacturer on each test engine;

(9) A statement that the test engine(s), as described in the manufacturer's application for certification, has been tested in accordance with the applicable test procedures, utilizing the fuels and equipment required under subparts D and E of this part, and that on the basis of such tests the engine(s) conforms to the requirements of this part; and

(10) An unconditional statement certifying that all engines in the engine family comply with all requirements of this part and the Clean Air Act.

(e)(1) In addition to the information specified in paragraph (d) of this section, manufacturers of two-stroke lawnmower engines must submit with their application for a certificate of conformity:

(i) For model year 1997, information establishing the highest number of two-stroke lawnmower engines produced in a single annual production period from 1992 through 1994. This number will be known as the production baseline.

(ii) For model years 1998 through 2002, information documenting the previous year's production and

projected production for the current year.

(2) In model year 1997, two-stroke lawnmower engine manufacturers may produce up to 100 percent of their production baseline established under paragraph (e)(1)(i) of this section.

(3) In model year 1998, two-stroke lawnmower engine manufacturers may produce up to 75 percent of their production baseline.

(4) From model years 1999 through 2002, two-stroke lawnmower engine manufacturers may produce up to 50 percent of their production baseline.

(5) In model year 2003, two-stroke lawnmower engine manufacturers must meet class I or II standards specified in § 90.103(a). If in model year 2003 those standards have been superseded by Phase 2 standards, two-stroke lawnmower engine manufacturers must meet the Phase 2 standards that are equivalent to the class I or II standards.

(f) At the Administrator's request, the manufacturer must supply such additional information as may be required to evaluate the application including, but not limited to, projected nonroad engine production.

§ 90.108 Certification.

(a) If, after a review of the manufacturer's submitted application, information obtained from any inspection, and such other information as the Administrator may require, the Administrator determines that the application is complete and that the engine family meets the requirements of this part and the Clean Air Act, the Administrator shall issue a certificate of conformity.

(b) The Administrator shall give a written explanation when certification is denied. The manufacturer may request a hearing on a denial. (See § 90.124 for procedure.)

§ 90.109 Requirement of certification—closed crankcase.

(a) An engine's crankcase must be closed.

(b) For purposes of this section, ''crankcase'' means the housing for the crankshaft and other related internal parts.

§ 90.110 Requirement of certification—prohibited controls.

(a) An engine may not be equipped with an emission control device, system, or element of design for the purpose of complying with emission standards if such device, system, or element of design will cause or contribute to an unreasonable risk to public health, welfare, or safety in its operation or function.

(b) An engine with an emission control device, system, or element of design may not emit any noxious or toxic substance which would not be emitted in the operation of such engine in the absence of the device, system, or element of design except as specifically permitted by regulation.

§ 90.111 Requirement of certification—prohibition of defeat devices.

(a) An engine may not be equipped with a defeat device.

(b) For purposes of this section, ''defeat device'' means any device, system, or element of design which senses operation outside normal emission test conditions and reduces emission control effectiveness.

(1) Defeat device includes any auxiliary emission control device (AECD) that reduces the effectiveness of the emission control system under conditions which may reasonably be expected to be encountered in normal operation and use unless such conditions are included in the test procedure.

(2) Defeat device does not include such items which either operate only during engine starting or are necessary to protect the engine (or vehicle in which it is installed) against damage or accident during its operation.

§ 90.112 Requirement of certification—adjustable parameters.

(a) Engines equipped with adjustable parameters must comply with all requirements of this subpart for any specification within the physically available range.

(b) An operating parameter is not considered adjustable if it is permanently sealed by the manufacturer or otherwise not normally accessible using ordinary tools.

(c) The Administrator may require that adjustable parameters be set to any specification within the adjustable range during certification or a selective enforcement audit to determine compliance with the requirements of this subpart.

§ 90.113 In-use testing program.

(a) At the time of certification the engine manufacturer may propose which engine families should be included in an in-use test program. EPA will approve a manufacturer's test program if the selected engine families represent an adequate consideration of the elements listed in paragraphs (b) and (c) of this section.

(b) *Number of engines to be tested.* The number of engines to be tested by a manufacturer is determined by the following method:

(1) For an engine manufacturer with total projected annual production of more than 75,000 engines destined for the United States market for that model year, the minimum number of engines to be tested may be the lowest of the numbers determined in paragraph (b)(1)(i), (ii) or (iii) of this section:

(i) Divide the manufacturer's total projected annual production of small SI engines destined for the United States market for that model year by 50,000, and round to the nearest whole number;

(ii) Test five engines each from 25 percent of all engine families certified in that model year; and

(iii) Test three engines each from 50 percent of all engine families certified in that model year.

(2) An engine manufacturer with total projected annual production of 75,000 engines or less destined for the United States market for that model year may test a minimum of two engines.

(c) *Criteria for selecting test engines.* An engine manufacturer may select test engines from engine families utilizing the following criteria and in the order specified:

(1) Engine families using emission control technology which most likely will be used on Phase 2 engines;

(2) Engine families using aftertreatment;

(3) Engine families certified to different emission standards;

(4) Different engine designs (such as sidevalve head versus overhead valve engines);

(5) Engine families using emission control technology specifically installed to achieve compliance with emission standards of this part;

(6) The engine family with the highest projected annual sales; and

(7) Engine families which meet the above criteria, but have not been included in prior model year in-use testing programs as required by these provisions.

(d) *Collection of in-use engines.* An engine manufacturer may procure in-use engines which have been operated for between half and three-quarters of the engine's advertised (or projected) useful life. All testing may be completed within three years from the date the certificate is first issued for an engine family undergoing in-use testing.

(1) Test engines may be procured from sources not associated with the engine manufacturer or vehicle manufacturer, except that with prior approval of the Administrator, an engine manufacturer with annual sales of less than 50,000 engines may obtain in-use engines associated with itself or its vehicle manufacturer.

(2) A test engine should have a maintenance history representative of actual in-use conditions.

(i) A manufacturer may question the end user regarding the accumulated usage, maintenance, operating conditions, and storage of the test engines.

(ii) Documents used in the procurement process may be maintained as required in § 90.121.

(3) *Maintenance and testing of test engines.*

(i) The manufacturer may perform minimal set-to-spec maintenance on a test engine. Maintenance may include only that which is listed in the owner's instructions for engines with the amount of service and age of the acquired test engine.

(ii) Documentation of all maintenance and adjustments may be maintained and retained as required by § 90.121.

(4) One valid emission test may be conducted for each in-use engine.

(5) If a selected in-use engine fails to comply with any applicable certification emission standard, the manufacturer may determine the reason for noncompliance. The manufacturer may report all determinations for noncompliance in its annual in-use test result report as described below.

(e) *In-use test program reporting.* The manufacturer may submit to the Administrator by January 30 of each calendar year all emission testing results generated from in-use testing. The following information may be reported for each test engine:

(1) Engine family;

(2) Model;

(3) Engine serial number;

(4) Date of manufacture;

(5) Estimated hours of use;

(6) Results of all emission testing;

(7) Summary of all maintenance and/or adjustments performed;

(8) Summary of all modifications and/or repairs; and

(9) Determinations of compliance and/or noncompliance.

(f) The Administrator may approve and/or suggest modifications to a manufacturer's in-use testing program.

§ 90.114 Requirement of certification—engine information label.

(a) The engine manufacturer must affix at the time of manufacture a permanent and legible label identifying each nonroad engine. The label must meet the following requirements:

(1) Be attached in such a manner that it cannot be removed without destroying or defacing the label;

(2) Be durable and readable for the entire engine life;

(3) Be secured to an engine part necessary for normal engine operation and not normally requiring replacement during engine life;

(4) Be written in English; and

(5) Be located so as to be readily visible to the average person after the engine is installed in the vehicle.

(b) If the nonroad vehicle obscures the label on the engine, the nonroad vehicle manufacturer must attach a supplemental label so that this label is readily visible to the average person. The supplemental label must:

(1) Be attached in such a manner that it cannot be removed without destroying or defacing the label;

(2) Be secured to a vehicle part necessary for normal operation and not normally requiring replacement during the vehicle life; and

(3) Be identical in content to the label which was obscured.

(c) The label must contain the following information:

(1) The heading ''Important Engine Information;''

(2) The full corporate name and trademark of the engine manufacturer;

(3) The statement, ''This (specify vehicle or engine, as applicable) is certified to operate on (specify operating fuel(s));''

(4) Identification of the Exhaust Emission Control System (Abbreviations may be used and must conform to the nomenclature and abbreviations provided in the Society of Automotive Engineers procedure J1930, ''Electrical/Electronic Systems Diagnostic Terms, Definitions, Abbreviations and Acronyms,'' September 1991. This procedure has been incorporated by reference. See § 90.7.);

(5) All engine lubricant requirements;

(6) Date of engine manufacture [day (optional), month and year];

(7) The statement ''This engine conforms to [model year] U.S. EPA regulations for small nonroad engines.'';

(8) EPA standardized engine family designation;

(9) Engine displacement [in cubic centimeters]; and

(10) Other information concerning proper maintenance and use or indicating compliance or noncompliance with other standards may be indicated on the label.

(d) If there is insufficient space on the engine (or on the vehicle where a supplemental label is required under paragraph (b) of this section) to accommodate a label including all the information required in paragraph (c) of this section, the manufacturer may delete or alter the label as indicated in this paragraph. The information deleted from the label must appear in the owner's manual.

(1) Exclude the information required in paragraphs (c)(3), (4), and (5) of this section. The fuel or lubricant may be specified elsewhere on the engine.

(2) Exclude the information required by paragraph (c)(6) of this section, if the date the engine was manufactured is stamped on the engine.

(e) The Administrator may, upon request, waive or modify the label content requirements of paragraphs (c) and (d) of this section, provided that the intent of such requirements is met.

§ 90.115 Requirement of certification—supplying production engines upon request.

Upon the Administrator's request, the manufacturer must supply a reasonable number of production engines for testing and evaluation. These engines must be representative of typical production and supplied for testing at such time and place and for such reasonable periods as the Administrator may require.

§ 90.116 Certification procedure—determining engine displacement, engine class, and engine families.

(a) Engine displacement must be calculated using nominal engine values and rounded to the nearest whole cubic centimeter in accordance with ASTM E29–93a. This procedure has been incorporated by reference. See § 90.7.

(b) Engines will be divided into classes by the following:

(1) Class I—engines less than 225 cc in displacement,

(2) Class II—engines greater than or equal to 225 cc in displacement,

(3) Class III—handheld equipment engines less than 20 cc in displacement,

(4) Class IV—handheld equipment engines equal or greater than 20 cc but less than 50 cc in displacement, and

(5) Class V—handheld equipment engines equal to or greater than 50 cc in displacement.

(c) The manufacturer's product line will be divided into groupings of engine families as specified by paragraph (d) of this section.

(d) To be classed in the same engine family, engines must be identical in all of the following applicable respects:

(1) The combustion cycle;

(2) The cooling mechanism;

(3) The cylinder configuration (inline, vee, opposed, bore spacings, and so forth);

(4) The number of cylinders;

(5) The engine class;

(6) The number of catalytic converters, location, volume, and composition; and

(7) The thermal reactor characteristics.

(e) At the manufacturer's option, engines identical in all the respects

listed in paragraph (d) of this section may be further divided into different engine families if the Administrator determines that they may be expected to have different emission characteristics. This determination is based upon the consideration of features such as:

(1) The bore and stroke;

(2) The combustion chamber configuration;

(3) The intake and exhaust timing method of actuation (poppet valve, reed valve, rotary valve, and so forth);

(4) The intake and exhaust valve or port sizes, as applicable;

(5) The fuel system;

(6) The exhaust system; and

(7) The method of air aspiration.

(f) Where engines are of a type which cannot be divided into engine families based upon the criteria listed in paragraph (d) of this section, the Administrator will establish families for those engines based upon the features most related to their emission characteristics.

§ 90.117 Certification procedure—test engine selection.

(a) The manufacturer must select, from each engine family, a test engine that the manufacturer determines to be most likely to exceed the emission standard.

(b) The test engine must be constructed to be representative of production engines.

§ 90.118 Certification procedure—service accumulation.

(a)(1) The test engine must be operated with all emission control systems operating properly for a period sufficient to stabilize emissions.

(2) The period sufficient to stabilize emissions may not exceed 12 hours.

(b) No maintenance, other than recommended lubrication and filter changes, may be performed during service accumulation without the Administrator's approval.

(c) Service accumulation is to be performed in a manner using good engineering judgment to ensure that emissions are representative of production engines.

(d) The manufacturer must maintain, and provide to the Administrator, records stating the rationale for selecting a service accumulation period less than 12 hours and records describing the method used to accumulate hours on the test engine(s).

§ 90.119 Certification procedure—testing.

(a) *Manufacturer testing.* The manufacturer must test the test engine using the specified test procedures and appropriate test cycle. All test results must be reported to the Administrator.

(1) The test procedure to be used is detailed in Subpart E of this part.

(i) Class I and II engines must use Test Cycle A described in Subpart E of this part, except that Class I and II engine families in which 100 percent of the engines sold operate only at rated speed may use Test Cycle B described in subpart E of this part.

(ii) Class III, IV, and V engines must use Test Cycle C described in subpart E of this part.

(2) Emission test equipment provisions are described in subpart D of this part.

(b) *Administrator testing.* (1) The Administrator may require that any one or more of the test engines be submitted to the Administrator, at such place or places as the Administrator may designate, for the purposes of conducting emission tests. The Administrator may specify that testing will be conducted at the manufacturer's facility, in which case instrumentation and equipment specified by the Administrator must be made available by the manufacturer for test operations. Any testing conducted at a manufacturer's facility must be scheduled by the manufacturer as promptly as possible.

(2)(i) Whenever the Administrator conducts a test on a test engine, the results of that test will, unless subsequently invalidated by the Administrator, comprise the official data for the engine and the manufacturer's data will not be used in determining compliance with emission standards.

(ii) Prior to the performance of such test, the Administrator may adjust or cause to be adjusted any adjustable parameter of the test engine which the Administrator has determined to be subject to adjustment for certification testing, to any setting within the physically adjustable range of that parameter, to determine whether such engine conforms to applicable emission standards.

(iii) For those engine parameters which the Administrator has not determined to be subject to adjustment for certification testing, the test engine presented to the Administrator for testing will be calibrated within the production tolerances applicable to the manufacturer specification shown on the engine label or in the owner's manual, as specified in the application for certification.

(c) *Use of carryover test data.* In lieu of testing, the manufacturer may submit, with the Administrator's approval, emission test data used to certify substantially similar engine families in previous years. This ''carryover'' test data is only allowable if the data shows the test engine would fully comply with the emission standards for the applicable class.

(d) *Scheduled maintenance during testing.* No scheduled maintenance may be performed during testing of the engine.

(e) *Unscheduled maintenance on test engines.*

(1) Manufacturers may not perform any unscheduled engine, emission control system, or fuel system adjustment, repair, removal, disassembly, cleaning, or replacement on a test engine without the advance approval of the Administrator.

(2) The Administrator may approve unscheduled maintenance if:

(i) A preliminary determination has been made that a part failure or system malfunction, or the repair of such failure or malfunction, does not render the engine unrepresentative of engines in use, and does not require direct access to the combustion chamber; and

(ii) A determination has been made that the need for maintenance or repairs is indicated by an overt malfunction such as persistent misfire, engine stall, overheating, fluid leakage, or loss of oil pressure.

(3) Emission measurements may not be used as a means of determining the need for unscheduled maintenance under paragraph (e)(2) of this section.

(4) The Administrator must have the opportunity to verify the extent of any overt indication of part failure (for example, misfire, stall), or an activation of an audible and/or visual signal, prior to the manufacturer performing any maintenance related to such overt indication or signal.

(5) Unless approved by the Administrator prior to use, engine manufacturers may not use any equipment, instruments, or tools to identify malfunctioning, maladjusted, or defective engine components unless the same or equivalent equipment, instruments, or tools are available at dealerships and other service outlets and are used in conjunction with scheduled maintenance on such components.

(6) If the Administrator determines that part failure or system malfunction occurrence and/or repair rendered the engine unrepresentative of production engines, the engine cannot be used as a test engine.

(7) Unless waived by the Administrator, complete emission tests are required before and after any engine maintenance which may reasonably be expected to affect emissions.

(f) *Engine failure.* A manufacturer may not use as a test engine any engine

which incurs major mechanical failure necessitating disassembly of the engine. This prohibition does not apply to failures which occur after completion of the service accumulation period.

§ 90.120 Certification procedure—use of special test procedures.

(a) *Use of special test procedures by EPA.* The Administrator may establish special test procedures for any engine that the Administrator determines is not susceptible to satisfactory testing under the specified test procedures set forth in subpart E of this part.

(b)(1) *Use of alternate test procedures by an engine manufacturer.* A manufacturer may elect to use an alternate test procedure provided that it yields results equal to the results from the specified test procedure in subpart E, its use is approved in advance by the Administrator, and the basis for equivalent results with the specified test procedure is fully described in the manufacturer's application.

(2) An engine manufacturer electing to use alternate test procedures is solely responsible for the results obtained. The Administrator may reject data generated under test procedures which do not correlate with data generated under the specified procedures.

§ 90.121 Certification procedure—recordkeeping.

(a) The engine manufacturer must maintain the following adequately organized records:

(1) Copies of all applications filed with the Administrator;

(2) A copy of all data obtained through the in-use testing program; and

(3) A detailed history of each test engine used for certification including the following:

(i) A description of the test engine's construction, including a general description of the origin and buildup of the engine, steps taken to insure that it is representative of production engines, description of components specially built for the test engine, and the origin and description of all emission-related components;

(ii) A description of the method used for engine service accumulation, including date(s) and the number of hours accumulated;

(iii) A description of all maintenance, including modifications, parts changes, and other servicing performed, and the date(s), and reason(s) for such maintenance;

(iv) A description of all emission tests performed including routine and standard test documentation, as specified in subpart E of this part, date(s), and the purpose of each test;

(v) A description of all tests performed to diagnose engine or emission control performance, giving the date and time of each and the reason(s) for the test; and

(vi) A description of any significant event(s) affecting the engine during the period covered by the history of the test engine but not described by an entry under one of the previous paragraphs of this section.

(b) Routine emission test data, such as those reporting test cell temperature and relative humidity at start and finish of test and raw emission results from each mode or test phase, must be retained for a period of one year after issuance of all certificates of conformity to which they relate. All other information specified in paragraph (a) of this section must be retained for a period of eight years after issuance of all certificates of conformity to which they relate.

(c) Records may be kept in any format and on any media, provided that, at the Administrator's request, organized, written records in English are promptly supplied by the manufacturer.

(d) The manufacturer must supply, at the Administrator's request, copies of any engine maintenance instructions or explanations issued by the manufacturer.

§ 90.122 Amending the application and certificate of conformity.

(a) The engine manufacturer must notify the Administrator when either an engine is to be added to a certificate of conformity or changes are to be made to a product line covered by a certificate of conformity. Notification occurs when the manufacturer submits an amendment to the original application prior to either producing such engines or making such changes to a product line.

(b) The amendment must request that the engine manufacturer's existing certificate of conformity be amended and include the following information:

(1) A full description of the engine to be added or the change(s) to be made in production;

(2) The manufacturer's proposed test engine selection(s); and

(3) Engineering evaluations or reasons why the original test engine is or is not still appropriate.

(c) The Administrator may require the engine manufacturer to perform tests on an engine representing the engine to be added or changed.

(d) *Decision by Administrator.* (1) Based on the submitted amendment and data derived from such testing as the Administrator may require or conduct, the Administrator must determine whether the proposed addition or change would still be covered by the certificate of conformity then in effect.

(2) If the Administrator determines that the new or changed engine(s) meets the requirements of this subpart and the Act, the appropriate certificate of conformity will be amended.

(3) If the Administrator determines that the proposed amendment would not be covered by the certificate of conformity, the Administrator must provide a written explanation to the engine manufacturer of his or her decision not to amend the certificate. The manufacturer may request a hearing on a denial.

(e)(1) Alternatively, an engine manufacturer may make changes in or additions to production engines concurrently with amending the application as set forth in paragraph (b) of this section, if the manufacturer determines that all affected engines will still meet applicable emission standards. The engine manufacturer must supply supporting documentation, test data, and engineering evaluations as appropriate to support its determination.

(2) If, after a review, the Administrator determines additional testing is required, the engine manufacturer must provide required test data within 30 days or cease production of the affected engines.

(3) If the Administrator determines that the affected engines do not meet applicable requirements, the Administrator will notify the engine manufacturer to cease production of the affected engines.

§ 90.123 Denial, revocation of certificate of conformity.

(a) If, after review of the engine manufacturer's application, request for certification, information obtained from any inspection, and any other information the Administrator may require, the Administrator determines that the test engine does not meet applicable standards and requirements, the Administrator will notify the manufacturer in writing, setting forth the basis for this determination.

(b) Notwithstanding the fact that engines described in the application may comply with all other requirements of this subpart, the Administrator may deny the issuance of or revoke a previously issued certificate of conformity if the Administrator finds any one of the following infractions to be substantial:

(1) The engine manufacturer submits false or incomplete information;

(2) The engine manufacturer denies an EPA enforcement officer or EPA authorized representative the

opportunity to conduct authorized inspections;

(3) The engine manufacturer fails to supply requested information or amend its application to include all engines being produced;

(4) The engine manufacturer renders inaccurate any test data which it submits or otherwise circumvents the intent of the Act or this part; or

(5) The engine manufacturer denies an EPA enforcement officer or EPA authorized representative reasonable assistance (as defined in § 90.506).

(c) If a manufacturer knowingly commits an infraction specified in paragraph (b)(1) or (b)(4) of this section or knowingly commits any fraudulent act which results in the issuance of a certificate of conformity, the Administrator may deem such certificate void ab initio.

(d) When the Administrator denies or revokes a certificate of conformity, the engine manufacturer will be provided a written determination. The manufacturer may request a hearing on the Administrator's decision.

(e) Any revocation of a certificate of conformity extends no further than to forbid the introduction into commerce of those engines previously covered by the certification which are still in the possession of the engine manufacturer, except in cases of such fraud or other misconduct that makes the certification void ab initio.

§ 90.124 Request for hearing.

(a) An engine manufacturer may request a hearing on the Administrator's denial or revocation of a certificate of conformity.

(b) The engine manufacturer's request must be filed within 30 days of the Administrator's decision, be in writing, and set forth the manufacturer's objections to the Administrator's decision and data to support the objections.

(c) If, after review of the request and supporting data, the Administrator finds that the request raises a substantial and factual issue, the Administrator will provide the engine manufacturer a hearing.

§ 90.125 Hearing procedures.

The hearing procedures set forth in §§ 90.513, 90.514, and 90.515 apply to this subpart.

§ 90.126 Right of entry and access.

Any engine manufacturer that has applied for certification of a new engine or engine family subject to certification testing under this subpart must admit or cause to be admitted to any applicable facilities during operating hours any EPA enforcement officer or EPA authorized representative as provided in § 90.506.

Subpart C—[Reserved]

Subpart D—Emission Test Equipment Provisions

§ 90.301 Applicability.

(a) This subpart describes the equipment required in order to perform exhaust emission tests on new nonroad spark-ignition engines and vehicles subject to the provisions of subpart A of part 90.

(b) Exhaust gases, either raw or dilute, are sampled while the test engine is operated using a steady state test cycle on an engine dynamometer. The exhaust gases receive specific component analysis determining concentration of pollutant. Emission concentrations are converted to mass emission rates in grams per hour based on either fuel flow, fuel flow and engine intake air flow, or exhaust volume flow. Weighted emission rates are reported as grams per brake-kilowatt hour (g/kW-hr). See subpart E of this part for a complete description of the test procedure.

(c) Additional information about system design, calibration methodologies, and so forth, for raw gas sampling can be found in part 86, subpart D of this chapter. Examples for system design, calibration methodologies, and so forth, for dilute exhaust gas sampling can be found in part 86, subpart N of this chapter.

§ 90.302 Definitions.

The definitions in § 90.3 apply to this subpart. The following definitions also apply to this subpart.

Rated speed means the speed at which the manufacturer specifies the maximum rated power of an engine.

Intermediate speed means the engine speed which is 85 percent of the rated speed.

§ 90.303 Symbols, acronyms, abbreviations.

(a) The acronyms and abbreviations in § 90.5 apply to this subpart.

(b) The symbols in Table 1 in Appendix A of this subpart apply to this subpart.

§ 90.304 Test equipment overview.

(a) All engines subject to this subpart are tested for exhaust emissions. Engines are operated on dynamometers meeting the specification given in § 90.305.

(b) The exhaust is tested for gaseous emissions using a raw gas sampling system as described in § 90.414 or a constant volume sampling (CVS) system as described in § 90.421. Both systems require analyzers (see paragraph (c) of this section) specific to the pollutant being measured.

(c) Analyzers used are a non-dispersive infrared (NDIR) absorption type for carbon monoxide and carbon dioxide analysis; paramagnetic (PMD), zirconia (ZRDO), or electrochemical type (ECS) for oxygen analysis; a flame ionization (FID) or heated flame ionization (HFID) type for hydrocarbon analysis; and a chemiluminescent detector (CLD) or heated chemiluminescent detector (HCLD) for oxides of nitrogen analysis.

§ 90.305 Dynamometer specifications and calibration accuracy.

(a) *Dynamometer specifications.* The dynamometer test stand and other instruments for measurement of speed and power output must meet the engine speed and torque accuracy requirements shown in Table 2 in Appendix A of this subpart. The dynamometer must be capable of performing the test cycle described in § 90.410.

(b) *Dynamometer calibration accuracy.* (1) The dynamometer test stand and other instruments for measurement of power output must meet the calibration frequency shown in Table 2 in Appendix A of this subpart.

(2) A minimum of three calibration weights for each range used is required. The weights must be equally spaced and traceable to within 0.5 percent of National Institute for Standards and Testing (NIST) weights. Laboratories located in foreign countries may certify calibration weights to local government bureau standards.

§ 90.306 Dynamometer torque cell calibration.

(a)(1) Any lever arm used to convert a weight or a force through a distance into a torque must be used in a horizontal position for horizontal shaft dynamometers (± five degrees). For vertical shaft dynamometers, a pulley system may be used to convert the dynamometer's horizontal loading into the vertical plane.

(2) Calculate the indicated torque (IT) for each calibration weight to be used by:

$$IT = \text{Moment Arm (meters)} \times \text{Calibration Weight (Newtons)}$$

(3) Attach each calibration weight specified in § 90.305(b)(2) to the moment arm at the calibration distance determined in paragraph (a)(2) of this section. Record the power measurement equipment response (N–m) to each weight.

(4) Compare the torque value measured to the calculated torque.

(5) The measured torque must be within two percent of the calculated torque.

(6) If the measured torque is not within two percent of the calculated torque, adjust or repair the system. Repeat steps in paragraphs (a)(1) through (a)(6) of this section with the adjusted or repaired system.

(b) Option. A master load-cell or transfer standard may be used to verify the torque measurement system.

(1) The master load-cell and read out system must be calibrated using weights specified in § 90.305(b)(2).

(2) Attach the master load-cell and loading system.

(3) Load the dynamometer to a minimum of three equally spaced torque values as indicated by the master load-cell for each in-use range used.

(4) The in-use torque measurement must be within two percent of the torque measured by the master system for each load used.

(5) If the in-use torque is not within two percent of the master torque, adjust or repair the system. Repeat steps in paragraphs (b)(2) through (b)(4) of this section with the adjusted or repaired system.

(c) Calibrated resistors may not be used for engine flywheel torque transducer calibration, but may be used to span the transducer prior to engine testing.

(d) Other engine dynamometer system calibrations such as speed are performed as specified by the dynamometer manufacturer or as dictated by good engineering practice.

§ 90.307 Engine cooling system.

An engine cooling system is required with sufficient capacity to maintain the engine at normal operating temperatures as prescribed by the engine manufacturer. Auxiliary fan(s) may be used to maintain sufficient engine cooling during engine dynamometer operation.

§ 90.308 Lubricating oil and test fuels.

(a) *Lubricating oil.* Use the engine lubricating oil which meets the engine manufacturer's specifications for a particular engine and intended usage.

(1) Manufacturers must use engine lubricants representative of commercially available engine lubricants.

(2) For 2-stroke engines, the fuel/oil mixture ratio must be that which is recommended by the manufacturer.

(b) *Test Fuels—Certification.* (1) The manufacturer must use gasoline having the specifications, or substantially equivalent specifications approved by the Administrator, as specified in Table 3 in Appendix A of this subpart for exhaust emission testing of gasoline fueled engines. As an option, manufacturers may use the fuel specified in § 86.1313–94(a) of this chapter for gasoline fueled engines.

(2) Alternative fuels, such as natural gas, propane, and methanol, used for exhaust emission testing and service accumulation of alternative fuel spark-ignition engines must be representative of commercially available alternative fuels.

(i) The manufacturer shall recommend the alternative fuel to be used for certification testing and engine service accumulation in accordance with paragraph (b)(3) of this section.

(ii) The Administrator shall determine the alternative fuel to be used for testing and engine service accumulation, taking into consideration the alternative fuel recommended by the manufacturer.

(3) Other fuels may be used for testing provided:

(i) They are commercially viable;

(ii) Information acceptable to the Administrator is provided to show that only the designated fuel would be used in customer service; and

(iii) Fuel specifications are approved in writing by the Administrator prior to the start of testing.

(c) *Test Fuels—Service Accumulation.* Unleaded gasoline representative of commercial gasoline generally available through retail outlets must be used in service accumulation for gasoline-fueled spark-ignition engines. As an alternative, the certification test fuels specified under paragraph (b) of this section may be used for engine service accumulation. Leaded fuel may not be used during service accumulation. Additional fuel requirements for service accumulation are as follows:

§ 90.309 Engine intake air temperature measurement.

(a) The measurement location must be within 10 cm of the engine intake system (i.e., the air cleaner, for most engines.)

(b) The temperature measurements must be accurate to within ± 2 °C.

§ 90.310 Engine intake air humidity measurement.

This section refers to engines which are supplied with intake air other than the ambient air in the test cell (i.e., air which has been pumped directly to the engine air intake system). For engines which use ambient test cell air for the engine intake air, the ambient test cell humidity measurement may be used.

(a) *Humidity conditioned air supply.* Air that has had its absolute humidity altered is considered humidity-conditioned air. For this type of intake air supply, the humidity measurements must be made within the intake air supply system and after the humidity conditioning has taken place.

(b) *Unconditioned air supply.* Humidity measurements in unconditioned intake air supply systems must be made in the intake air stream entering the supply system. Alternatively, the humidity measurements can be measured within the intake air supply stream.

§ 90.311 Test conditions.

(a) General requirements. (1) Ambient temperature levels encountered by the test engine throughout the test sequence may not be less than 20 °C or more than 30 °C. All engines must be installed on the test bed at their design installation angle to prevent abnormal fuel distribution.

(2) Calculate all volumes and volumetric flow rates at standard conditions for temperature and pressure, and use these conditions consistently throughout all calculations. Standard conditions for temperature and pressure are 25 °C and 101.3 kPa.

(b) *Engine test conditions.* Measure the absolute temperature (designated as T and expressed in Kelvin) of the engine air at the inlet to the engine and the dry atmospheric pressure (designated as p_s and expressed in kPa), and determine the parameter f according to the following provisions for naturally aspirated engines:

$$f = \frac{99}{p_s} \times \left(\frac{T}{298}\right)^{0.7}$$

For a certification test to be recognized as valid, the parameter f shall be between the limits as shown below: $0.96<f<1.04$

§ 90.312 Analytical gases.

(a) The shelf life of a calibration gas may not be exceeded. The expiration date stated by the gas supplier must be recorded.

(b) *Pure gases.* The required purity of the gases is defined by the contamination limits specified in this subsection. The following gases must be available for operation:

(1) Purified nitrogen, also refered to as ''zero-grade nitrogen'' (Contamination ≤ 1 ppm C, ≤ 1 ppm CO, ≤ 400 ppm CO_2, ≤ 0.1 ppm NO);

(2) Purified oxygen (Purity 99.5 percent vol O_2);

(3) Hydrogen-helium mixture (40 ± 2 percent hydrogen, balance helium) (Contamination ≤ 1 ppm C, ≤ 400 ppm CO);

(4) Purified synthetic air, also refered to as ''zero air'' or ''zero gas''

(Contamination ≤ 1 ppm C, ≤ 1 ppm CO, ≤ 400 ppm CO_2, ≤ 0.1 ppm NO) (Oxygen content between 18–21 percent vol.).

(c) *Calibration and span gases.* (1) Calibration gas values are to be derived from NIST ''Standard Reference Materials'' (SRM's) and are to be single blends as specified in this subsection.

(2) Mixtures of gases having the following chemical compositions must be available:

C_3H_8 and purified synthetic air and/or C_3H_8 and purified nitrogen;
CO and purified nitrogen;
NO_X and purified nitrogen (the amount of NO_2 contained in this calibration gas must not exceed five percent of the NO content);
CO_2 and purified nitrogen.

Note: For the HFID or FID the manufacturer may choose to use as a diluent span gas and the calibration gas either purified synthetic air or purified nitrogen. Any mixture of C_3H_8 and purified synthetic air which contains a concentration of propane higher than what a gas supplier considers to be safe may be substituted with a mixture of C_3H_8 and purified nitrogen. However, the manufacturer must be consistent in the choice of diluent (zero air or purified nitrogen) between the calibration and span gases. If a manufacturer chooses to use C_3H_8 and purified nitrogen for the calibration gases, then purified nitrogen must be the diluent for the span gases.

(3) The true concentration of a span gas must be within ± two percent of the NIST gas standard. The true concentration of a calibration gas must be within ± one percent of the NIST gas standard. The use of precision blending devices (gas dividers) to obtain the required calibration gas concentrations is acceptable. Give all concentrations of calibration gas on a volume basis (volume percent or volume ppm).

(4) The gas concentrations used for calibration and span may also be obtained by means of a gas divider, diluting either with purified N_2 or with purified synthetic air. The accuracy of the mixing device must be such that the concentration of the diluted gases may be determined to within ± two percent.

(d) Oxygen interference check gases must contain propane with 350 ppmC ± 75 ppmC hydrocarbon. Determine the concentration value to calibration gas tolerances by chromatographic analysis of total hydrocarbons plus impurities or by dynamic blending. For gasoline fueled engines, oxygen contentration must be between 0 and 1 percent O_2. Nitrogen must be the predominant diluent with the balance oxygen.

(e) Fuel for the hydrocarbon flame ionization detector (HC-FID) must be a blend of 40 ± two percent hydrogen with the balance being helium. The mixture must contain less than one ppm equivalent carbon response; 98 to 100 percent hydrogen fuel may be used with advance approval of the Administrator.

(f) *Hydrocarbon analyzer burner air.* The concentration of oxygen must be within one mole percent of the oxygen concentration of the burner air used in the latest oxygen interference check (percent O_2I), see § 90.316(d). If the difference in oxygen concentration is greater than one mole percent, then the oxygen interference must be checked and, if necessary, the analyzer adjusted to meet the percent O_2I requirements. The burner air must contain less than two ppmC hydrocarbon.

§ 90.313 Analyzers required.

(a) *Analyzers.* Analyze measured gases with the following instruments:

(1) *Carbon monoxide (CO) analysis.* (i) The carbon monoxide analyzer shall be of the non-dispersive infrared (NDIR) absorption type.

(ii) The use of linearizing circuits is permitted.

(2) *Carbon dioxide (CO_2)* analysis. (i) The carbon dioxide analyzer shall be of the non-dispersive infrared (NDIR) absorption type.

(ii) The use of linearizing circuits is permitted.

(3) *Oxygen (O_2)* analysis. Oxygen (O_2) analyzers may be of the paramagnetic (PMD), zirconia (ZRDO) or electrochemical type (ECS).

(4) *Hydrocarbon (HC) analysis.* (i) For Raw Gas Sampling, the hydrocarbon analyzer shall be of the heated flame ionization (HFID) type. For constant volume sampling, the hydrocarbon analyzer may be of the flame ionization (FID) type or of the heated flame ionization (HFID) type.

(ii) For the HFID system, if the temperature of the exhaust gas at the sample probe is below 190° C, the temperature of the valves, pipe work, and so forth, must be controlled so as to maintain a wall temperature of 190° C ±11° C. If the temperature of the exhaust gas at the sample probe is above 190° C, the temperature of the valves, pipe work, and so forth, must be controlled so as to maintain a wall temperature greater than 180° C.

(iii) For the HFID analyzer, the detector, oven, and sample-handling components within the oven must be suitable for continuous operation at temperatures to 200° C. It must by capable of maintaining temperature within ±5.5° C of the set point.

(iv) Fuel and burner air must conform to the specifications in § 90.312.

(v) The percent of oxygen interference must be less than three percent, as specified in § 90.316(d).

(5) *Oxides of nitrogen (NO_X)* analysis.

(i) This analysis device consists of the following items:

(A) A NO_2 to NO converter. The NO_2 to NO converter efficiency must be at least 90 percent.

(B) An ice bath located after the NO_X converter (optional).

(C) A chemiluminescent detector (CLD) or heated chemiluminescent detector (HCLD).

(ii) The quench interference must be less than 3.0 percent as measured in § 90.325.

(b) *Other analyzers and equipment.* Other types of analyzers and equipment may be used if shown to yield equivalent results and if approved in advance by the Administrator.

(c) The following requirements must be incorporated as indicated in systems used for testing under this subpart.

(1) Carbon monoxide and carbon dioxide measurements must be made on a dry basis (for raw exhaust measurement only). Specific requirements for the means of drying the sample can be found in § 90.313(e).

(2) Calibration or span gases for the NO_X measurement system must pass through the NO_2 to NO converter.

(d) The electromagnetic compatibility (EMC) of the equipment must be on a level as to minimize additional errors.

(e) *Gas drying.* Chemical dryers are not an acceptable method of removing water from the sample. Water removal by condensation is acceptable. If water is removed by condensation, the sample gas temperature or sample dew point must be monitored either within the water trap or downstream and its temperature must not exceed 7° C. A water trap performing this function is an acceptable method. Means other than condensation may be used only with prior approval from the Administrator.

§ 90.314 Analyzer accuracy and specifications.

(a) *Measurement and accuracy—general.* The analyzers must have a measuring range which allows them to measure the concentrations of the exhaust gas sample pollutants with the accuracies shown in Table 2 in Appendix A of this subpart.

(1) *Precision.* The precision of the analyzer must be, at worst, two percent of full-scale concentration for each range used. The precision is defined as 2.5 times the standard deviation(s) of 10 repetitive responses to a given calibration or span gas.

(2) *Noise.* The analyzer peak-to-peak response to zero and calibration or span gases over any 10-second period must not exceed two percent of full-scale chart deflection on all ranges used.

(3) *Zero drift.* The analyzer zero-response drift during a one-hour period must be less than two percent of full-scale chart deflection on the lowest range used. The zero-response is defined as the mean response including noise to a zero-gas during a 30-second time interval.

(4) *Span drift.* The analyzer span drift during a one-hour period must be less than two percent of full-scale chart deflection on the lowest range used. The analyzer span is defined as the difference between the span-response and the zero-response. The span-response is defined as the mean response including noise to a span gas during a 30-second time interval.

(b) *Operating procedure for analyzers and sampling system.* Follow the start-up and operating instructions of the instrument manufacturer or use good engineering practice. Adhere to the minimum requirements given in §§ 90.316 through 90.325 and § 90.409.

(c) *Emission measurement accuracy—Bag sampling.* (1) Good engineering practice dictates that exhaust emission sample analyzer readings below 15 percent of full-scale chart deflection should generally not be used.

(2) Some high resolution read-out systems, such as computers, data loggers, and so forth, can provide sufficient accuracy and resolution below 15 percent of full scale. Such systems may be used provided that additional calibrations are made to ensure the accuracy of the calibration curves. The following procedure for calibration below 15 percent of full scale may be used:

Note to paragraph (c): If a gas divider is used, the gas divider must conform to the accuracy requirements as follows. The use of precision blending devices (gas dividers) to obtain the required calibration gas concentrations is acceptable, provided that the blended gases are accurate to within ± 1.5 percent of NIST gas standards or other gas standards which have been approved by the Administrator. This accuracy implies that primary gases used for blending must be ''named'' to an accuracy of at least ± one percent, traceable to NIST or other approved gas standards.

(i) Span the full analyzer range using a top range calibration gas. The span gases must be accurate to within ± two percent of NIST gas standards or other gas standards which have been approved by the Administrator.

(ii) Generate a calibration curve according to, and meeting the requirements, of the sections describing analyzer calibrations which are found in §§ 90.316, 90.317, 90.318, and 90.320.

(iii) Select a calibration gas (a span gas may be used for calibrating the CO_2 analyzer) with a concentration between the two lowest non-zero gas divider increments. This gas must be ''named'' to an accuracy of ± one percent of NIST gas standards or other standards approved by the Administrator.

(iv) Using the calibration curve fitted to the points generated in paragraphs (c)(2) (i) and (ii) of this section, check the concentration of the gas selected in paragraph (c)(2)(iii) of this section. The concentration derived from the curve must be within ± 2.3 percent (± 2.8 percent for CO_2 span gas) of the gas's original named concentration.

(v) Provided the requirements of paragraph (c)(2)(iv) of this section are met, use the gas divider with the gas selected in paragraph (c)(2)(iii) of this section and determine the remainder of the calibration points. Fit a calibration curve per §§ 90.316, 90.317, 90.318, and 90.320 of this chapter for the entire analyzer range.

(d) *Emission measurement accuracy—continuous sampling.* Analyzers used for continuous analysis must be operated such that the measured concentration falls between 15 and 100 percent of full-scale chart deflection. Exceptions to these limits are:

(1) The analyzer's response may be less than 15 percent or more than 100 percent of full scale if automatic range change circuitry is used and the limits for range changes are between 15 and 100 percent of full-scale chart deflection;

(2) The analyzer's response may be less than 15 percent of full scale if:

(i) The alternative in paragraph (c)(2) of this section is used to ensure that the accuracy of the calibration curve is maintained below 15 percent; or

(ii) The full-scale value of the range is 155 ppm (C) or less; or

(iii) The emissions from the engine are erratic and the integrated chart deflection value for the cycle is greater than 15 percent of full scale; or

(iv) The contribution of all data read below the 15 percent level is less than 10 percent by mass of the final test results.

§ 90.315 Analyzer initial calibration.

(a) *Warming-up time.* The warming-up time should be according to the recommendations of the manufacturer. If not specified, a minimum of two hours should be allowed for warming up the analyzers.

(b) *NDIR, FID, and HFID analyzer.* Tune and maintain the NDIR analyzer per the instrument manufacturer recommendations or specifications or using good engineering practice. The combustion flame of the FID or HFID analyzer must be optimized in order to meet the specifications in § 90.316(b).

(c) *Zero setting and calibration.* Using purified synthetic air (or nitrogen), set the CO, CO_2, NO_X, and HC analyzers at zero. Connect the appropriate calibrating gases to the analyzers and record the values. Use the same gas flow rates and pressure as when sampling exhaust.

(d) *Rechecking of zero setting.* Recheck the zero setting and, if necessary, repeat the procedure described in paragraph (c) of this section.

§ 90.316 Hydrocarbon analyzer calibration.

(a) Calibrate the FID and HFID hydrocarbon analyzer as described in this section. Operate the HFID to a set point ± 5.5° C between 185 and 197° C.

(b) *Initial and periodic optimization of detector response.* Prior to initial use and at least annually thereafter, adjust the FID and HFID hydrocarbon analyzer for optimum hydrocarbon response as specified in this paragraph. Alternative methods yielding equivalent results may be used, if approved in advance by the Administrator.

(1) Follow good engineering practices for initial instrument start-up and basic operating adjustment using the appropriate fuel (see § 90.312) and purified synthetic air or zero-grade nitrogen.

(2) Use of one of the following procedures is required for FID or HFID optimization:

(i) The procedure outlined in Society of Automotive Engineers (SAE) paper No. 770141, ''Optimization of a Flame Ionization Detector for Determination of Hydrocarbon in Diluted Automotive Exhausts;'' author, Glenn D. Reschke. This procedure has been incorporated by reference. See § 90.7.

(ii) The HFID optimization procedures outlined in § 86.331–79 of this chapter.

(iii) Alternative procedures may be used if approved in advance by the Administrator.

(3) After the optimum flow rates have been determined, record them for future reference.

(c) *Initial and periodic calibration.* Prior to initial use and monthly thereafter, or within one month prior to the certification test, the FID or HFID hydrocarbon analyzer must be calibrated on all normally used instrument ranges using the steps in this paragraph. Use the same flow rate and pressures as when analyzing samples. Introduce calibration gases directly at the analyzer. An optional method for dilute sampling described in § 86.1310–90(b)(3)(i) may be used.

(1) Adjust analyzer to optimize performance.

(2) Zero the hydrocarbon analyzer with purified synthetic air or zero-grade nitrogen.

(3) Calibrate on each used operating range with calibration gases having nominal concentrations between 10 and 90 percent of that range. A minimum of six evenly spaced points covering at least 80 percent of the 10 to 90 range (64 percent) is required (see following table).

Example calibration points (%)	Acceptable for calibration?
20, 30, 40, 50, 60, 70	No, range covered is 50 percent, not 64.
20, 30, 40, 50, 60, 70, 80, 90	Yes.
10, 25, 40, 55, 70, 85	Yes.
10, 30, 50, 70, 90	No, though equally spaced and entire range covered, a minimum of six points are needed.

For each range calibrated, if the deviation from a least-squares best-fit straight line is two percent or less of the value at each data point, calculate concentration values by use of a single calibration factor for that range. If the deviation exceeds two percent at any point, use the best-fit non-linear equation which represents the data to within two percent of each test point to determine concentration.

(d) *Oxygen interference optimization.* Prior to initial use and monthly thereafter, perform the oxygen interference optimization as described in this paragraph. Choose a range where the oxygen interference check gases will fall in the upper 50 percent. Conduct the test, as outlined in this paragraph, with the oven temperature set as required by the instrument manufacturer. Oxygen interference check gas specifications are found in § 90.312(d).

(1) Zero the analyzer.

(2) Span the analyzer with the 21 percent oxygen blend.

(3) Recheck zero response. If it has changed more than 0.5 percent of full scale repeat paragraphs (d)(1) and (d)(2) of this section to correct the problem.

(4) Introduce the five percent and 10 percent oxygen interference check gases.

(5) Recheck the zero response. If it has changed by more than ± one percent of full scale, repeat the test.

(6) Calculate the percent of oxygen interference (designated as percent O_2I) for each mixture in paragraph (d)(4) of this section according to the following equation.

$$\text{Percent } O_2I = \frac{B - \text{Analyzer response (ppmC)}}{B}(100)$$

$$\text{Analyzer response} = \left(\frac{A}{\text{\% of full-scale analyzer response due to A}}\right) \times (\text{\% of full-scale analyzer response due to B})$$

Where:

A = hydrocarbon concentration (ppmC) of the span gas used in paragraph (d)(2) of this section.

B = hydrocarbon concentration (ppmC) of the oxygen interference check gases used in paragraph (d)(4) of this section.

(7) The percent of oxygen interference (designated as percent O_2I) must be less than ± three percent for all required oxygen interference check gases prior to testing.

(8) If the oxygen interference is greater than the specifications, incrementally adjust the air flow above and below the manufacturer's specifications, repeating paragraphs (d)(1) through (d)(7) of this section for each flow.

(9) If the oxygen interference is greater than the specification after adjusting the air flow, vary the fuel flow and thereafter the sample flow, repeating paragraphs (d)(1) through (d)(7) of this section for each new setting.

(10) If the oxygen interference is still greater than the specifications, repair or replace the analyzer, FID fuel, or burner air prior to testing. Repeat this section with the repaired or replaced equipment or gases.

§ 90.317 Carbon monoxide analyzer calibration.

(a) Calibrate the NDIR carbon monoxide analyzer as described in this section.

(b) *Initial and periodic interference.* Prior to its initial use and annually thereafter, check the NDIR carbon monoxide analyzer for response to water vapor and CO_2:

(1) Follow good engineering practices for instrument start-up and operation. Adjust the analyzer to optimize performance on the most sensitive range to be used.

(2) Zero the carbon monoxide analyzer with either purified synthetic air or zero-grade nitrogen.

(3) Bubble a mixture of three percent CO_2 in N_2 through water at room temperature and record analyzer response.

(4) An analyzer response of more than one percent of full scale for ranges above 300 ppm full scale or more than three ppm on ranges below 300 ppm full scale requires corrective action. (Use of conditioning columns is one form of corrective action which may be taken.)

(c) *Initial and periodic calibration.* Prior to its initial use and monthly thereafter, or within one month prior to the certification test, calibrate the NDIR carbon monoxide analyzer.

(1) Adjust the analyzer to optimize performance.

(2) Zero the carbon monoxide analyzer with either purified synthetic air or zero-grade nitrogen.

(3) Calibrate on each used operating range with carbon monoxide-in-N_2 calibration gases having nominal concentrations between 10 and 90 percent of that range. A minimum of six

evenly spaced points covering at least 80 percent of the 10 to 90 range (64 percent) is required (see following table).

Example calibration points (%)	Acceptable for calibration?
20, 30, 40, 50, 60, 70	No, range covered is 50 percent, not 64.
20, 30, 40, 50, 60, 70, 80, 90	Yes.
10, 25, 40, 55, 70, 85	Yes.
10, 30, 50, 70, 90	No, though equally spaced and entire range covered, a minimum of six points are needed.

Additional calibration points may be generated. For each range calibrated, if the deviation from a least-squares best-fit straight line is two percent or less of the value at each data point, calculate concentration values by use of a single calibration factor for that range. If the deviation exceeds two percent at any point, use the best-fit non-linear equation which represents the data to within two percent of each test point to determine concentration.

§ 90.318 Oxides of nitrogen analyzer calibration.

(a) Calibrate the chemiluminescent oxides of nitrogen analyzer as described in this section.

(b) *Initial and Periodic Interference*: Prior to its initial use and monthly thereafter, or within one month prior to the certification test, check the chemiluminescent oxides of nitrogen analyzer for NO_2 to NO converter efficiency. Figure 1 in Appendix B of this subpart is a reference for paragraphs (b)(1) through (11) of this section:

(1) Follow good engineering practices for instrument start-up and operation. Adjust the analyzer to optimize performance.

(2) Zero the oxides of nitrogen analyzer with purified synthetic air or zero-grade nitrogen.

(3) Connect the outlet of the NO_X generator to the sample inlet of the oxides of nitrogen analyzer which has been set to the most common operating range.

(4) Introduce into the NO_X generator analyzer-system an NO-in-nitrogen (N_2) mixture with an NO concentration equal to approximately 80 percent of the most common operating range. The NO_2 content of the gas mixture must be less than five percent of the NO concentration.

(5) With the oxides of nitrogen analyzer in the NO mode, record the concentration of NO indicated by the analyzer.

(6) Turn on the NO_X generator O_2 (or air) supply and adjust the O_2 (or air) flow rate so that the NO indicated by the analyzer is about 10 percent less than indicated in paragraph (b)(5) of this section. Record the concentration of NO in this NO+O_2 mixture as value ''c.''

(7) Switch the NO_X generator to the generation mode and adjust the generation rate so that the NO measured on the analyzer is 20 percent of that measured in paragraph (b)(5) of this section. There must be at least 10 percent unreacted NO at this point. Record the concentration of residual NO as value ''d.''

(8) Switch the oxides of nitrogen analyzer to the NO_X mode and measure total NO_X. Record this value as ''a.''

(9) Switch off the NO_X generator but maintain gas flow through the system. The oxides of nitrogen analyzer will indicate the NO_X in the NO+O_2 mixture. Record this value as ''b''.

(10) Turn off the NO_X generator O_2 (or air) supply. The analyzer will now indicate the NO_X in the original NO-in-N_2 mixture. This value should be no more than five percent above the value indicated in paragraph (b)(4) of this section.

(11) Calculate the efficiency of the NO_X converter by substituting the concentrations obtained into the following equation:

$$\text{percent efficiency} = \left(1 + \frac{a-b}{c-d}\right) \times 100$$

Where:

a = concentration obtained in paragraph (b)(8),

b = concentration obtained in paragraph (b)(9),

c = concentration obtained in paragraph (b)(6),

d = concentration obtained in paragraph (b)(7).

If converter efficiency is less than 90 percent, corrective action will be required.

(c) *Initial and periodic calibration*. Prior to its initial use and monthly thereafter, or within one month prior to the certification test, calibrate the chemiluminescent oxides of nitrogen analyzer on all normally used instrument ranges. Use the same flow rate as when analyzing samples. Proceed as follows:

(1) Adjust analyzer to optimize performance.

(2) Zero the oxides of nitrogen analyzer with purified synthetic air or zero-grade nitrogen.

(3) Calibrate on each normally used operating range with NO-in-N_2 calibration gases having nominal concentrations between 10 and 90 percent of that range. A minimum of six evenly spaced points covering at least 80 percent of the 10 to 90 range (64 percent) is required (see following table).

Example calibration points (%)	Acceptable for calibration?
20, 30, 40, 50, 60, 70	No, range covered is 50 percent, not 64
20, 30, 40, 50, 60, 70, 80, 90	Yes.
10, 25, 40, 55, 70, 85	Yes.
10, 30, 50, 70, 90	No, though equally spaced and entire range covered, a minimum of six points are needed.

Additional calibration points may be generated. For each range calibrated, if the deviation from a least-squares best-fit straight line is two percent or less of the value at each data point, calculate concentration values by use of a single calibration factor for that range. If the deviation exceeds two percent at any point, use the best-fit non-linear equation which represents the data to within two percent of each test point to determine concentration.

(d) The initial and periodic interference, system check, and calibration test procedures specified in

§ 86.332–79 of this chapter may be used in lieu of the procedures specified in this section.

§ 90.319 NO_X converter check.

(a) The efficiency of the converter used for the conversion of NO_2 to NO is tested as given in paragraphs (a)(1) through (a)(8) of this section.

(1) Using the test setup as shown in Figure 1 in Appendix B of this subpart (see also § 90.318 of this chapter) and the procedure described in paragraphs (a)(2) through (a)(8) of this section, test the efficiency of converters by means of an ozonator.

(2) Calibrate the HCLD or CLD in the most common operating range following the manufacturer's specifications using zero and span gas (the NO content of which must amount to about 80 percent of the operating range and the NO_2 concentration of the gas mixture less than five percent of the NO concentration). The NO_X analyzer must be in the NO mode so that the span gas does not pass through the converter. Record the indicated concentration.

(3) Calculate the efficiency of the NO_X converter as described in § 90.318(b).

(4) Via a T-fitting, add oxygen continuously to the gas flow until the concentration indicated is about 20 percent less than the indicated calibration concentration given in paragraph (a)(2) of this section. Record the indicated concentration ''c.'' The ozonator is kept deactivated throughout the process.

(5) Activate the ozonator to generate enough ozone to bring the NO concentration down to about 20 percent (minimum 10 percent) of the calibration concentration given in paragraph (a)(2) of this section. Record the indicated concentration ''d.''

Note: If, with the analyzer in the most common range, the NO_X converter can not give a reduction from 80 percent to 20 percent, then use the highest range which will give the reduction.

(6) Switch the NO analyzer to the NO_X mode which means that the gas mixture (consisting of NO, NO_2, O_2 and N_2) now passes through the converter. Record the indicated concentration ''a.''

(7) Deactivate the ozonator. The mixture of gases described in paragraph (a)(6) of this section passes through the converter into the detector. Record the indicated concentration ''b.''

(8) Switched to NO mode with the ozonator deactivated, the flow of oxygen or purified synthetic air is also shut off. The NO_X reading of the analyzer may not deviate by more than ± five percent of the theoretical value of the figure given in paragraph (a)(2) of this section.

(b) The efficiency of the converter must be tested prior to each calibration of the NO_X analyzer.

(c) The efficiency of the converter may not be less than 90 percent.

§ 90.320 Carbon dioxide analyzer calibration.

(a) Prior to its initial use and monthly thereafter, or within one month prior to the certification test, calibrate the NDIR carbon dioxide analyzer as follows:

(1) Follow good engineering practices for instrument start-up and operation. Adjust the analyzer to optimize performance.

(2) Zero the carbon dioxide analyzer with either purified synthetic air or zero-grade nitrogen.

(3) Calibrate on each normally used operating range with carbon dioxide-in-N_2 calibration or span gases having nominal concentrations between 10 and 90 percent of that range. A minimum of six evenly spaced points covering at least 80 percent of the 10 to 90 range (64 percent) is required (see following table).

Example calibration points (%)	Acceptable for Calibration?
20, 30, 40, 50, 60, 70	No, range covered is 50 percent, not 64.
20, 30, 40, 50, 60, 70, 80, 90	Yes.
10, 25, 40, 55, 70, 85	Yes.
10, 30, 50, 70, 90	No, though equally spaced and entire range covered, a minimum of six points are needed.

Additional calibration points may be generated. For each range calibrated, if the deviation from a least-squares best-fit straight line is two percent or less of the value at each data point, calculate concentration values by use of a single calibration factor for that range. If the deviation exceeds two percent at any point, use the best-fit non-linear equation which represents the data to within two percent of each test point to determine concentration.

(b) The initial and periodic interference, system check, and calibration test procedures specified in §§ 86.316, 86.319, 86.320, 86.321, and 86.322 of this chapter may be used in lieu of the procedures in this section.

§ 90.321 NDIR analyzer calibration.

(a) *Detector optimization.* If necessary, follow the instrument manufacturer's instructions for initial start-up and basic operating adjustments.

(b) *Calibration curve.* Develop a calibration curve for each range used as follows:

(1) Zero the analyzer.

(2) Span the analyzer to give a response of approximately 90 percent of full-scale chart deflection.

(3) Recheck the zero response. If it has changed more than 0.5 percent of full scale, repeat the steps given in paragraphs (b)(1) and (b)(2) of this section.

(4) Record the response of calibration gases having nominal concentrations between 10 and 90 percent of full-scale concentration. A minimum of six evenly spaced points covering at least 80 percent of the 10 to 90 range (64 percent) is required (see following table).

Example calibration points (%)	Acceptable for calibration?
20, 30, 40, 50, 60, 70	No, range covered is 50 percent, not 64.
20, 30, 40, 50, 60, 70, 80, 90	Yes.
10, 25, 40, 55, 70, 85	Yes.
10, 30, 50, 70, 90	No, though equally spaced and entire range covered, a minimum of six points are needed.

(5) Generate a calibration curve. The calibration curve must be of fourth order or less, have five or fewer coefficients, and be of the form of the following equation (1) or (2). Include zero as a data point. Compensation for known impurities in the zero gas can be made to the zero-data point. The calibration curve must fit the data points within two percent of point or one percent of full scale, whichever is less.

$$y = Ax^4 + Bx^3 + Cx^2 + Dx + E \quad (1)$$

$$y = \frac{x}{Ax^4 + Bx^3 + Cx^2 + Dx + E} \quad (2)$$

where:

y = concentration
x = chart deflection

(6) Option. A new calibration curve need not be generated if:

(i) A calibration curve conforming to paragraph (b)(5) of this section exists; or,

(ii) The responses generated in paragraph (b)(4) of this section are within one percent of full scale or two percent of point, whichever is less, of the responses predicted by the calibration curve for the gases used in paragraph (b)(4) of this section.

(7) If multiple range analyzers are used, the lowest range used must meet the curve fit requirements below 15 percent of full scale.

(c) *Linear calibration criteria.* If any range is within two percent of being linear, a linear calibration may be used. To determine if this criterion is met:

(1) Perform a linear least-square regression on the data generated. Use an equation of the form y=mx, where x is the actual chart deflection and y is the concentration.

(2) Use the equation z=y/m to find the linear chart deflection (designated as z) for each calibration gas concentration (designated as y).

(3) Determine the linearity (designated as percent L) for each calibration gas by:

$$\% L = \frac{(z - x)}{\text{Full-scale linear chart deflection}} \times (100)$$

(4) The linearity criterion is met if the %L is less than ± two percent for each data point generated. For each emission test, use a calibration curve of the form Y=mx. The slope (designated as m) is defined for each range by the spanning process.

§ 90.322 Calibration of other equipment.

Calibrate other test equipment used for testing as often as required by the test equipment manufacturer or as necessary according to good engineering practice.

§ 90.323 Analyzer bench checks.

(a) Prior to initial use and after major repairs, verify that each analyzer complies with the specifications given in Table 2 in Appendix A of this subpart.

(b) If a stainless steel NO_2 to NO converter is used, condition all new or replacement converters. The conditioning consists of either purging the converter with air for a minimum of four hours or until the converter efficiency is greater than 90 percent. The converter must be at operational temperature while purging. Do not use this procedure prior to checking converter efficiency on in-use converters.

§ 90.324 Analyzer leakage check.

(a) *Vacuum side leak check.* (1) Check any location within the analysis system where a vacuum leak could affect the test results.

(2) The maximum allowable leakage rate on the vacuum side is 0.5 percent of the in-use flow rate for the portion of the system being checked. The analyzer flows and bypass flows may be used to estimate the in-use flow rates.

(3) The sample probe and the connection between the sample probe and valve V2, see Figure 2 in Appendix B of this subpart, may be excluded from the leak check.

(b) *Pressure side leak check.* The maximum allowable leakage rate on the pressure side is five percent of the in-use flow rate.

§ 90.325 Analyzer interference checks.

(a) Gases present in the exhaust other than the one being analyzed can interfere with the reading in several ways. Positive interference occurs in NDIR and PMD instruments when the interfering gas gives the same effect as the gas being measured, but to a lesser degree. Negative interference occurs in NDIR instruments by the interfering gas broadening the absorption band of the measured gas, and in CLD instruments by the interfering gas quenching the radiation. The interference checks described in this section are to be made initially and after any major repairs that could affect analyzer performance.

(b) *CO analyzer water and CO_2 interference checks.* Bubble through water at room temperature a CO_2 span gas having a concentration of between 80 percent and 100 percent inclusive of full scale of the maximum operating range used during testing and record the analyzer response. For dry measurements, this mixture may be introduced into the sample system prior to the water trap. The analyzer response must not be more than one percent of full scale for ranges equal to or above 300 ppm or more than three ppm for ranges below 300 ppm.

(c) *NO^X* analyzer quench check. The two gases of concern for CLD (and HCLD) analyzers are CO_2 and water vapor. Quench responses to these two gases are proportional to their concentrations and, therefore, require test techniques to determine quench at the highest expected concentrations experienced during testing.

(1) *NO_X analyzer CO_2 quench check.* (i) Pass a CO_2 span gas having a concentration of 80 percent to 100 percent of full scale of the maximum operating range used during testing through the CO_2 NDIR analyzer and record the value ''a.''

(ii) Dilute the CO_2 span gas approximately 50 percent with NO span gas and pass through the CO_2 NDIR and CLD (or HCLD). Record the CO_2 and NO values as ''b'' and ''c'' respectively.

(iii) Shut off the CO_2 and pass only the NO span gas through the CLD (or HCLD). Record the NO value as ''d.''

(iv) Calculate the percent CO_2 quench as follows, not to exceed three percent:

$$\% CO_2 \text{ quench} = 100 \times \left(1 - \frac{(c \times a)}{(d \times a) - (d \times b)}\right) \times (a/b)$$

Where:

a=Undiluted CO_2 concentration (percent)

b=Diluted CO_2 concentration (percent)

c=Diluted NO concentration (ppm)

d=Undiluted NO concentration (ppm)

(2) *NO_X analyzer water quench check.* (i) This check applies to wet measurements only. An NO span gas having a concentration of 80 percent to 100 percent of full scale of a normal operating range is passed through the CLD (or HCLD) and the response recorded as ''D''. The NO span gas is then bubbled through water at room temperature and passed through the CLD (or HCLD) and the analyzer's response recorded as AR. Determine and record the analyzer's absolute operating pressure and the bubbler water temperature. (It is important that the NO span gas contains minimal NO_2 concentration for this check. No allowance for absorption of NO_2 in water has been made in the following quench calculations.)

(ii) Calculations for water quench must consider dilution of the NO span gas with water vapor and scaling of the water vapor concentration of the mixture to that expected during testing. Determine the mixture's saturated vapor pressure (designated as Pwb) that corresponds to the bubbler water temperature. Calculate the water concentration (''Z1'', percent) in the mixture by the following equation:

$$Z1 = 100 \times \frac{Pwb}{GP}$$

where GP is the analyzer's standard operating pressure (pascals).

(iii) Calculate the expected dilute NO span gas and water vapor mixture concentration (designated as D1) by the following equation:

$$D1 = D \times \left(1 - \frac{Z1}{100}\right)$$

§ 90.326 Pre- and post-test analyzer calibration.

Calibrate the range of each analyzer used during the engine exhaust emission test prior to and after each test in accordance with the following:

(a) Make the calibration by using a zero gas and a span gas. The span gas value must be between 75 percent and 100 percent of full scale, inclusive, of the measuring range.

(b) Use the same analyzer(s) flow rate and pressure as that used during exhaust emission test sampling.

(c) Warm-up and stabilize the analyzer(s) before the calibration is made.

(d) If necessary clean and/or replace filter elements before calibration is made.

(e) Calibrate analyzer(s) as follows:

(1) Zero the analyzer using the appropriate zero gas. Adjust analyzer zero if necessary. Zero reading should be stable.

(2) Span the analyzer using the appropriate span gas for the range being calibrated. Adjust the analyzer to the calibration set point if necessary.

(3) Re-check zero and span set points.

(4) If the response of the zero gas or span gas differs more than one percent of full scale, then repeat paragraphs (e)(1) through (3) of this section.

§ 90.327 Sampling system requirements.

(a) *Sample component surface temperature.* For sampling systems which use heated components, use engineering judgment to locate the coolest portion of each component (pump, sample line section, filters, and so forth) in the heated portion of the sampling system that has a separate source of power or heating element. Monitor the temperature at that location. If several components are within an oven, then only the surface temperature of the component with the largest thermal mass and the oven temperature need be measured.

(b) If water is removed by condensation, monitor the sample gas temperature or sample dew point either within the water trap or downstream. It may not exceed 7° C.

§ 90.328 Measurement equipment accuracy/calibration frequency table.

(a) The accuracy of measurements must be such that the maximum tolerances shown in Table 2 in Appendix A of this subpart are not exceeded.

(b) All equipment and analyzers must be calibrated according to the frequencies shown in Table 2 in Appendix A of this subpart.

(c) Prior to initial use and after major repairs, bench check each analyzer (see § 90.323).

(d) Calibrate equipment as specified in § 90.306 and §§ 90.315 through 90.322.

(e) At least monthly, or after any maintenance which could alter calibration, perform the following calibrations and checks.

(1) Leak check the vacuum side of the system (see § 90.324(a)).

(2) Verify that the automatic data collection system (if used) meets the requirements found in Table 2 in Appendix A of this subpart.

(3) Check the fuel flow measurement instrument to insure that the specifications in Table 2 in Appendix A of this subpart are met.

(f) Verify that all NDIR analyzers meet the water rejection ratio and the CO_2 rejection ratio as specified in § 90.325.

(g) Verify that the dynamometer test stand and power output instrumentation meet the specifications in Table 2 in Appendix A of this subpart.

§ 90.329 Catalyst thermal stress test.

(a) *Oven characteristics.* The oven used for thermally stressing the test catalyst must be capable of maintaining a temperature of 500° C ± 5° C and 1000° C ± 10° C.

(b) *Evaluation gas composition.* (1) A synthetic exhaust gas mixture is used for evaluating the effect of thermal stress on catalyst conversion efficiency.

(2) The synthetic exhaust gas mixture must have the following composition:

Constituent	Volume percent	Parts per million
Carbon Monoxide	1	.....
Oxygen	1.3	.....
Carbon Dioxide	3.8	.....
Water Vapor	10	.....
Sulfer dioxide	.....	20
Oxides of nitrogen	.....	280
Hydrogen	.....	3500
Hydrocarbon*	.....	4000

Constituent	Volume percent	Parts per million
Nitrogen = Balance		

*Propylene/propane ratio = 2/1.

Appendix A to Subpart D of Part 90—Tables

TABLE 1.—SYMBOLS USED IN SUBPART D

Symbol	Term	Unit
CO	Carbon monoxide.	
CO_2	Carbon dioxide.	
NO	Nitric oxide.	
NO_2	Nitrogen dioxide.	
NO_X	Oxides of nitrogen.	
O_2	Oxygen.	
conc	Concentration (ppm by volume)	ppm
f	Engine specific parameter considering atmospheric conditions.	
F_{FCB}	Fuel specific factor for the carbon balance calculation.	
F_{FD}	Fuel specific factor for exhaust flow calculation on dry basis.	
F_{FH}	Fuel specific factor representing the hydrogen to carbon ratio.	
F_{FW}	Fuel specific factor for exhaust flow calculation on wet basis.	
G_{AIRW}	Intake air mass flow rate on wet basis	kg/h
G_{AIRD}	Intake air mass flow rate on dry basis	kg/h
G_{EXHW}	Exhaust gas mass flow rate on wet basis	kg/h
G_{Fuel}	Fuel mass flow rate	kg/h
H	Absolute humidity (water content related to dry air)	gr/kg
i	Subscript denoting an individual mode.	
K_H	Humidity correction factor.	
L	Percent torque related to maximum torque for the test mode	percent
mass	Pollutant mass flow	g/h
$n_{d,i}$	Engine speed (average at the i'th mode during the cycle)	1/min
P_s	Dry atmospheric pressure	kPa
P_d	Test ambient saturation vapor pressure at ambient temperature	kPa
P	Gross power output uncorrected	kW
P_{AUX}	Declared total power absorbed by auxiliaries fitted for the test	kW
P_M	Maximum power measured at the test speed under test conditions	kW
P_i	$P_i = P_{M,i} + P_{AUX,\ i}$.	
P_B	Total barometric pressure (average of the pre-test and post-test values)	kPa
R_a	Relative humidity of the ambient air	percent
T	Absolute temperature at air inlet	C
T_{be}	Air temperature after the charge air cooler (if applicable) (average)	C
T_{clout}	Coolant temperature outlet (average)	C
T_{Dd}	Absolute dew point temperature	C
$T_{d,i}$	Torque (average at the i'th mode during the cycle)	N-m
T_{SC}	Temperature of the intercooled air	C
$T_{ref.}$	Reference temperature	C
V_{EXHD}	Exhaust gas volume flow rate on dry basis	m^3/h
V_{AIRW}	Intake air volume flow rate on wet basis	m^3/h
P_B	Total barometric pressure	kPa
V_{EXHW}	Exhaust gas volume flow rate on wet basis	m^3/h
WF	Weighing factor.	
WF_E	Effective weighing factor.	

TABLE 2.—MEASUREMENT CALIBRATION ACCURACY AND FREQUENCY

No.	Item	Permissible deviation from reading*		Calibration frequency
		Non-idle	Idle	
1	Engine speed	± 2 %	Same	Monthly or within one month prior to the certification test.
2	Torque	± 2 %		Monthly or within one month prior to the certification test.
3	Fuel consumption	± 2 %	±5%	Monthly or within one month prior to the certification test.
4	Air consumption	± 2 %	±5%	As required.
5	Coolant temperature	± 2° C	Same	As required.
6	Lubricant temperature	± 2° C	Same	As required.
7	Exhaust back pressure	± 5 %	Same	As required.
8	Inlet depression	± 5 %	Same	As required.
9	Exhaust gas temperature	± 15° C	Same	As required.
10	Air inlet temperature (combustion air).	± 2° C	Same	As required.
11	Atmospheric pressure	± 0.5 %	Same	As required.

TABLE 2.—MEASUREMENT CALIBRATION ACCURACY AND FREQUENCY—Continued

No.	Item	Permissible deviation from reading *		Calibration frequency
		Non-idle	Idle	
12	Humidity (combustion air) (relative).	± 3.0 %	Same	As required.
13	Fuel temperature	± 2° C	Same	As required.
14	Temperature with regard to dilution system.	± 2° C	Same	As required.
15	Dilution air humidity	± 3 % absolute	Same	As required.
16	HC analyzer	± 2 %**	Same	Monthly or within one month prior to the certification test.
17	CO analyzer	± 2 %**	Same	Monthly or within one month prior to the certification test.
18	NO_X analyzer	± 2 %**	Same	Monthly or within one month prior to the certification test.
19	NO_X converter check	90 %	Same	Monthly or within one month prior to the certification test.
20	CO_2 analyzer	± 2 %**	Same	Monthly or within one month prior to the certification test.

* All accuracy requirements pertain to the final recorded value which is inclusive of the data acquisition system.
** If reading is under 100 ppm then the accuracy shall be ± 2 ppm.

TABLE 3.—TEST FUEL SPECIFICATIONS

Item	Property	Tolerances	Procedure (ASTM) [1]
Sulfur, ppm max.	339		D 2622–92
Benzene, max. %	1.5		D 3606–92
RVP, psi	8.7	±0.2	D 5191–93a
Octane, R+M/2	87.3	±0.5	D 2699–92 D 2700–92
IBP, ° C	32.8	±11.0	D 86–93
10 % point, ° C	53.3	±5.5	D 86–93
50 % point, ° C	103.3	±5.5	D 86–93
90 % point, ° C	165.6	±5.5	D 86–93
End Point, max. ° C	212.8		D 86–93
Phosphorus, g/liter, max.	0.02		D 3231–89
Lead, g/liter, max.	0.02		
Manganese, g/liter, max.	0.004		
Aromatics, %	32.0	±4.0	D 1319–89
Olefins, %	9.2	±4.0	D 1319–89
Saturates, %	Remainder		D 1319–89

[1] All ASTM procedures in this table have been incorporated by reference. See § 90.7.

Appendix B to Subpart D—Figures

BILLING CODE 6560–50–P

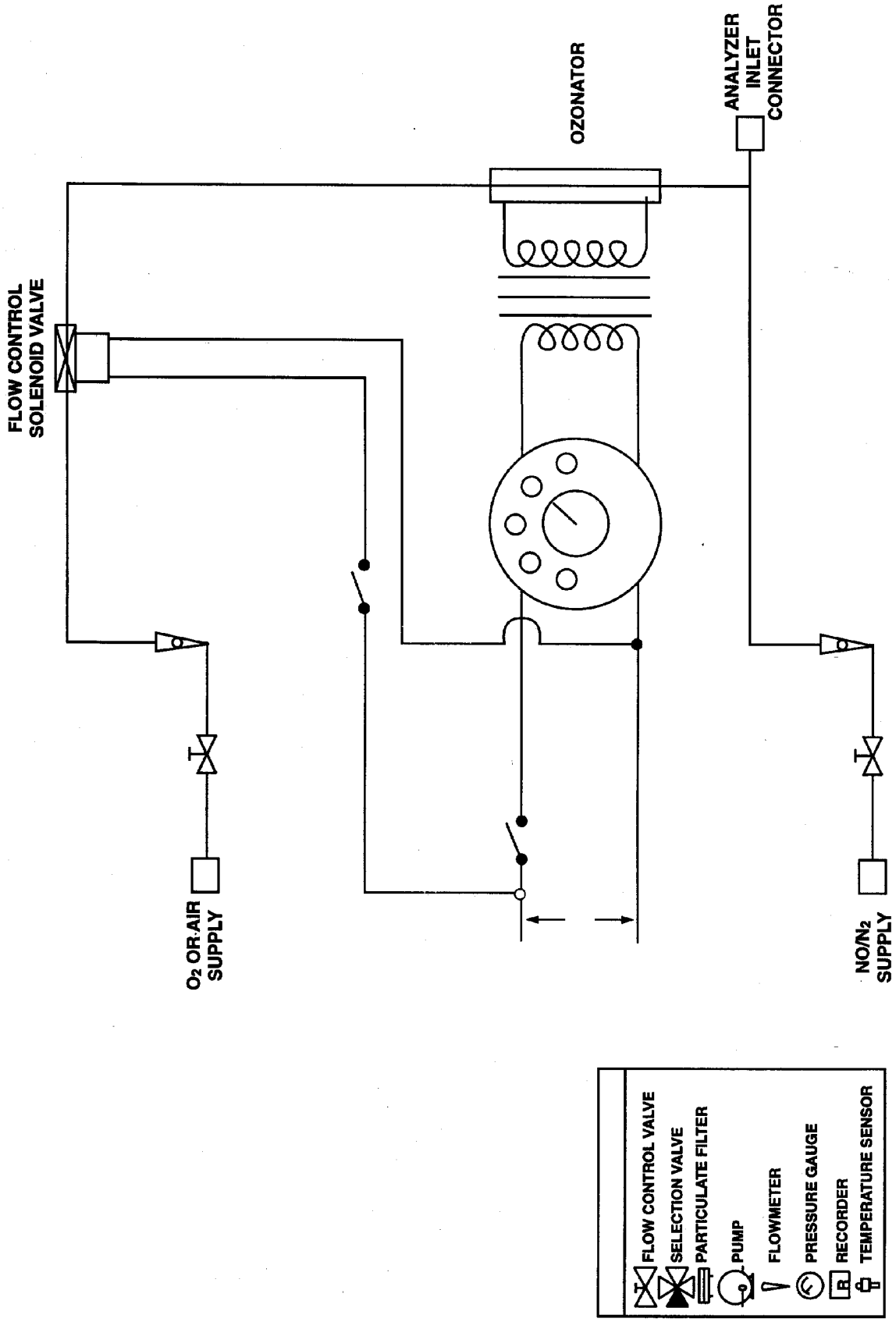

Figure 1. — NOx Converter Efficiency Detector

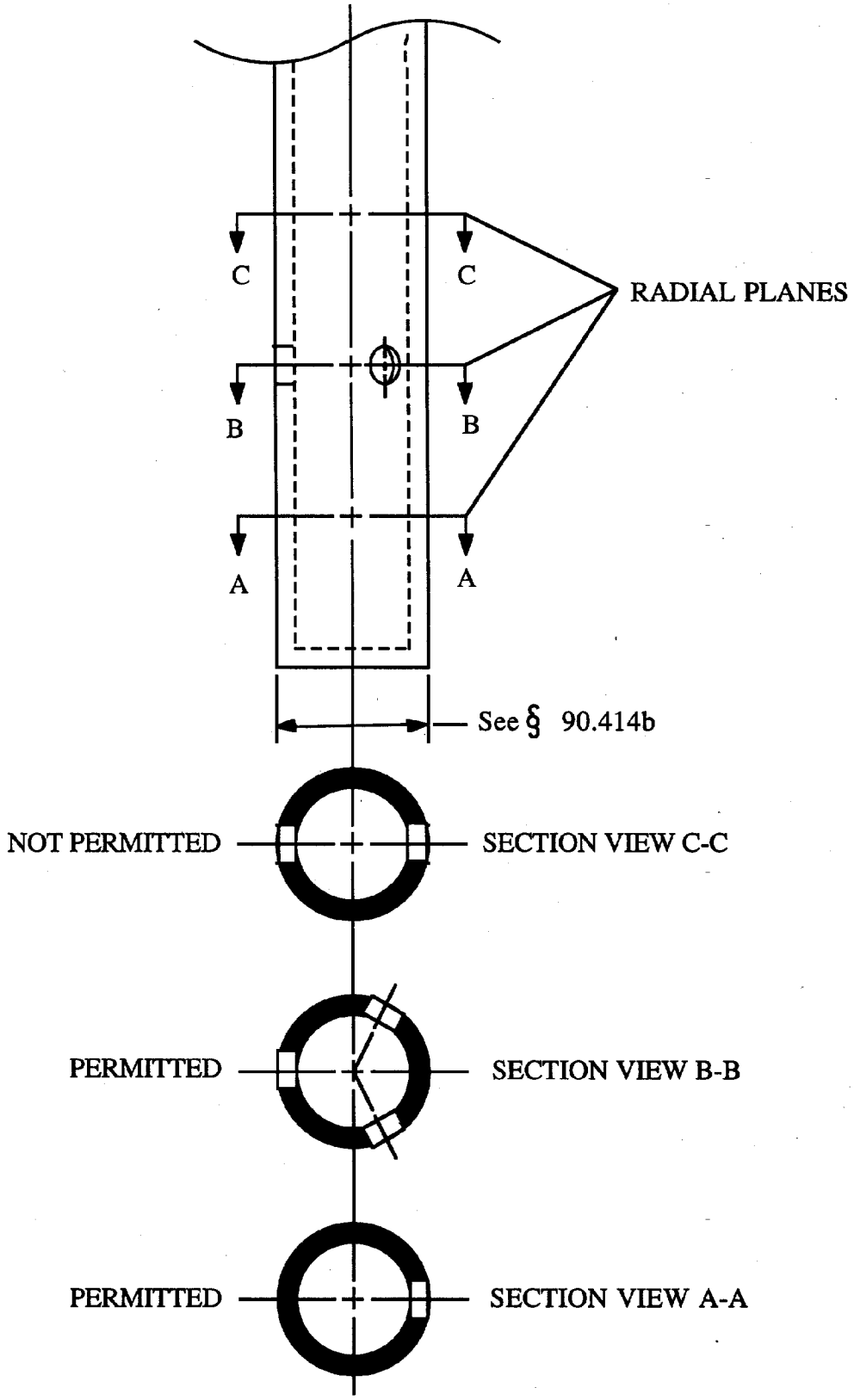

Figure 2.—Sample Probe and Typical Hole Spacings

BILLING CODE 6560–50–C

Subpart E—Gaseous Exhaust Test Procedures

§ 90.401 Applicability.

(a) This subpart describes the procedures to follow in order to perform exhaust emission tests on new nonroad spark-ignition engines and vehicles subject to the provisions of subpart A of part 90. Provisions specific to raw gas sampling are in § 90.414 through § 90.419, provisions specific to constant volume sampling are in § 90.420 through § 90.426. All other sections in this subpart apply to both raw gas sampling and constant volume sampling except where indicated otherwise.

(b) Requirements for emission test equipment and calibrating this equipment are found in subpart D of this part.

§ 90.402 Definitions.

The definitions in § 90.3, § 90.101, and § 90.302 apply to this subpart.

§ 90.403 Symbols, acronyms, and abbreviations.

(a) The acronyms and abbreviations in § 90.5 apply to this subpart.

(b) The symbols in Table 1 in Appendix A to Subpart D apply to this subpart.

§ 90.404 Test procedure overview.

(a) The test consists of prescribed sequences of engine operating conditions to be conducted on an engine dynamometer or equivalent load and speed measurement device. The exhaust gases generated during engine operation are sampled either raw or dilute and specific components are analyzed through the analytical system.

(b) The test is designed to determine the brake-specific emissions of hydrocarbons, carbon monoxide, carbon dioxide, and oxides of nitrogen and fuel consumption. The test consists of three different test cycles which are application specific for engines which span the typical operating range of nonroad spark-ignition engines. Two cycles exist for Class I and II engines and one is for Class III, IV, and V engines (see § 90.103(a) and § 90.116(b) for the definitions of Class I—V engines). The test cycles for Class I and II engines consist of one idle mode and five power modes at one speed (rated or intermediate). The test cycle for Class III, IV, and V engines consists of one idle mode at idle speed and one power mode at rated speed. These procedures require the determination of the concentration of each pollutant, fuel flow, and the power output during each mode. The measured values are weighted and used to calculate the grams of each pollutant emitted per brake kilowatt hour (g/kW-hr).

(c)(1) When an engine is tested for exhaust emissions the complete engine must be tested, with all emission control devices installed and functioning.

(2) On air cooled engines, the cooling fan must be installed. For engines whose cooling fan serves a dual purpose, such as an air pump/blower, an external fan may be used to provide the engine with cooling air and the original cooling fan may be removed.

(d) All emission control systems installed on or incorporated in the application must be functioning during all procedures in this subpart. In case of component malfunction or failure, no maintenance is allowed without prior approval from the Administrator, in accordance with § 90.119.

§ 90.405 Recorded information.

(a) Record the information described in this section for each test, where applicable.

(b) *Test data; general.* (1) Engine identification number.

(2) Engine emission control system.

(3) Test operator(s).

(4) Number of hours of operation accumulated on the engine prior to beginning the warm-up portion of the test (to the nearest tenth hour).

(5) Fuel identification.

(6) For 2-stroke engines, fuel/oil mixture ratio.

(7) Date of most recent analyzer bench calibration.

(8) All pertinent instrument information such as tuning, gain, serial numbers, detector number, and calibration curve(s). As long as this information is traceable, it may be summarized by system number or analyzer identification numbers.

(c) *Test data; pre-test.* (1) Date and time of day.

(2) Test number.

(3) Barometric pressure; as an option, barometric pressure can be measured as a modal measurement instead of or in addition to a pre- and post-test measurement.

(4) Recorder chart or equivalent. Identify for each test segment zero traces for each range used, and span traces for each range used.

(d) *Test data; modal.* (1) Recorder chart or equivalent. Identify for each test mode the emission concentration traces and the associated analyzer range(s).

(2) Observed engine torque.

(3) Observed engine rpm.

(4) Intake air flow if applicable.

(5) Test cell temperature and humidity for each mode.

(6) For raw gas testing; fuel flow for each mode. Fuel flow measurement is not required for dilute testing, but is allowed. If the fuel flow measurement is a volume measurement system, record the fuel temperature in the measurement system for fuel density corrections to the mass flow rate. If the fuel temperature is within 3° C of the calibration temperature, no density correction is required.

(7) Engine intake temperature and humidity, if applicable.

(8) Exhaust mixing chamber surface temperature, if applicable.

(9) Exhaust sample line temperature, if applicable.

(10) Engine fuel inlet pressure.

(e) *Test data; post-test.* (1) Recorder chart or equivalent. Identify the hang-up check.

(2) Recorder chart or equivalent. Identify the zero traces for each range used and the span traces for each range used.

(3) Total number of hours of operation accumulated on the engine (to the nearest tenth hour).

(4) Barometric pressure, post-test segment.

§ 90.406 Engine parameters to be measured and recorded.

Measure or calculate, then record the engine parameters in Table 1 in Appendix A of this subpart.

§ 90.407 Engine inlet and exhaust systems.

(a) The engine manufacturer is liable for exhaust emission compliance over the full range of air inlet filter systems and exhaust muffler systems.

(b) The air inlet filter system and exhaust muffler system combination used on the test engine must be the systems expected to yield the highest emission levels.

§ 90.408 Pre-test procedures.

(a) *Engine service accumulation and stabilization procedure.* Use the service accumulation procedure determined by the manufacturer for exhaust emission stabilizing of an engine, consistent with good engineering practice (see § 90.118).

(1) The manufacturer determines, for each engine family, the number of hours at which the engine exhaust emission control system combination is stabilized for emission testing. However, this stabilization procedure may not exceed 12 hours. The manufacturer must maintain, and provide to the Administrator upon request, a record of the rationale used in making this determination. If the manufactuer can document that at some time prior to the full 12 hour service accumulation period the engine emissions are decreasing for the remainder of the 12

hours, the service accumulation may be completed at that time. The manufacturer may elect to accumulate 12 hours on each test engine within an engine family without making this determination.

(2) During service accumulation, the fuel and lubricants specified in § 90.308 must be used.

(3) Engine maintenance during service accumulation is allowed only in accordance with § 90.118.

(b) *Engine pre-test preparation.* (1) Drain and charge the fuel tank(s) with the specified test fuel (see § 90.308(b)) to 50 percent of the tank's nominal capacity. If an external fuel tank is used, the engine fuel inlet system pressure must be typical of what the engine will see in use.

(2) Operate the engine on the dynamometer measuring the fuel consumption (fuel consumption required only for raw gas sampling method) and torque before and after the emission sampling equipment is installed, including the sample probe, using the modes specified in the following table.

Engine class	Test cycle	Operating mode
I, II	A	6
I, II	B	1
III, IV, V	C	1

These modes are from Table 2 in Appendix A of this subpart. The emission sampling equipment may not significantly affect the operational characteristics of the engine (typically the results should agree within five percent).

(c) *Analyzer pre-test procedures.* (1) If necessary, warm up and stabilize the analyzer(s) before calibrations are performed.

(2) Replace or clean the filter elements and then leak check the system as required by § 90.324(a). If necessary, allow the heated sample line, filters, and pumps to reach operating temperature.

(3) Perform the following system checks:

(i) If necessary, check the sample-line temperature. Heated FID sample line temperature must be maintained between 110° C and 230° C; a heated NO_X sample line temperature must be maintained between 60° C and 230° C.

(ii) Check that the system response time has been accounted for prior to sample collection data recording.

(iii) A HC hang-up check is permitted (see § 90.413(e)).

(4) Check analyzer zero and span before and after each test at a minimum. Further, check analyzer zero and span any time a range change is made or at the maximum demonstrated time span for stability for each analyzer used.

(d) Check system flow rates and pressures and reset, if necessary.

§ 90.409 Engine dynamometer test run.

(a) *Engine and dynamometer start-up.* (1) Only adjustments in accordance with § 90.119 may be made to the test engine prior to starting a test.

(2) If necessary, warm up the dynamometer as recommended by the dynamometer manufacturer or use good engineering practice.

(3) At the manufacturer's option, the engine can be run with the throttle in a fixed position or by using the engine's governor (if the engine is manufactured with a governor). In either case, the engine speed and load must meet the requirements specified in paragraph (b)(12) of this section.

(b) Each test consists of the following steps.

(1) Record the general test data as specified in § 90.405(b).

(2) Precondition the engine in the following manner;

(i) Operate the engine at a power greater than or equal to 50 percent maximum power at the appropriate speed (rated or intermediate) for 20 minutes;

(ii) Option. If the engine has been operating on service accumulation for a minimum of 40 minutes, the service accumulation may be substituted for step (i).

(3) Record all pre-test data specified in § 90.405(c).

(4) Start the test cycle (see § 90.410) within five minutes of the completion of the steps required by paragraph (b)(2) of this section.

(5) Modes are to be performed in the numerical order specified for the appropriate test cycle (see ''Mode Points'' Table 2 in Appendix A of this subpart).

(6) For Class I and II engines, during the maximum torque mode calculate the torque corresponding to 75, 50, 25, and 10 percent of the maximum observed torque (see Table 2 in Appendix A to this subpart).

(7) Once engine speed and load are set for a mode, run the engine for a sufficient period of time to achieve thermal stability. At the manufacturer's option, determine and document the appropriate criterion for thermal stability for each engine family. If the manufacture chooses not to make this determination, an acceptable alternative is to run the engine at each mode until the cylinder head temperature remains within a 10°C bandwidth for three minutes. Cylinder head temperature may be measured at the base of the spark plug. After stability is achieved, emission measurements are initiated.

(8) Record all modal data specified in § 90.405(d) for a minimum time period of the last two minutes of each mode. Longer averaging periods are acceptable, but the data averaged must be from a continuous time period. The duration of time during which this data is recorded is referred to as the ''sampling period.'' The data collected during the sampling period is used for modal emission calculations.

(9) Continuously record the analyzer's response to the exhaust gas during each mode.

(10) Modes may be repeated.

(11) If a delay of more than one hour occurs between the end of one mode and the beginning of another mode, the test is void and must be restarted at paragraph (b)(1) of this section.

(12) The engine speed and load must be maintained within the requirements of § 90.410 during the sampling period of each mode. If this requirement is not met, the mode is void and must be restarted.

(13) If at any time during a mode the test equipment malfunctions or the specifications in § 90.410 can not be met, the test is void and must be aborted. Corrective action should be taken and the test restarted.

(14) If at any time during an operating mode the engine stalls, restart the engine immediately and continue the test starting with the steps required by paragraph (b)(6) of this section. If the engine will not restart within five minutes the test is void. If maintenance is required on the engine, advance approval from the Administrator is required as specified in § 90.119. After corrective action is taken, the engine may be rescheduled for testing. Report the reason for the malfunction (if determined) and the corrective action taken.

(15) Fuel flow and air flow during the idle condition may be determined just prior to or immediately following the dynamometer sequence, if longer times are required for accurate measurements. If the dilute sampling method (Constant Volume Sampling) is used, neither fuel flow nor air flow measurements are required.

(c) *Exhaust gas measurements.* (1) Measure HC, CO, CO_2, and NO_X concentration in the exhaust sample.

(2) Each analyzer range that may be used during a test mode must have the zero and span responses recorded prior to the start of the test. Only the range(s) used to measure the emissions during the test is required to have its zero and

span recorded after the completion of the test. Depending on the stability of each individual analyzer, more frequent zero checks or spans between modes may be necessary.

(3) It is permitted to change filter elements between modes.

(4) A leak check is permitted between modes.

(5) A hang-up check is permitted between modes (see § 90.413).

(6) If, during the emission measurement portion of a mode, the value of the gauges downstream of the NDIR analyzer(s) G3 or G4 (see Figure 2 in Appendix B of Subpart D), differs by more than ±0.5kPa from the pretest value, the test mode is void.

§ 90.410 Engine test cycle.

(a) Follow the appropriate 6-mode test cycle for Class I and II engines and 2-mode test cycle for Class III, IV, and V engines when testing spark-ignition engines (see Table 2 in Appendix A of this subpart).

(b) During each non-idle mode, hold both the specified speed and load within ± five percent of point. During the idle mode, hold speed within ± ten percent of the manufacturer's specified idle engine speed.

(c) If the operating conditions specified in paragraph (b) of this section for Class I and II engines using Mode Points 2, 3, 4, and 5 cannot be maintained, the Administrator may authorize deviations from the specified load conditions. Such deviations may not exceed 10 percent of the maximum torque at the test speed. The minimum deviations, above and below the specified load, necessary for stable operation shall be determined by the manufacturer and approved by the Administrator prior to the test run.

(d) Do not include power generated during the idle mode, Mode 11, in the calculation of emission results.

§ 90.411 Post-test analyzer procedures.

(a) Perform a HC hang-up check within 60 seconds of the completion of the last mode in the test. Use the following procedure:

(1) Introduce a zero gas or room air into the sample probe or valve V2 (see Figure 2 in Appendix B of Subpart D) to check the ''hangup zero'' response. Simultaneously start a time measurement.

(2) Select the lowest HC range used during the test.

(3) Within four minutes of beginning the time measurement in paragraph (a)(1) of this section, the difference between the zero gas response and the hang-up zero response may not be greater than 5.0 percent of full scale or 10 ppmC, whichever is greater.

(b) Begin the analyzer span checks within six minutes after the completion of the last mode in the test. Record for each analyzer the zero and span response for each range used during the preceding test or test segment.

(c) If during the test, the filter element(s) were replaced or cleaned, a vacuum check must be performed per § 90.324(a) immediately after the span checks. If the vacuum side leak check does not meet the requirements of § 90.324(a), the test is void.

(d) Read and record the post-test data specified in § 90.405(e).

(e) For a valid test, the analyzer drift between the before-segment and after-segment span checks for each analyzer must meet the following requirements:

(1) The span drift (defined as the change in the difference between the zero response and the span response) may not exceed two percent of full-scale chart deflection for each range used.

(2) The zero response drift may not exceed two percent of full-scale chart deflection for each range used above 155 ppm (or ppm C), or three percent of full-scale chart deflection for each range below 155 ppm (or ppm C).

§ 90.412 Data logging.

(a) A computer or any other automatic data collection (ADC) device(s) may be used as long as the system meets the requirements of this subpart.

(b) Determine from the data collection records the analyzer responses corresponding to the end of each mode.

(c) Record data at a minimum of rate of one Hz (one time per second).

(d) Determine the final value for power by averaging the individually calculated power points for each value of speed and torque recorded during the sampling period. As an alternative, the final value for power can be calculated from the average values for speed and torque, collected during the sampling period.

(e) Determine the final value for CO_2, CO, HC, and NO_X concentrations by averaging the concentration of each point taken during the sample period for each mode.

§ 90.413 Exhaust sample procedure—gaseous components.

(a) *Automatic data collection equipment requirements.* The analyzer response may be read by automatic data collection (ADC) equipment such as computers, data loggers, and so forth. If ADC equipment is used, the following is required:

(1) For dilute grab (''bag'') sample analysis, the analyzer response must be stable at greater than 99 percent of the final reading for the dilute exhaust sample. The ADC must store a single value representing the average chart deflection over a 10-second stabilized period. Alternatively, the ADC may store the individual instantaneous chart deflections collected over a 10-second stabilized period.

(2) For continuous analysis systems, the ADC must store a single value representing the average integrated concentration over a measurement period. Alternatively, the ADC may store the individual instantaneous values collected during the measurement period.

(3) The chart deflections or average integrated concentrations required in paragraphs (a)(1) and (a)(2) of this section may be stored on long-term computer storage devices such as computer tapes, storage discs, punch cards, or they may be printed in a listing for storage. In either case a chart recorder is not required and records from a chart recorder, if they exist, need not be stored.

(4) If ADC equipment is used to interpret analyzer values, the ADC equipment is subject to the calibration specifications of the analyzer as if the ADC equipment is part of analyzer system.

(b) Data records from any one or a combination of analyzers may be stored as chart recorder records.

(c) *Grab sample analysis.* For dilute grab sample analysis perform the following procedure:

(1) Calibrate analyzers using the procedure described in § 90.326.

(2) Record the most recent zero and span response as the pre-analysis values.

(3) Measure and record HC, CO, CO_2, and NO_X concentrations in the exhaust sample bag(s) and background sample bag(s) using the same flow rates and pressures.

(4) Good engineering practice dictates that exhaust emission sample bag analyzer readings below 15 percent of full scale should generally not be used.

(5) A post-analysis zero and span calibration check of each range must be performed and the values recorded. The number of events that may occur between the pre- and post-checks is not specified. However, the difference between pre-analysis zero and span values (recorded in paragraph (c)(2) or (c)(3) of this section) versus those recorded for the post-analysis check may not exceed the zero drift limit or the span drift limit of two percent of full-scale chart deflection for any range used. Otherwise the analysis is void.

(d) *Continuous sample analysis.* For continuous sample analysis perform the following procedure:

(1) Calibrate analyzers using the procedure described in § 90.326.

(2) Leak check portions of the sampling system that operate at negative gauge pressures when sampling and allow heated sample lines, filters, pumps, and so forth to stabilize at operating temperature.

(3) Option: Determine the HC hang-up for the FID or HFID sampling system:

(i) Zero the analyzer using zero gas introduced at the analyzer port.

(ii) Flow zero gas through the overflow sampling system. Check the analyzer response.

(iii) If the overflow zero response exceeds the analyzer zero response by two percent or more of the FID or HFID full-scale deflection, hang-up is indicated and corrective action must be taken (see paragraph (e) of this section).

(iv) The complete system hang-up check specified in paragraph (e) of this section is recommended as a periodic check.

(4) If necessary, recalibrate analyzer using the procedure specified in paragraph (d)(1) of this section.

(5) Good engineering practice dictates that analyzers used for continuous analysis should be operated such that the measured concentration falls between 15 percent and 100 percent of full scale.

(6) Record the most recent zero and span response as the pre-analysis values.

(7) Collect background HC, CO, CO_2, and NO_X in a sample bag (for dilute exhaust sampling only, see § 90.422).

(8) Perform a post-analysis zero and span check for each range used at the conditions specified in paragraph (d)(1) of this section. Record these responses as the post-analysis values.

(9) Neither the zero drift nor the span drift between the pre-analysis and post-analysis checks on any range used may exceed three percent for HC, or two percent for NO_X, CO, and CO_2, of full-scale chart deflection, or the test is void. (If the HC drift is greater than three percent of full-scale chart deflection, HC hang-up is likely.)

(10) Determine background levels of HC, NO_X, CO, or CO_2 (for dilute exhaust sampling only) by the grab (''bag'') technique outlined in paragraph (c) of this section.

(e) *Hydrocarbon hang-up*. If HC hang-up is indicated, the following procedure may be performed:

(1) Fill a clean, evacuated sample bag with background air.

(2) Zero and span the HFID at the analyzer ports.

(3) Analyze the background air sample bag through the analyzer ports.

(4) Analyze the background air through the entire sample probe system.

(5) If the difference between the readings obtained is two ppm or more, clean the sample probe and the sample line.

(6) Reassemble the sample system, heat to specified temperature, and repeat the procedure in paragraphs (e)(1) through (e)(5) of this section.

§ 90.414 Raw gaseous exhaust sampling and analytical system description.

(a) *Schematic drawing.* An example of a sampling and analytical system which may be used for testing under this subpart is shown in Figure 2 in Appendix B of Subpart D. All components or parts of components that are wetted by the sample or corrosive calibration gases must be either chemically cleaned stainless steel or inert material (e.g., polytetrafluoroethylene resin). The use of ''gauge savers'' or ''protectors'' with nonreactive diaphragms to reduce dead volumes is permitted.

(b) *Sample probe.* (1) The sample probe must be a straight, closed end, stainless steel, multi-hole probe. The inside diameter may not be greater than the inside diameter of the sample line +0.03 cm. The wall thickness of the probe may not be greater than 0.10 cm. The fitting that attaches the probe to the exhaust pipe must be as small as practical in order to minimize heat loss from the probe.

(2) The probe must have a minimum of three holes. The spacing of the radial planes for each hole in the probe must be such that they cover approximately equal cross-sectional areas of the exhaust duct. See Figure 2 in Appendix B of Subpart D. The angular spacing of the holes must be approximately equal. The angular spacing of any two holes in one plane may not be 180° ± 20° (i.e., section view C–C of Figure 2 in Appendix B of Subpart D). The holes should be sized such that each has approximately the same flow. If only three holes are used, they may not all be in the same radial plane.

(3) The exhaust gas probe must be located in a position which yields a well mixed, homogenous sample of the engine exhaust. The probe must extend radially across the exhaust gas stream. The probe must pass through the approximate center and must extend across at least 80 percent of the exhaust gas stream. The exact position of the probe may vary from engine family to engine family.

(c) *Mixing chamber.* The exhaust mixing chamber is located in the exhaust system between the muffler and the sample probe. The mixing chamber is an optional component of the raw gas sampling equipment.

(1) The internal volume of the mixing chamber may not be less than ten times the cylinder displacement of the engine under test. The shape of the mixing chamber must be such that it provides a well mixed, homogenous sample at the sample probe location.

(2) Couple the mixing chamber as closely as possible to the engine muffler.

(3) Maintain the inner surface of the mixing chamber at a minimum temperature of 179° C.

(4) Thermocouple temperature monitoring of the mixing chamber inner surface is required to assure wall temperatures specified in paragraph (c)(3) of this section. The temperature measurement must be accurate to within ± 5° C.

(5) The sample probe must extend radially across the exit of the mixing chamber. The probe must pass through the approximate center and must extend across at least 80 percent of the diameter of the exit. The exact position of the probe may vary from engine family to engine family. The probe must be located in a position which yields a well mixed, homogenous sample of the exhaust.

(d) *Sample transfer line.* (1) The maximum inside diameter of the sample line may not exceed 1.32 cm.

(2) If valve V2 in Figure 1 of Appendix B of this subpart is used, the sample probe must connect directly to valve V2. The location of optional valve V2 in Figure 1 of Appendix B of Subpart D may not be greater than 1.22 m from the exhaust duct.

(3) The location of optional valve V16, Figure 1 of Appendix B of this subpart, may not be greater than 61 cm from the sample pump. The leakage rate for this section on the pressure side of the sample pump may not exceed the leakage rate specification for the vacuum side of the pump.

(e) *Venting.* All vents, including analyzer vents, bypass flow, and pressure relief vents, of regulators should be vented in such a manner as to avoid endangering personnel in the immediate area.

(f) Any variation from the specifications in this subpart, including performance specifications and emission detection methods, may be used only with prior approval by the Administrator.

(g) Additional components, such as instruments, valves, solenoids, pumps, switches, and so forth, may be employed to provide additional information and coordinate the functions of the component systems.

(h) The following requirements must be incorporated in each system used for raw testing under this subpart.

(1) Take the sample for all components with one sample probe and split it internally to the different analyzers.

(2) Heat the sample transport system from the engine exhaust pipe to the HC analyzer for the raw gas sampling method as indicated in Figure 1 in Appendix B of this subpart. The NO_X analyzer for the raw gas sampling method may be heated as indicated in Figure 1 in Appendix B of this subpart. The HC analyzer and the NO_X analyzer for the dilute sampling method may be heated as indicated in Figure 1 in Appendix B of this subpart.

§ 90.415 Raw gaseous sampling procedures.

Fit all heated sampling lines with a heated filter to extract solid particles from the flow of gas required for analysis. The sample line for HC measurement must be heated. The sample line for CO, CO_2 and NO_X analysis may be heated or unheated.

§ 90.416 Intake air flow measurement specifications.

(a) If used, the engine intake air flow measurement method used must have a range large enough to accurately measure the air flow over the engine operating range during the test. Overall measurement accuracy must be two percent of full-scale value of the measurement device for all modes except the idle mode. For the idle mode, the measurement accuracy must be ± five percent or less of the full-scale value. The Administrator must be advised of the method used prior to testing.

(b) When an engine system incorporates devices that affect the air flow measurement (such as air bleeds, air injection, pulsed air, and so forth) resulting in understated exhaust emission results, make corrections to the exhaust emission results to account for such effects.

§ 90.417 Fuel flow measurement specifications.

(a) Fuel flow measurement is required only for raw testing. Fuel flow is allowed for dilute testing. If the measured fuel flow is used in the dilute calculations for brake-specific fuel consumption (see § 90.426(e)), the fuel flow instrument must meet the requirements of this section.

(b) The fuel flow measurement instrument must have a minimum accuracy of one percent of full-scale flow rate for each measurement range used. An exception is allowed for the idle mode. For this mode, the minimum accuracy is ± five percent of full-scale flow rate for the measurement range used. The controlling parameters are the elapsed time measurement of the event and the weight or volume measurement.

§ 90.418 Data evaluation for gaseous emissions.

For the evaluation of the gaseous emissions recording, record the last four minutes of each mode and determine the average values for HC, CO, CO_2 and NO_X during each mode from the average concentration readings determined from the corresponding calibration data. Longer averaging times are acceptable, but the sampling period which is reported must be a continuous set of data.

§ 90.419 Raw emission sampling calculations—gasoline fueled engines.

(a) Derive the final weighted brake-specific mass emission rates (g/kW–hr) through the steps described in this section.

(b) *Air and fuel flow method.* If both air and fuel flow mass rates are measured, use the following equations to determine the weighted emission values for the test engine:

$$W_{NO_X} = \left(G_{AIRD} + G_{FUEL}\right) \times \frac{M_{NO_2}}{M_{exh}} \times WNO_X \times K_H \times \frac{1}{10^6}$$

$$W_{HC} = \left(G_{AIRD} + G_{FUEL}\right) \times \frac{M_{HC_{exh}}}{M_{exh}} \times WHC \times \frac{1}{10^6}$$

$$W_{CO} = \left(G_{AIRD} + G_{FUEL}\right) \times \frac{M_{CO}}{M_{exh}} \times WCO \times \frac{1}{10^2}$$

Where:

W_{HC}=Mass rate of HC in exhaust [g/hr],

G_{AIRD}=Intake air mass flow rate on dry basis [g/hr],

G_{FUEL}=Fuel mass flow rate [g/hr],

M_{HCexh}=Molecular weight of hydrocarbons in the exhaust, see the following equation:

$$M_{HC_{exh}} = 12.01 + \alpha 1.008 + \beta 16.00$$

Where:

α=Hydrogen/carbon atomic ratio of the fuel

β=Oxygen/carbon atomic ratio of the fuel

M_{exh}=Molecular weight of the total exhaust, see the following equation:

$$M_{exh} = \frac{M_{HC_{exh}} \times WHC}{10^6} + \frac{28.01 \times WCO}{10^2} + \frac{44.01 \times WCO_2}{10^2} + \frac{46.01 \times WNO_X}{10^6} + \frac{32.00 \times WO_2}{10^2} + \frac{2.016 \times WH_2}{10^2} + 18.01 \times (1 - K) + \frac{28.01 \times \left[100 - \frac{WHC}{10^4} - WCO - WCO_2 - \frac{WNO_X}{10^4} - WO_2 - WH_2 - 100 \times (1 - K)\right]}{10^2}$$

Where:

WHC=HC volume concentration in exhaust, ppmC wet

WCO=CO percent concentration in the exhaust, wet

DCO=CO percent concentration in the exhaust, dry

WCO_2=CO_2 percent concentration in the exhaust, wet

DCO_2=CO_2 percent concentration in the exhaust, dry

WNO_X=NO volume concentration in exhaust, ppm wet

WO_2=O_2 percent concentration in the exhaust, wet

WH_2=H_2 percent concentration in exhaust, wet

K=correction factor to be used when converting dry measurements to a wet basis. Therefore, wet concentration=dry concentration × K,

where K is:

$$K = \frac{1}{1 + 0.005 \times (DCO + DCO_2) \times \alpha - 0.01 DH_2}$$

DH_2=H_2 percent concentration in exhaust, dry, calculated from the following equation:

$$DH_2 = \frac{0.5 \times \alpha \times DCO \times (DCO + DCO_2)}{DCO + (3 \times DCO_2)}$$

W_{co}=Mass rate of CO in exhaust, [g/hr]

M_{co}=Molecular weight of CO=28.01

W_{NOx}=Mass rate of NO_X in exhaust, [g/hr]

M_{NO2}=Molecular weight of NO_2=46.01

K_H=Factor for correcting the effects of humidity on NO_2 formation for 4-stroke gasoline small engines, see the equation below :

$$K_H = \frac{1}{1 - 0.0329(H - 10.71)}$$

Where:

H=absolute humidity of the intake air in grams of moisture per kilogram of dry air, see § 90.426(f) for a method by which H can be calculated.

For two-stroke gasoline engines, K_H should be set to 1.

(c) *Fuel flow method*. The following equations are to be used when fuel flow is selected as the basis for mass emission calculations using the raw gas method.

$$W_{HC} = \frac{M_{HC_{exh}}}{M_F} \times \frac{G_{FUEL}}{TC} \times \frac{WHC}{10^4}$$

$$W_{CO} = \frac{M_{CO}}{M_F} \times \frac{G_{FUEL}}{TC} \times WCO$$

$$W_{NO_X} = \frac{M_{NO_X}}{M_F} \times \frac{G_{FUEL}}{TC} \times \frac{WNO_X}{10^4} \times K_H$$

Where:

W_{HC}=Mass rate of HC in exhaust, [g/hr]

$M_{HC\ exh}$=Molecular weight of hydrocarbons in the exhaust, see following equation:

$$M_{HC_{exh}} = M_C + \alpha M_H + \beta M_O$$

M_C=Molecular weight of carbon=12.01 [g/mole]

M_H=Molecular weight of hydrogen=1.008 [g/mole]

M_O=Molecular weight of oxygen=16.00 [g/mole]

α=Hydrogen to carbon ratio of the test fuel

β=Oxygen to carbon ratio of the test fuel

M_F=Molecular weight of test fuel

G_{FUEL}=Fuel mass flow rate, [g/hr]

TC=Total carbon in exhaust, see following equation:

$$TC = WCO + WCO_2 + \frac{WHC}{10^4}$$

WCO=CO percent concentration in the exhaust, wet

WCO_2=CO_2 percent concentration in the exhaust, wet

DCO=CO percent concentration in the exhaust, dry

DCO_2=CO_2 percent concentration in the exhaust, dry

WHC=HC volume concentration in exhaust, ppmC wet

WNO_X=NO_X volume concentration in exhaust, ppm wet

K=correction factor to be used when converting dry measurements to a wet basis. Therefore, wet concentration=dry concentration x K, where K is:

$$K = \frac{1}{1 + 0.005 \times (DCO + DCO_2) \times \alpha - 0.01\, DH_2}$$

DH_2=H_2 percent concentration in exhaust, dry, calculated from the following equation:

$$DH_2 = \frac{0.5 \times \alpha \times DCO \times (DCO + DCO_2)}{DCO + (3 \times DCO_2)}$$

W_{CO}=Mass rate of CO in exhaust, [g/hr]

M_{CO}=Molecular weight of CO=28.01

WNO_X=Mass rate of NO_X in exhaust, [g/hr]

MNO_2=Molecular weight of NO_2=46.01

K_H=Factor for correcting the effects of humidity on NO_2 formation for 4-stroke gasoline small engines, see the following equation:

$$K_H = \frac{1}{1 - 0.0329(H - 10.71)}$$

Where:

H=specific humidity of the intake air in grams of moisture per kilogram of dry air.

For two-stroke gasoline engines, K_H should be set to 1.

(d) Calculate the final weighted brake-specific emission rate for each individual gas component using the following equation:

$$A_{WM} = \frac{\sum_i^n (W_i \times WF_i)}{\sum_i^n (P_i \times WF_i)}$$

Where:

A_{WM}=Final weighted brake-specific mass emission rate (HC, CO, NO_X) [g/kW-hr]

W_i=Mass emission rate during mode i [g/hr]

WF_i=Weighting factors for each mode according to § 90.410(a)

P_i=Gross average power generated during mode i [kW], calculated from the following equation,

$$P_i \frac{2\pi}{60{,}000} \times \text{speed} \times \text{torque}$$

Where:

speed=average engine speed measured during mode i [rev./minute]

torque=average engine torque measured during mode i [N-m] (e) Compute the final reported brake-specific fuel

$$BSFC = \frac{\sum_{i}^{n} \left(G_{FUEL_i} \times WF_i\right)}{\sum_{i}^{n} \left(P_i \times F_i\right)}$$

consumption (BSFC) by use of the following formula:

Where:

BSFC=brake-specific fuel consumption in grams of fuel per kilowatt-hour (g/kW-hr).

$G_{FUEL\ i}$=Fuel mass flow rate of the engine during mode i [g/hr]

WF_i=Weighting factors for each mode according to § 90.410(a)

P_i=Gross average power generated during mode i [kW].

§ 90.420 CVS concept of exhaust gas sampling system.

(a) A dilute exhaust sampling system is designed to directly measure the true mass of emissions in engine exhaust without the necessity of measuring either fuel flow or intake air flow. This is accomplished by diluting the exhaust produced by a test engine with ambient background air and measuring the total diluted exhaust flow rate and the concentration of emissions within the dilute flow. Total mass flow of an emission is then easily calculated.

(b) A constant volume sampler (CVS) is typically used to control the total amount of dilute flow through the system. As the name implies, a CVS restricts flow to a known value dependent only on the dilute exhaust temperature and pressure.

(c) For the testing described in this subpart, a CVS must consist of: a mixing tunnel into which the engine exhaust and dilutant (background) air are dumped; a dilute exhaust flow metering system; a dilute exhaust sample port; a background sample port; a dilute exhaust sampling system; and a background sampling system.

(1) *Mixing tunnel.* The mixing tunnel must be constructed such that complete mixing of the engine exhaust and background air is assured prior to the sampling probe.

(2) *Exhaust flow metering system.* A dilute exhaust flow metering system must be used to control the total flow rate of the dilute engine exhaust as described in § 90.421.

(3) *Exhaust sample port.* A dilute exhaust sample port must be located in or downstream of the mixing tunnel at a point where complete mixing of the engine exhaust and background air is assured.

(4) *Background sample port.* A dilute exhaust sample port must be located in the stream of background air before it is mixed with the engine exhaust. The background probe must draw a representative sample of the background air during each sampling mode.

(5) *Exhaust sampling system.* The dilute exhaust sampling system controls the flow of samples from the mixing tunnel to the analyzer system. This could be either a continuous sampling system or grab (bag) sampling system. If a critical flow venturi (CFV) is used on the dilute exhaust sample probe, this system must assure that the sample CFV is in choke flow during testing. If no CFV is used, this system must assure a constant volumetric flow rate through the dilute exhaust sample probe or must incorporate electronic flow compensation.

(6) *Background sampling system.* The background sampling system controls the flow of samples from the background air supply to the analyzer system. This could be either a continuous sampling system or grab (bag) sampling system. This system must assure a constant volumetric flow rate through the background sample probe.

§ 90.421 Dilute gaseous exhaust sampling and analytical system description.

(a) *General.* The exhaust gas sampling system described in this section is designed to measure the true mass of gaseous emissions in the exhaust of nonroad small spark-ignition engines. This system utilizes the Constant Volume Sampling (CVS) concept (described in § 90.420) of measuring mass emissions of HC, NO_X, CO, and CO_2. Grab sampling for individual modes is an acceptable method of dilute testing for all constituents, HC, NO_X, CO, and CO_2. Continuous dilute sampling is not required for any of the exhaust constituents, but is allowable for all. Heated sampling is not required for any of the constituents, but is allowable for HC and NO_X. The mass of gaseous emissions is determined from the sample concentration and total flow over the test period. As an option, the measurement of total fuel mass consumed over a cycle may be substituted for the exhaust measurement of CO_2. General requirements are as follows:

(1) This sampling system requires the use of a Positive Displacement Pump—Constant Volume Sampler (PDP–CVS) system with a heat exchanger, or a Critical Flow Venturi—Constant Volume Sampler (CFV–CVS) system with CFV sample probes and/or a heat exchanger or electronic flow compensation. Figure 2 in Appendix B of this subpart is a schematic drawing of the PDP–CVS system. Figure 3 in Appendix B of this subpart is a schematic drawing of the CFV–CVS system.

(2) The HC analytical system requires:

(i) Grab sampling (see § 90.420, and Figure 2 or Figure 3 in Appendix B of this subpart) and analytical capabilities (see § 90.423, and Figure 4 in Appendix B of this subpart), or

(ii) Continuously integrated measurement of diluted HC meeting the minimum requirements and technical specifications contained in paragraph (b)(2) of this section.

(iii) The dilute HC analytical system for nonroad small spark-ignition engines does not require a heated flame ionization detector (HFID).

(iv) If used, the HFID sample must be taken directly from the diluted exhaust stream through a heated probe and integrated continuously over the test cycle.

(v) The heated probe must be located in the sampling system far enough downstream of the mixing area to ensure a uniform sample distribution across the CVS duct at the sampling zone.

(3) The CO and CO_2 analytical system requires:

(i) Grab sampling (see § 90.420, and Figure 2 or Figure 3 in Appendix B of this subpart) and analytical capabilities (see § 90.423, and Figure 4 in Appendix B of this subpart), or

(ii) Continuously integrated measurement of diluted CO and CO_2 meeting the minimum requirements and technical specifications contained in paragraph (b)(4) of this section.

(4) The NO_X analytical system requires:

(i) Grab sampling (see § 90.420, and Figure 2 or Figure 3 in Appendix B of this subpart) and analytical capabilities (see § 90.423, and Figure 4 in Appendix B of this subpart), or

(ii) A continuously integrated measurement of diluted NO_X meeting the minimum requirements and technical specifications contained in paragraph (b)(4) of this section.

(5) Since various configurations can produce equivalent results, exact conformance with these drawings is not required. Additional components such as instruments, valves, solenoids,

pumps, and switches may be used to provide additional information and coordinate the functions of the component systems. Other components, such as snubbers, which are not needed to maintain accuracy on some systems, may be excluded if their exclusion is based upon good engineering judgment.

(6) Other sampling and/or analytical systems may be used if shown to yield equivalent results and if approved in advance by the Administrator.

(b) *Component description.* The components necessary for exhaust 0sampling must meet the following requirements:

(1) *Exhaust dilution system.* The PDP–CVS must conform to all of the requirements listed for the exhaust gas PDP–CVS in § 90.420 of this chapter. The CFV–CVS must conform to all of the requirements listed for the exhaust gas CFV–CVS in § 90.420 of this chapter. In addition, the CVS must conform to the following requirements:

(i) The flow capacity of the CVS must be sufficient to maintain the diluted exhaust stream in the dilution system at a temperature of 190° C or less at the sampling zone for hydrocarbon measurement and as required to prevent condensation at any point in the dilution system. Gaseous emission samples may be taken directly from this sampling point.

(ii) For the CFV–CVS, either a heat exchanger or electronic flow compensation is required (see Figure 3 in Appendix B of this subpart).

(iii) For the CFV–CVS when a heat exchanger is used, the gas mixture temperature, measured at a point immediately ahead of the critical flow venturi, must be within ±11° C of the average operating temperature observed during the test with the simultaneous requirement that condensation does not occur. The temperature measuring system (sensors and readout) must have an accuracy and precision of ±2° C. For systems utilizing a flow compensator to maintain proportional flow, the requirement for maintaining constant temperature is not necessary.

(2) *Continuous HC measurement system.* (i) The continuous HC sample system (as shown in Figure 2 or 3 in Appendix B of this subpart) uses an ''overflow'' zero and span system. In this type of system, excess zero or span gas spills out of the probe when zero and span checks of the analyzer are made.

(ii) No other analyzers may draw a sample from the continuous HC sample probe, line, or system, unless a common sample pump is used for all analyzers and the sample line system design reflects good engineering practice.

(iii) The overflow gas flow rates into the sample line must be at least 105 percent of the sample system flow rate.

(iv) The overflow gases must enter the sample line as close as practical to the outside surface of the CVS duct or dilution system.

(v) The continuous HC sampling system consists of a probe (which for a HFID analyzer must raise the sample to the specified temperature) and, where used, a sample transfer system (which for a HFID must maintain the specified temperature). The HFID continuous hydrocarbon sampling system (exclusive of the probe) must:

(A) Maintain a wall temperature of 190° C ±11° C as measured at every separately controlled heated component (that is, filters, heated line sections), using permanent thermocouples located at each of the separate components.

(B) Have a wall temperature of 190° C ±11° C over its entire length. The temperature of the system is demonstrated by profiling the thermal characteristics of the system where possible at initial installation and after any major maintenance performed on the system. The profiling is to be accomplished using the insertion thermocouple probing technique. The system temperature must be monitored continuously during testing at the locations and temperature described in § 90.421(b)(2).

(C) Maintain a gas temperature of 190° C ±11° C immediately before the heated filter and HFID. Determine these gas temperatures by a temperature sensor located immediately upstream of each component.

(vi) The continuous hydrocarbon sampling probe:

(A) Is defined as the first 25.4 to 76.2 cm of the continuous hydrocarbon sampling system.

(B) Has a 0.483 cm minimum inside diameter.

(C) Is installed in the dilution system at a point where the dilution air and exhaust are well mixed and provide a homogenous mixture.

(D) Is sufficiently distant (radially) from other probes and the system wall so as to be free from the influence of any wakes or eddies.

(E) For a continuous HFID sample probe, the probe must increases the gas stream temperature to 190° C ±11° C at the exit of the probe. Demonstrate the ability of the probe to accomplish this using the insertion thermocouple technique at initial installation and after any major maintenance. Demonstrate compliance with the temperature specification by continuously recording during each test the temperature of either the gas stream or the wall of the sample probe at its terminus.

(vii) The response time of the continuous measurement system must be taken into account when logging test data.

(3) *Sample Mixing.* (i) Configure the dilution system to ensure a well mixed, homogeneous sample prior to the sampling probe(s).

(ii) Make the temperature of the diluted exhaust stream inside the dilution system sufficient to prevent water condensation.

(iii) Direct the engine exhaust downstream at the point where it is introduced into the dilution system.

(4) *Continuously integrated* NO_X, CO, and CO_2 measurement systems.

(i) *Sample probe requirements:*

(A) The sample probe for continously intergrated NO_X, CO, and CO_2 must be in the same plane as the continuous HC probe, but sufficiently distant (radially) from other probes and the tunnel wall so as to be free from the influences of any wakes or eddies.

(B) The sample probe for continously intergrated NO_X, CO, and CO_2 must be heated and insulated over the entire length, to prevent water condensation, to a minimum temperature of 55° C. Sample gas temperature immediately before the first filter in the system must be at least 55° C.

(ii) Conform to the continuous NO_X, CO, or CO_2 sampling and analysis system to the specifications of part 86, subpart D of this chapter with the following exceptions and revisions:

(A) Heat the system components requiring heating only to prevent water condensation, the minimum component temperature is 55° C.

(B) Coordinate analysis system response time with CVS flow fluctuations and sampling time/test cycle offsets, if necessary.

(C) Use only analytical gases conforming to the specifications of § 90.312 of this subpart for calibration, zero and span checks.

(D) Use a calibration curve conforming to § 90.321 for CO and CO_2 and § 90.318 for NO_X for any range on a linear analyzer below 155 ppm.

(iii) Convert the chart deflections or voltage output of analyzers with non-linear calibration curves to concentration values by the calibration curve(s) specified in § 90.321 of this chapter before flow correction (if used) and subsequent integration takes place.

§ 90.422 Background sample.

(a) Background samples are produced by drawing a sample of the dilution air during the exhaust collection phase of each test cycle mode.

(1) An individual background sample may be produced and analyzed for each mode. Hence, a unique background value will be used for the emission calculations for each mode.

(2) Alternatively, a single background sample may be produced by drawing a sample during the collection phase of each test cycle mode. Hence, a single cumulative background value will be used for the emission calculations for each mode.

(b) For analysis of the individual sample described in paragraph (a)(1) of this section, a single value representing the average chart deflection over a 10-second stabilized period must be stored. All readings taken during the data logging period must be stable within ± one percent of full scale.

(c) Measure HC, CO, CO_2, and NO_X exhaust and background concentrations in the sample bag(s) with approximately the same flow rates and pressures used during calibration.

§ 90.423 Exhaust gas analytical system; CVS grab sample.

(a) *Schematic drawings.* Figure 4 in Appendix B of this subpart is a schematic drawing of the exhaust gas analytical systems used for analyzing CVS grab ''bag'' samples from spark-ignition engines. Since various configurations can produce accurate results, exact conformance with the drawing is not required. Additional components such as instruments, valves, solenoids, pumps and switches may be used to provide additional information and coordinate the functions of the component systems. Other components such as snubbers, which are not needed to maintain accuracy in some systems, may be excluded if their exclusion is based upon good engineering judgment.

(b) *Major component description.* The analytical system, Figure 4 in Appendix B of this subpart, consists of a flame ionization detector (FID) or a heated flame ionization detector (HFID) for the measurement of hydrocarbons, non-dispersive infrared analyzers (NDIR) for the measurement of carbon monoxide and carbon dioxide, and a chemiluminescence detector (CLD) (or heated CLD (HCLD)) for the measurement of oxides of nitrogen. The exhaust gas analytical system must conform to the following requirements:

(1) The CLD (or HCLD) requires that the nitrogen dioxide present in the sample be converted to nitric oxide before analysis. Other types of analyzers may be used if shown to yield equivalent results and if approved in advance by the Administrator.

(2) If CO instruments are used which are essentially free of CO_2 and water vapor interference, the use of the conditioning column may be deleted. (See § 90.317 and § 90.320.)

(3) A CO instrument is considered to be essentially free of CO_2 and water vapor interference if its response to a mixture of three percent CO_2 in N_2, which has been bubbled through water at room temperature, produces an equivalent CO response, as measured on the most sensitive CO range, which is less than one percent of full-scale CO concentration on ranges above 300 ppm full scale or less than three ppm on ranges below 300 ppm full scale. (See § 90.317.)

(c) *Alternate analytical systems.* Analysis systems meeting the specifications and requirements of this subpart for dilute sampling may be used upon approval of the Administrator.

(d) *Other analyzers and equipment.* Other types of analyzers and equipment may be used if shown to yield equivalent results and if approved in advance by the Administrator.

§ 90.424 Dilute sampling procedures—CVS calibration.

(a) The CVS is calibrated using an accurate flowmeter and restrictor valve.

(1) The flowmeter calibration must be traceable to the National Institute for Standards and Testing (NIST) and serves as the reference value (NIST ''true'' value) for the CVS calibration. (Note: In no case should an upstream screen or other restriction which can affect the flow be used ahead of the flowmeter unless calibrated throughout the flow range with such a device.)

(2) The CVS calibration procedures are designed for use of a ''metering venturi'' type flowmeter. Large radius or American Society of Mechanical Engineers (ASME) flow nozzles are considered equivalent if traceable to NIST measurements. Other measurement systems may be used if shown to be equivalent under the test conditions in this section and traceable to NIST measurements.

(3) Measurements of the various flowmeter parameters are recorded and related to flow through the CVS.

(4) Procedures using both PDP–CVS and CFV–CVS are outlined in the following paragraphs. Other procedures yielding equivalent results may be used if approved in advance by the Administrator.

(b) After the calibration curve has been obtained, verification of the entire system may be performed by injecting a known mass of gas into the system and comparing the mass indicated by the system to the true mass injected. An indicated error does not necessarily mean that the calibration is wrong, since other factors can influence the accuracy of the system (for example, analyzer calibration, leaks, or HC hangup). A verification procedure is found in paragraph (e) of this section.

(c) *PDP–CVS calibration.* (1) The following calibration procedure outlines the equipment, the test configuration, and the various parameters which must be measured to establish the flow rate of the CVS pump.

(i) All the parameters related to the pump are simultaneously measured with the parameters related to a flowmeter which is connected in series with the pump.

(ii) The calculated flow rate, in cm^3/s, (at pump inlet absolute pressure and temperature) can then be plotted versus a correlation function which is the value of a specific combination of pump parameters.

(iii) The linear equation which relates the pump flow and the correlation function is then determined.

(iv) In the event that a CVS has a multiple speed drive, a calibration for each range used must be performed.

(2) This calibration procedure is based on the measurement of the absolute values of the pump and flowmeter parameters that relate the flow rate at each point. Two conditions must be maintained to assure the accuracy and integrity of the calibration curve:

(i) The temperature stability must be maintained during calibration. (Flowmeters are sensitive to inlet temperature oscillations; this can cause the data points to be scattered. Gradual changes in temperature are acceptable as long as they occur over a period of several minutes.)

(ii) All connections and ducting between the flowmeter and the CVS pump must be absolutely void of leakage.

(3) During an exhaust emission test the measurement of these same pump parameters enables the user to calculate the flow rate from the calibration equation.

(4) Connect a system as shown in Figure 5 in Appendix B of this subpart. Although particular types of equipment are shown, other configurations that yield equivalent results may be used if approved in advance by the Administrator. For the system indicated, the following measurements and accuracies are required:

CALIBRATION DATA MEASUREMENTS

Parameter	Symbol	Units	Sensor-readout tolerances
Barometric pressure (corrected)	P_B	kPa	±.340 kPa.
Ambient temperature	T_A	° C	±.28° C.
Air temperature into metering venturi	ETI	° C	±1.11° C.
Pressure drop between the inlet and throat of metering venturi	EDP	kPa	±0.012 kPa.
Air flow	Q_S	m³/min.	±0.5 percent of NIST value.
Air temperature at CVS pump inlet	PTI	° C	±1.11° C.
Pressure depression at CVS pump inlet	PPI	kPa	±0.055 kPa.
Pressure head at CVS pump outlet	PPO	kPa	±0.055 kPa.
Air temperature at CVS pump outlet (optional)	PTO	° C	±1.11° C.
Pump revolutions during test period	N	Revs	±1 Rev.
Elapsed time for test period	t	s	±0.5 s.

(5) After the system has been connected as shown in Figure 5 in Appendix B of this subpart, set the variable restrictor in the wide open position and run the CVS pump for 20 minutes. Record the calibration data.

(6) Reset the restrictor valve to a more restricted condition in an increment of pump inlet depression that will yield a minimum of six data points for the total calibration. Allow the system to stabilize for three minutes and repeat the data acquisition.

(7) *Data analysis:*

(i) The air flow rate, Q_s, at each test point is calculated in standard cubic feet per minute 20° C, 101.3 kPa from the flowmeter data using the manufacturer's prescribed method.

(ii) The air flow rate is then converted to pump flow, V_o, in cubic meter per revolution at absolute pump inlet temperature and pressure:

$$V_o = \frac{Q_s}{n} \times \frac{T_p}{293} \times \frac{101.3\,\text{kPa}}{P_p}$$

Where:

V_o=Pump flow, m³/rev at T_p, P_p.

Q_s=Meter air flow rate in standard cubic meters per minute, standard conditions are 20° C, 101.3 kPa.

n=Pump speed in revolutions per minute.

T_p=Absolute pump inlet temperature in Kelvin, =PTI+273 [°K]

P_p=Absolute pump inlet pressure, kPa. $=P_B - PPI$

Where:

P_B=barometric pressure, kPa

PPI=Pump inlet depression, kPa.

(iii) The correlation function at each test point is then calculated from the calibration data:

$$X_o = \frac{1}{n}\sqrt{\left(\frac{\Delta p}{P_e}\right)}$$

Where:

X_o=correlation function.

Δp=The pressure differential from pump inlet to pump outlet [kPa] $\Delta p = P_e - P_p$.

Where:

P_e=Absolute pump outlet pressure [kPa], $P_e = P_B + PPI$

(iv) A linear least squares fit is performed to generate the calibration equation which has the form:

$$V_0 = D_o - M(X_o)$$

Where:

D_o and M are the intercept and slope constants, respectively, describing the regression line.

(8) A CVS system that has multiple speeds should be calibrated on each speed used. The calibration curves generated for the ranges will be approximately parallel and the intercept values, D_o, will increase as the pump flow range decreases.

(9) If the calibration has been performed carefully, the calculated values from the equation will be within ± 0.50 percent of the measured value of V_o. Values of M will vary from one pump to another, but values of D_o for pumps of the same make, model, and range should agree within ± three percent of each other. Calibrations should be performed at pump start-up and after major maintenance to assure the stability of the pump slip rate. Analysis of mass injection data will also reflect pump slip stability.

(d) *CFV–CVS calibration.* (1) Calibration of the CFV is based upon the flow equation for a critical venturi. Gas flow is a function of inlet pressure and temperature:

$$Q_s = \frac{K_v P}{\sqrt{T}}$$

Where:

Q_s=flow rate [m³/min.]

K_v=calibration coefficient

P=absolute pressure [kPa]

T=absolute temperature [°K]

The calibration procedure described in paragraph (d)(3) of this section establishes the value of the calibration coefficient at measured values of pressure, temperature, and air flow.

(2) The manufacturer's recommended procedure must be followed for calibrating electronic portions of the CFV.

(3) Measurements necessary for flow calibration are as follows:

CALIBRATION DATA MEASUREMENTS

Parameter	Symbol	Units	Tolerances
Barometric Pressure (corrected)	P_B	kPa	±.34 kPa
Air temperature, into flowmeter	*ETI*	° C	±.28° C
Pressure drop between the inlet and throat of metering venturi	*EDP*	in. H_2O	±.05 in H_2O
Air flow	Q_S	m³/min	±.5 percent of NIST value
CFV inlet depression	*PPI*	(kPa)	±.055 kPa
Temperature at venturi inlet	T_V	° C	±2.22° C

(4) Set up equipment as shown in Figure 6 in Appendix B of this subpart and eliminate leaks. (Leaks between the flow measuring devices and the critical flow venturi will seriously affect the accuracy of the calibration.)

(5) Set the variable flow restrictor to the open position, start the blower, and allow the system to stabilize. Record data from all instruments.

(6) Vary the flow restrictor and make at least eight readings across the critical flow range of the venturi.

(7) *Data analysis.* The data recorded during the calibration are to be used in the following calculations:

(i) Calculate the air flow rate (designated as Q_s) at each test point in standard cubic feet per minute from the flow meter data using the manufacturer's prescribed method.

(ii) Calculate values of the calibration coefficient for each test point:

Where:

Q_s=Flow rate in standard cubic meters per minute, at

$$K_v = \frac{Q_s \sqrt{T_v}}{P_v}$$

the standard conditions of 20° C, 101.3 kPa.

T_v=Temperature at venturi inlet, °K.

P_v=Pressure at venturi inlet, kPa=$P_B - P_{PI}$

Where:

P_{PI}=Venturi inlet pressure depression, kPa.

(iii) Plot K_v as a function of venturi inlet pressure. For choked flow, K_v will have a relatively constant value. As pressure decreases (vacuum increases), the venturi becomes unchoked and K_v decreases. (See Figure 7 in Appendix B to Subpart D.)

(iv) For a minimum of eight points in the critical region, calculate an average K_v and the standard deviation.

(v) If the standard deviation exceeds 0.3 percent of the average K_v , take corrective action.

(e) *CVS system verification.* The following ''gravimetric'' technique may be used to verify that the CVS and analytical instruments can accurately measure a mass of gas that has been injected into the system. (Verification can also be accomplished by constant flow metering using critical flow orifice devices.)

(1) Obtain a small cylinder that has been charged with 99.5 percent or greater propane or carbon monoxide gas (CAUTION—carbon monoxide is poisonous).

(2) Determine a reference cylinder weight to the nearest 0.01 grams.

(3) Operate the CVS in the normal manner and release a quantity of pure propane into the system during the sampling period (approximately five minutes).

(4) The calculations are performed in the normal way except in the case of propane. The density of propane (0.6109 kg/m^3/carbon atom) is used in place of the density of exhaust hydrocarbons.

(5) The gravimetric mass is subtracted from the CVS measured mass and then divided by the gravimetric mass to determine the percent accuracy of the system.

(6) Good engineering practice requires that the cause for any discrepancy greater than ± two percent must be found and corrected.

§ 90.425 CVS calibration frequency.

Calibrate the CVS positive displacement pump or critical flow venturi following initial installation, major maintenance, or as necessary when indicated by the CVS system verification (described in § 90.424(e)).

§ 90.426 Dilute emission sampling calculations—gasoline fueled engines.

(a) The final reported emission test results must be computed by use of the following formula:

$$A_{WM} = \frac{\sum_{i}^{n}\left(W_i \cdot WF_i\right)}{\sum_{i}^{n}\left(P_i \cdot WF_i\right)} \cdot K_{H_i}$$

Where:

A_{WM}=Final weighted brake-specific mass emission rate for an emission (HC, CO, CO_2, or NO_X) [g/kW-hr]

W_i=Average mass flow rate of an emission (HC, CO, CO_2, NO_X) from a test engine during mode i [g/hr]

WF_i=Weighting factor for each mode i as defined in § 90.410(a).

P_i=Gross average power generated during mode i [kW], calculated from the following equation,

$$P_i = \frac{2\pi}{60{,}000} \times \text{speed} \times \text{torque}$$

Where:

speed=average engine speed measured during mode i [rev./minute]

torque=average engine torque measured during mode i [N-m]

K_{Hi}=NO_X humidity correction factor for mode i. This correction factor only affects calculations for NO_X and is equal to one for all other emissions. K_{Hi} is also equal to 1 for all two-stroke engines.

(b) The mass flow rate, W_i in g/hr, of an emission for mode i is determined from the following equations:

$$W_i = Q_i \cdot \text{Density} \cdot \left(\frac{C_{Di} - C_{Bi}}{10^6} \cdot \left(1 - \frac{1}{DF_i}\right)\right)$$

Where:

Q_i=Volumetric flow rate of the dilute exhaust through the CVS at standard conditions [m^3/hr at STP].

Density=Density of a specific emission ($Density_{HC}$, $Density_{CO}$, $Density_{CO2}$, $Density_{NOx}$) [g/m^3].

DF_i=Dilution factor of the dilute exhaust during mode i.

C_{Di}=Concentration of the emission (HC, CO, NO_X) in dilute exhaust extracted from the CVS during mode i [ppm].

C_{Bi}=Concentration of the emission (HC, CO, NO_X) in the background sample during mode i [ppm].

STP=Standard temperature and pressure. All volumetric calculations made for the equations in this section are to be corrected to a standard temperature of 20° C and 101.3 kPa.

(c) Densities for emissions that are to be measured for this test procedure are:

$Density_{HC}$=576.8 g/m^3
$Density_{NOX}$=1912 g/m^3
$Density_{CO}$=1164 g/m^3
$Density_{CO2}$=1829 g/m^3

(1) The value of $Density_{HC}$ above is calculated based on the assumption that the fuel used has a carbon to hydrogen ratio of 1:1.85. For other fuels $Density_{HC}$ can be calculated from the following formula:

$$\text{Density}_{HC} = \frac{M_{HC}}{R_{STP}}$$

Where:

M_{HC}=The molecular weight of the hydrocarbon molecule divided by the number of carbon atoms in the molecule [g/mole]

R_{STP}=Ideal gas constant for a gas at STP=0.024065 [m^3-mole].

(2) The idealized molecular weight of the exhaust hydrocarbons, i.e., the molecular weight of the hydrocarbon molecule divided by the number of carbon atoms in the molecule, M_{HC}, can be calculated from the following formula:

$$M_{HC} = M_C + \alpha M_H + \beta M_O$$

Where:

M_C=Molecular weight of carbon=12.01 [g/mole]

M_H=Molecular weight of hydrogen=1.008 [g/mole]

M_O=Molecular weight of oxygen=16.00 [g/mole]

α=Hydrogen to carbon ratio of the test fuel

β=Oxygen to carbon ratio of the test fuel

(3) The value of $Density_{NOX}$ above assumes that NO_X is entirely in the form of NO_2

(d) The dilution factor, DF, is the ratio of the volumetric flow rate of the background air to that of the

$$DF = \frac{13.4}{C_{D_{HC}} + C_{D_{CO}} + C_{D_{CO_2}}}$$

raw engine exhaust. The following formula is used to determine DF:

Where:

$C_{D\ HC}$=Concentration of HC in the dilute sample [ppm]

$C_{D\ CO}$=Concentration of CO in the dilute sample [ppm]

$C_{D\ CO2}$=Concentration of CO_2 in the dilute sample [ppm]

(e) The humidity correction factor K_H is an adjustment made to the measured NO_X. This corrects for the sensitivity that a spark-ignition engine has to the humidity of its combustion air. The following formula is used to determine K_H for NO_X calculations:

$$K_H = \frac{1}{1 - 0.0329(H - 10.71)}$$

Where:

H=Absolute humidity of the engine intake air [grams of water per kilogram of dry air].

(f) Calculate the absolute humidity of the engine intake air H using the following formula:

$$H = \frac{6.211 P_{dew}}{P_b - \left(\frac{P_{dew}}{100}\right)}$$

Where:

P_{dew}=Saturated vapor pressure at the dew point temperature [kPa]

P_b=Barometric pressure [kPa].

(g) Compute the final reported brake-specific fuel consumption (BSFC) by use of the following formula:

$$BSFC = \frac{\sum_{i}^{n}\left(G_{FUEL_i} \times WF_i\right)}{\sum_{i}^{n}\left(P_i \times WF_i\right)}$$

Where:

BSFC=brake-specific fuel consumption in grams of fuel per brake kilowatt-hour [g/kW-hr].

$G_{FUEL\ i}$=mass flow rate of engine fuel during mode i [g/hr]

WF_i=Weighting factors for each mode according to § 90.410(a)

P_i=Gross average power generated during mode i [kW], calculated from the following equation,

$$P_i = \frac{2\pi}{60{,}000} \times speed \times torque$$

Where:

speed=average engine speed measured during mode i [rev./minute]

torque=average engine torque measured during mode i [N–m]

(h) The fuel mass flow rate, F_i, can be either measured or calculated using the following formula

$$F_i = \frac{M_{FUEL}}{T}$$

Where:

M_{FUEL}=Mass of fuel consumed by the engine during the mode [g]

T=Duration of the sampling period [hr]

(i) The mass of fuel consumed during the mode sampling period, M_{FUEL}, can be calculated from the following equation:

$$M_{FUEL} = \frac{G_s}{R_2 \times 273.15}$$

Where:

G_s=Mass of carbon measured during the mode sampling period [g]

R_2=The fuel carbon weight fraction, which is the mass of carbon in fuel per mass of fuel [g/g]

The grams of carbon measured during the mode, G_s, can be calculated from the following equation:

$$G_s = \frac{12.011 \times HC_{mass}}{12.011 + 1.008\alpha} + 0.429CO_{mass} + 0.273CO_{2mass}$$

Where:

HC_{mass}=mass of hydrocarbon emissions for the mode sampling period [grams]

CO_{2mass}=mass of carbon monoxide emissions for the mode sampling period [grams]

CO_{2mass}=mass of carbon dioxide emissions for the mode sampling period [grams]

α=The atomic hydrogen to carbon ratio of the fuel

§ 90.427 Catalyst thermal stress resistance evaluation.

(a) The purpose of the evaluation procedure specified in this section is to determine the effect of thermal stress on catalyst conversion efficiency. The thermal stress is imposed on the test catalyst by exposing it to quiescent heated air in an oven. The evaluation of the effect of such stress on catalyst performance is based on the resultant degradation of the efficiency with which the conversions of specific pollutants are promoted. The application of this evaluation procedure involves the several steps that are described in the following paragraphs.

(b) *Determination of initial conversion efficiency.* (1) A synthetic exhaust gas mixture having the composition specified in § 90.329 is heated to a temperature of 450° C ± 5° C and passed through the new test catalyst or, optionally, a test catalyst that has been exposed to temperatures less than or equal to 500° C for less than or equal to two hours, under flow conditions that are representative of anticipated in-use conditions.

(2) The concentration of each pollutant of interest, that is, hydrocarbons, carbon monoxide, or oxides of nitrogen, in the effluent of the catalyst is determined by means of the instrumentation that is specified for exhaust gas analysis in subpart D of this part.

(3) The conversion efficiency for each pollutant is determined by:

(i) Subtracting the effluent concentration from the initial concentration;

(ii) Dividing this result by the initial concentration; and

(iii) Multiplying this result by 100 percent.

(c) *Imposition of thermal stress.* (1) The catalyst is placed in an oven that has been pre-heated to 1000° C and the temperature of the air in the oven is maintained at 1000° C ± 10° C for six hours.

(2) The catalyst is removed from the oven and allowed to cool to room temperature.

(d) *Determination of final conversion efficiency.* The steps listed in paragraph (b) of this section are repeated.

(e) *Determination of conversion efficiency degradation.*

(1) The final conversion efficiency determined in paragraph (c) of this section is subtracted from the initial

conversion efficiency determined in paragraph (b) of this section.

(2) This result is divided by the initial conversion efficiency.

(3) This result is multiplied by 100 percent.

(f) *Determination of compliance with degradation limit.* The percent degradation determined in paragraph (e) of this section must not be greater than 20 percent.

Appendix A to Subpart E of Part 90—Tables

TABLE 1.—PARAMETERS TO BE MEASURED OR CALCULATED AND RECORDED

Parameter	Units
Airflow rate (dry), if applicable	g/h
Fuel flow rate	g/h
Engine Speed	rpm
Engine Torque Output	N m
Power Output	kW
Air inlet temperature	° C
Air humidity	mg/kg
Coolant temperature (liquid cooled)	° C
Exhaust mixing chamber surface temperature, if applicable	° C
Exhaust sample line temperature, if applicable	° C
Total Accumulated hours of Engine Operation	h
Barometric Pressure	kPa

TABLE 2.—TEST CYCLES FOR CLASS I–V ENGINES

Mode Speed	1	2	3	4	5	6	7	8	9	10	11
	Rated Speed					Intermediate Speed					Idle
Mode Points—A Cycle	.....	.....	.....	.....	.....	1	2	3	4	5	6
Load Percent—A Cycle	.....	.....	.....	.....	.....	100	75	50	25	10	0
Weighting	.....	.....	.....	.....	.....	9%	20%	29%	30%	7%	5%
Mode Points—B Cycle	1	2	3	4	5	.....	.....	.....	.....	.....	6
Load Percent—B Cycle	100	75	50	25	10	.....	.....	.....	.....	.....	0
Weighting	9%	20%	29%	30%	7%	.....	.....	.....	.....	.....	5%
Mode Points—C Cycle	1	.....	.....	.....	.....	.....	.....	.....	.....	.....	2
Load Percent—C Cycle	100	.....	.....	.....	.....	.....	.....	.....	.....	.....	0
Weighting	90%	.....	.....	.....	.....	.....	.....	.....	.....	.....	10%

Appendix B to Subpart E—Figures

BILLING CODE 6560–50–P

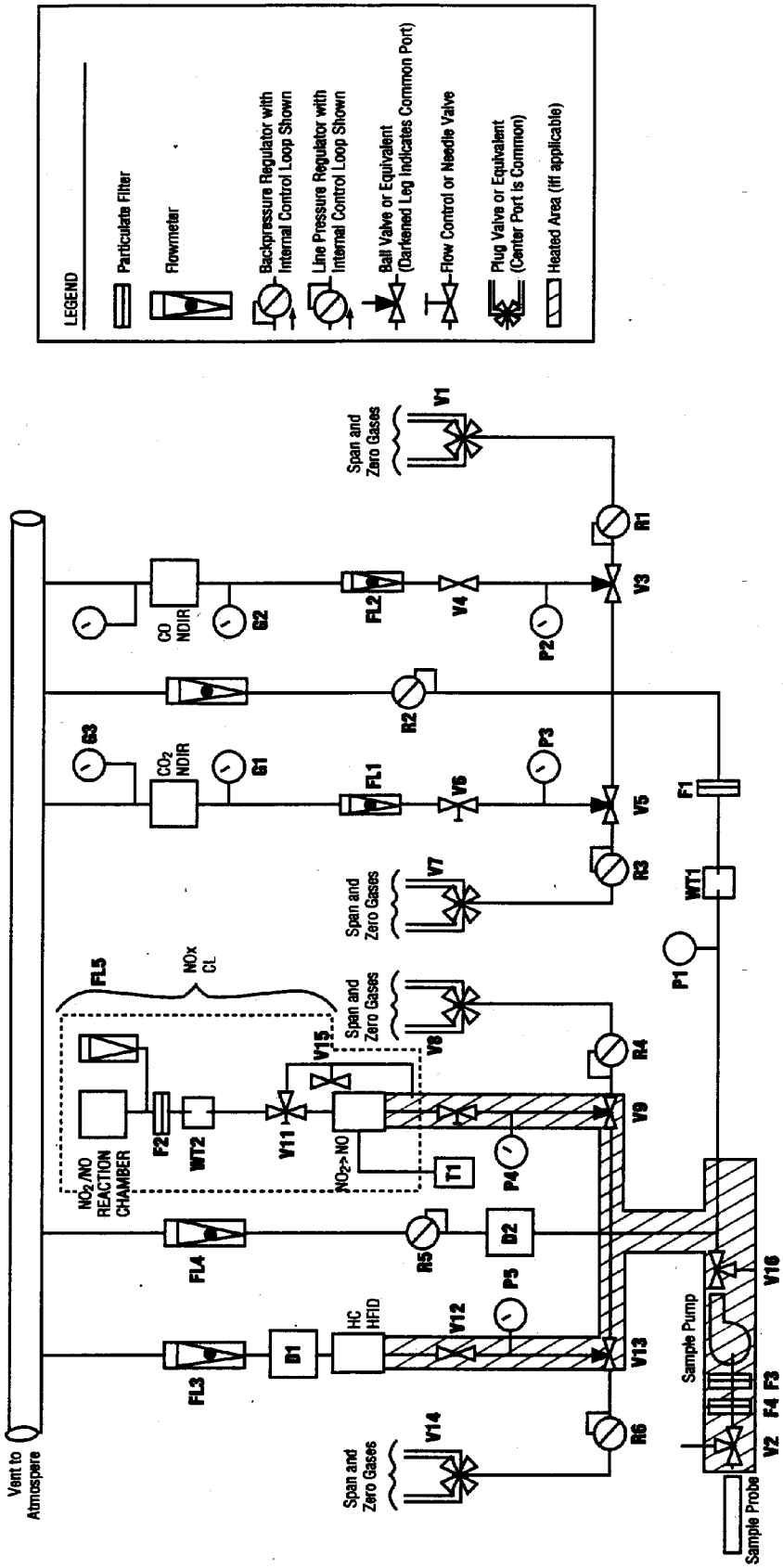

Figure 1. — Exhaust Gas Sampling and Analytical Train, Continuous Sampling

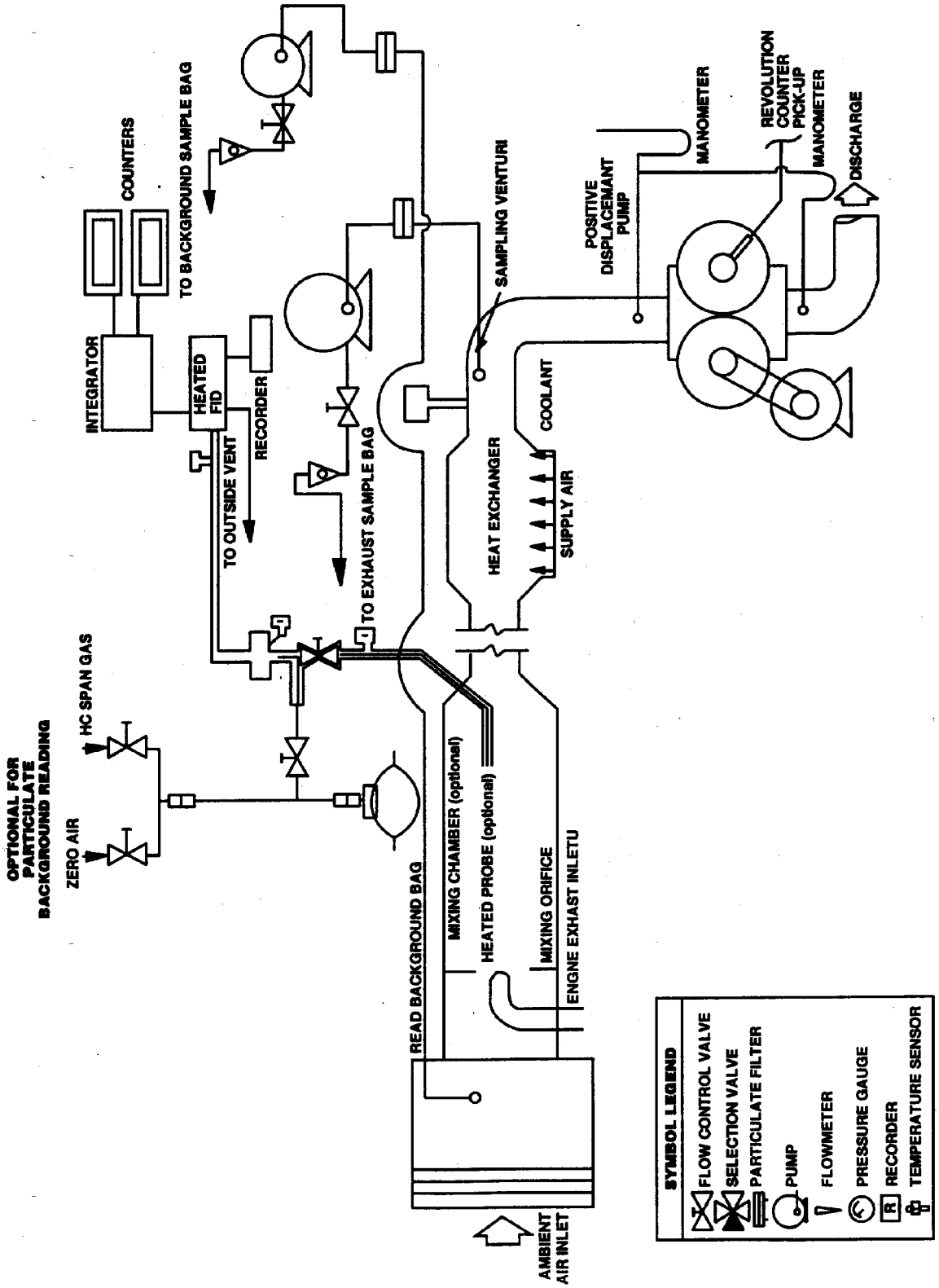

Figure 2 — Gaseous Emissions Sampling System (PDP-CVS) Showing both grab bag sampling and continous sampling

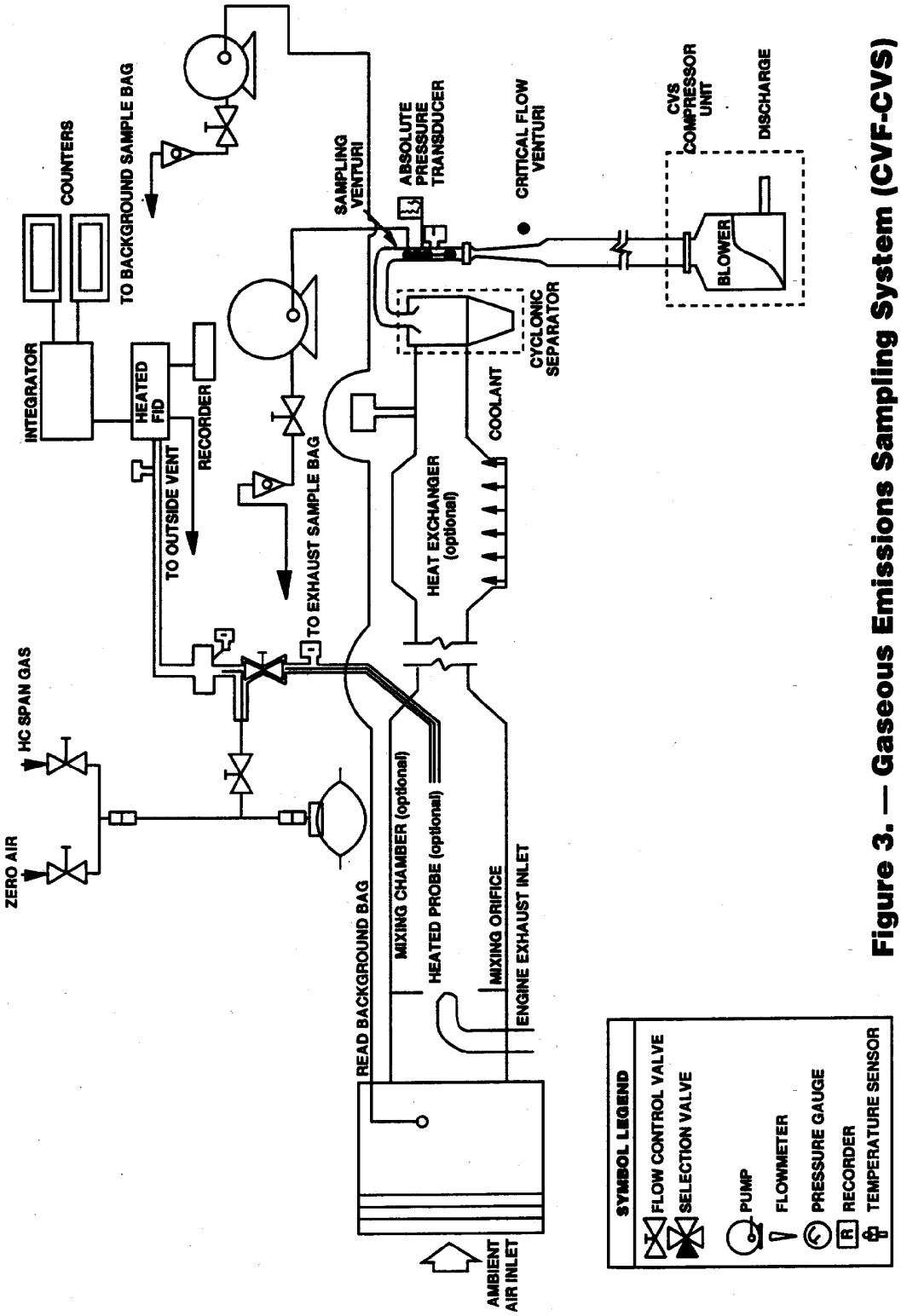

Figure 3. — Gaseous Emissions Sampling System (CVF-CVS)

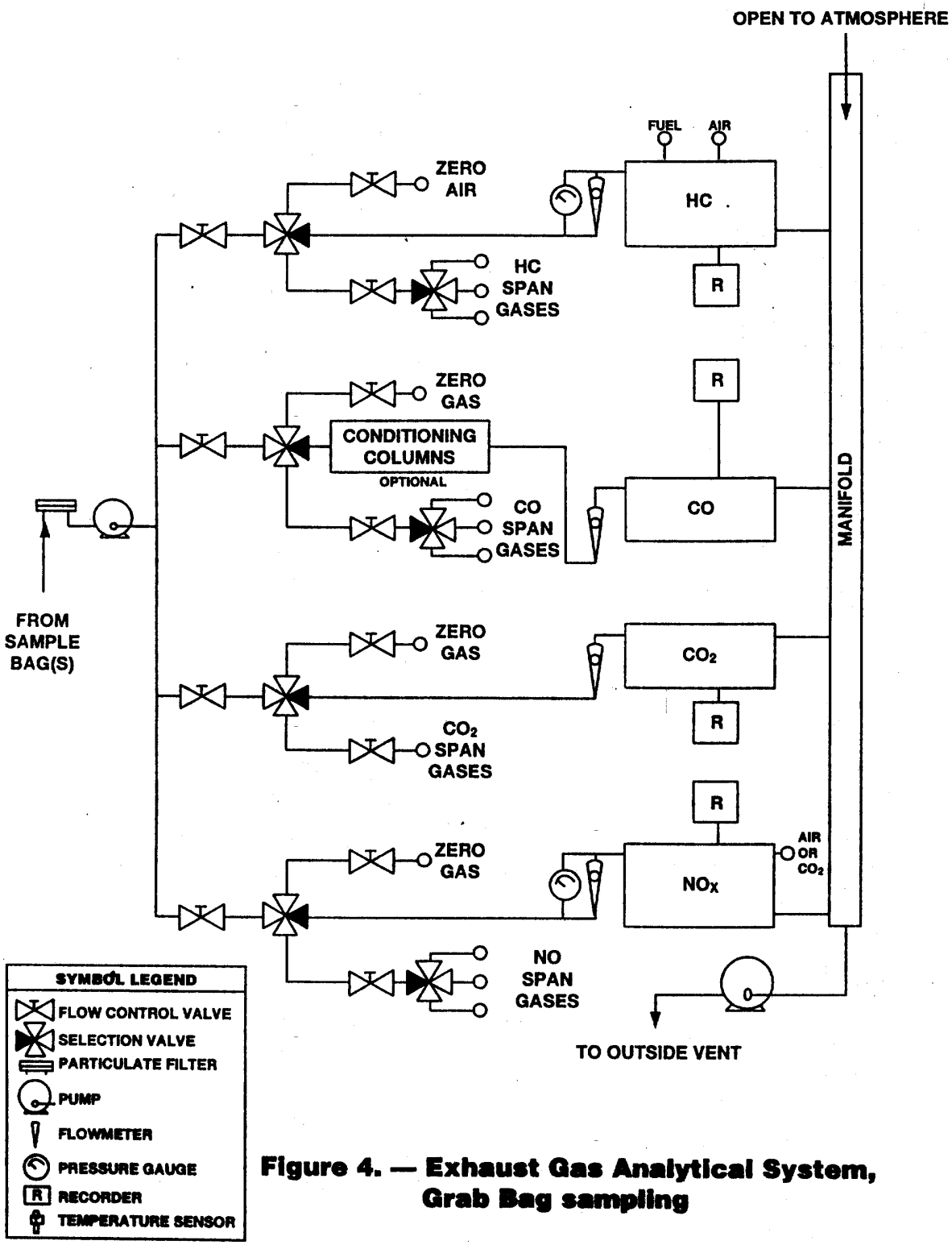

Figure 4. — Exhaust Gas Analytical System, Grab Bag sampling

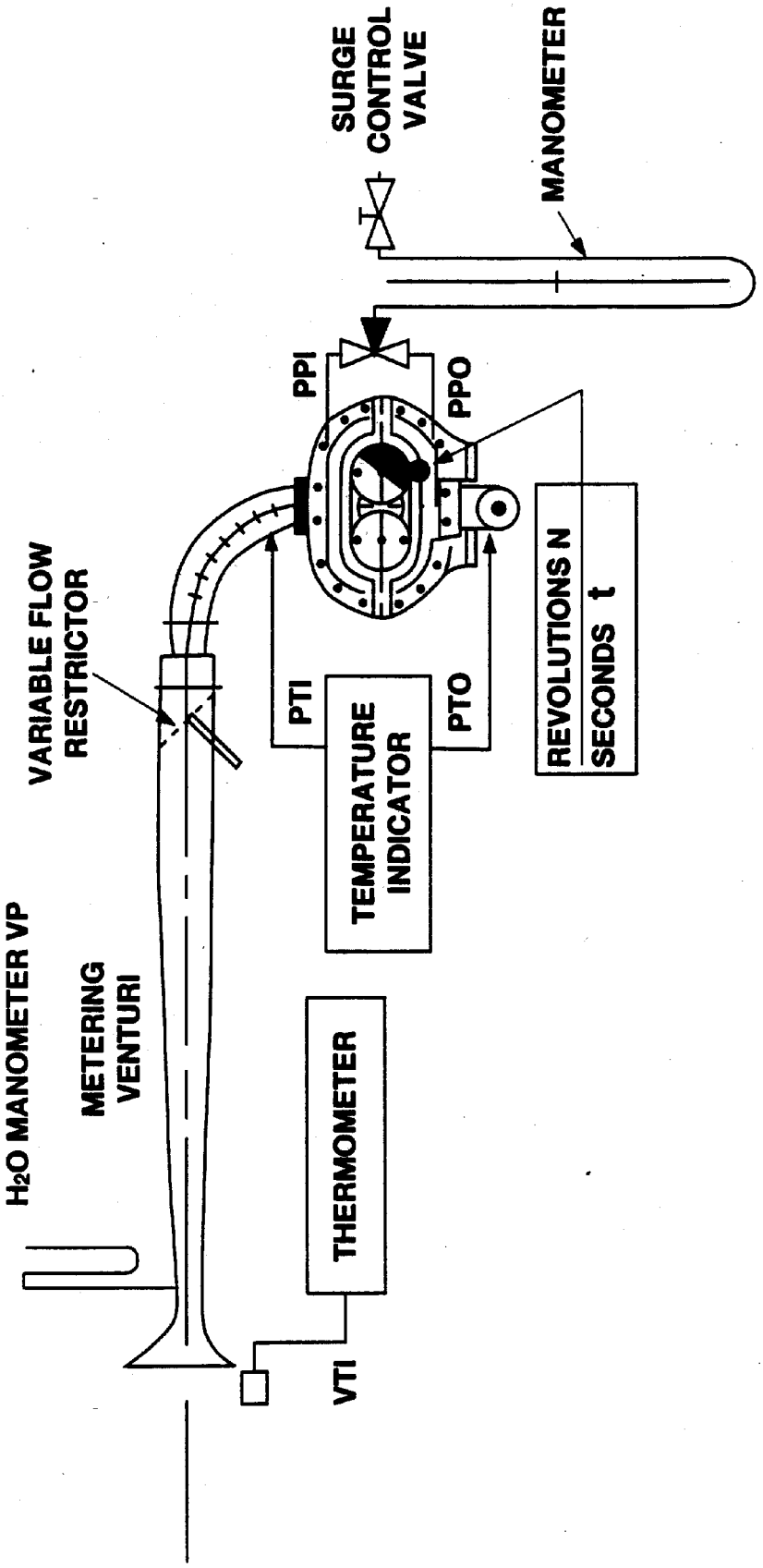

Figure 5. — PDP-CVS Calibration Configuration

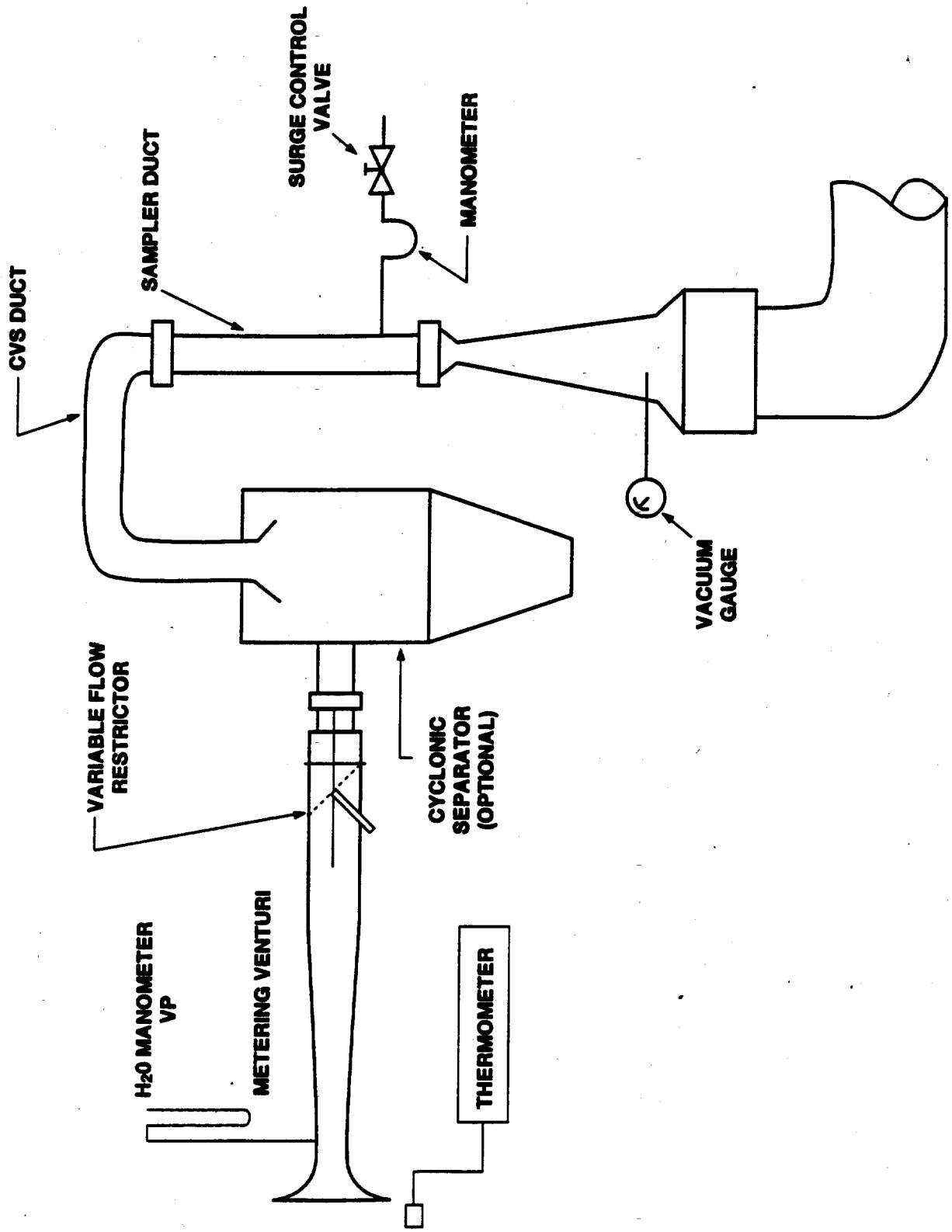

Figure 6. — CFV-CVS Calibration Configuration

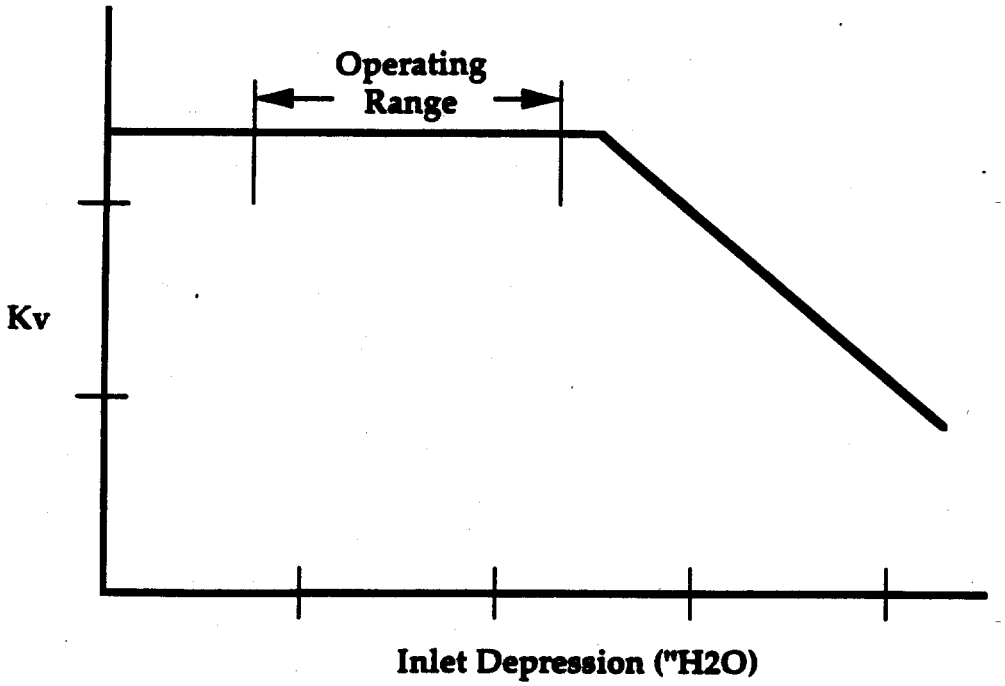

Figure 7.—Sonic Flow Choking

BILLING CODE 6560–50–C

Subpart F—Selective Enforcement Auditing

§ 90.501 Applicability.

The requirements of subpart F shall be applicable to all nonroad engines and vehicles subject to the provisions of subpart A of part 90.

§ 90.502 Definitions.

The definitions in subpart A of this part apply to this subpart. The following definitions shall also apply to this subpart.

Acceptable quality level (AQL) means the maximum percentage of failing engines that can be considered a satisfactory process average for sampling inspections.

Configuration means any subclassification of an engine family which can be described on the basis of gross power, emission control system, governed speed, fuel system, engine calibration, and other parameters as designated by the Administrator.

Inspection criteria means the pass and fail numbers associated with a particular sampling plan.

Test engine means an engine in a test sample.

Test sample means the collection of engines selected from the population of an engine family for emission testing.

§ 90.503 Test orders.

(a) The Administrator shall require any testing under this subpart by means of a test order addressed to the manufacturer.

(b) The test order will be signed by the Assistant Administrator for Air and Radiation or his or her designee. The test order will be delivered in person by an EPA enforcement officer or EPA authorized representative to a company representative or sent by registered mail, return receipt requested, to the manufacturer's representative who signed the application for certification submitted by the manufacturer, pursuant to the requirements of the applicable section of subpart B of this part. Upon receipt of a test order, the manufacturer shall comply with all of the provisions of this subpart and instructions in the test order.

(c) *Information included in test order.* (1) The test order will specify the engine family to be selected for testing, the manufacturer's engine assembly plant or associated storage facility or port facility (for imported engines) from which the engines must be selected, the time and location at which engines must be selected, and the procedure by which engines of the specified family must be selected. The test order may specify the configuration to be audited and/or the number of engines to be selected per day. Engine manufacturers will be required to select a minimum of four engines per day unless an alternate selection procedure is approved pursuant to § 90.507(a), or unless total production of the specified configuration is less than four engines per day. If total production of the specified configuration is less than four engines per day, the manufacturer will select the actual number of engines produced per day.

(2) The test order may include alternate families to be selected for testing at the Administrator's discretion in the event that engines of the specified family are not available for testing because those engines are not being manufactured during the specified time, or are not being stored at the specified assembly plant, associated storage facilities or port of entry.

(3) If the specified family is not being manufactured at a rate of at least two engines per day in the case of manufacturers specified in § 90.508(g)(1), or one engine per day in the case of manufacturers specified in § 90.508(g)(2), over the expected duration of the audit, the Assistant Administrator or his or her designated representative may select engines of the alternate family for testing.

(4) In addition, the test order may include other directions or information essential to the administration of the required testing.

(d) A manufacturer may submit a list of engine families and the corresponding assembly plants, associated storage facilities, or (in the case of imported engines) port facilities from which the manufacturer prefers to have engines selected for testing in response to a test order. In order that a manufacturer's preferred location be considered for inclusion in a test order for a particular engine family, the list must be submitted prior to issuance of the test order. Notwithstanding the fact that a manufacturer has submitted the list, the Administrator may order selection at other than a preferred location.

(e) Upon receipt of a test order, a manufacturer shall proceed in accordance with the provisions of this subpart.

(f)(1) During a given model year, the Administrator shall not issue to a manufacturer more Selective Enforcement Auditing (SEA) test orders than an annual limit determined by the following:

(i) for manufacturers with a projected annual production of less than 100,000 engines bound for the United States market for that model year, the number is two;

(ii) for manufacturers with a projected annual production of 100,000 or more engines bound for the United States market for that model year, by dividing the manufacturer's total number of certified engine families by five and rounding to the nearest whole number, unless the number of engine families is less than eight, in which case the number is two.

(2) If a manufacturer submits to EPA in writing prior to or during the model year a reliable sales projection update or adds engine families or deletes engine families from its production, that information will be used for recalculating the manufacturer's annual limit of SEA test orders.

(3) Any SEA test order for which the family fails under § 90.510 or for which testing is not completed will not be counted against the annual limit.

(4) When the annual limit has been met, the Administrator may issue additional test orders to test those families for which evidence exists indicating noncompliance. An SEA test order issued on this basis will include a statement as to the reason for its issuance.

§ 90.504 Testing by the Administrator.

(a) The Administrator may require by test order under § 90.503 that engines of a specified family be selected in a manner consistent with the requirements of § 90.507 and submitted to the Administrator at the place designated for the purpose of conducting emission tests. These tests will be conducted in accordance with § 90.508 to determine whether engines manufactured by the manufacturer conform with the regulations with respect to which the certificate of conformity was issued.

(b) *Designating official data.* (1) Whenever the Administrator conducts a test on a test engine or the Administrator and manufacturer each conduct a test on the same test engine, the results of the Administrator's test will comprise the official data for that engine.

(2) Whenever the manufacturer conducts all tests on a test engine, the manufacturer's test data will be accepted as the official data, provided that if the Administrator makes a determination based on testing conducted under paragraph (a) of this section that there is a substantial lack of agreement between the manufacturer's test results and the Administrator's test results, no manufacturer's test data from the manufacturer's test facility will be accepted for purposes of this subpart.

(c) If testing conducted under paragraph (a) of this section is unacceptable under § 90.503, the Administrator shall:

(1) Notify the manufacturer in writing of the Administrator's determination that the test facility is inappropriate for conducting the tests required by this subpart and the reasons therefor; and

(2) Reinstate any manufacturer's data upon a showing by the manufacturer that the data acquired under paragraph (a) of this section was erroneous and the manufacturer's data was correct.

(d) The manufacturer may request in writing that the Administrator reconsider his or her determination in paragraph (b)(2) of this section based on data or information which indicates that changes have been made to the test facility and these changes have resolved the reasons for disqualification.

§ 90.505 Maintenance of records; submittal of information.

(a) The manufacturer of any new nonroad engine subject to any of the provisions of this subpart shall establish, maintain, and retain the following adequately organized and indexed records:

(1) *General records.* A description of all equipment used to test engines, as specified in subpart D of this part, in accordance with § 90.508 pursuant to a test order issued under this subpart.

(2) *Individual records.* These records pertain to each audit conducted pursuant to this subpart and shall include:

(i) The date, time, and location of each test;

(ii) The number of hours of service accumulated on the engine when the test began and ended;

(iii) The names of all supervisory personnel involved in the conduct of the audit;

(iv) A record and description of any repairs performed prior to and/or subsequent to approval by the Administrator, giving the date, associated time, justification, name(s) of the authorizing personnel, and names of all supervisory personnel responsible for the conduct of the repair;

(v) The date the engine was shipped from the assembly plant, associated storage facility or port facility and date the engine was received at the testing facility;

(vi) A complete record of all emission tests performed pursuant to this subpart (except tests performed directly by EPA), including all individual worksheets and/or other documentation relating to each test, or exact copies thereof, to be in accordance with the record requirements specified in §§ 90.405, 90.406, 90.418, and/or 90.425 as applicable.

(vii) A brief description of any significant audit events commencing with the test engine selection process, but not described under paragraph (a)(2) of this section, including such extraordinary events as engine damage during shipment.

(3) The manufacturer shall record test equipment description, pursuant to paragraph (a)(1) of this section, for each test cell that can be used to perform emission testing under this subpart.

(b) The manufacturer shall retain all records required to be maintained under this subpart for a period of one year after completion of all testing in response to a test order. Records may be retained as hard copy or reduced to microfilm, floppy disc, and so forth, depending upon the manufacturer's record retention procedure, provided that in every case all the information contained in the hard copy is retained.

(c) The manufacturer shall, upon request by the Administrator, submit the following information with regard to engine production:

(1) Projected U.S. sales data for each engine configuration within each engine family for which certification is requested;

(2) Number of engines, by configuration and assembly plant, scheduled for production for the time period designated in the request;

(3) Number of engines, by configuration and by assembly plant, storage facility or port facility, scheduled to be stored at facilities for the time period designated in the request; and

(4) Number of engines, by configuration and assembly plant, produced during the time period designated in the request that are complete for introduction into commerce.

(d) Nothing in this section limits the Administrator's discretion in requiring the manufacturer to retain additional records or submit information not specifically required by this section.

(e) The manufacturer shall address all reports, submissions, notifications, and requests for approvals made under this subpart to: Director, Manufacturers Operations Division, U.S. Environmental Protection Agency, 6405–J, 401 M Street S.W., Washington, D.C. 20460.

§ 90.506 Right of entry and access.

(a) To allow the Administrator to determine whether a manufacturer is complying with the provisions of this subpart, a test order is issued which authorizes EPA enforcement officers or their authorized representatives upon presentation of credentials to enter during operating hours any of the following places:

(1) Any facility where any engine to be introduced into commerce, including ports of entry, or any emission-related component is manufactured, assembled, or stored;

(2) Any facility where any tests conducted pursuant to a test order or any procedures or activities connected with these tests are or were performed;

(3) Any facility where any engine which is being tested, was tested, or will be tested is present; and

(4) Any facility where any record or other document relating to any of the above is located.

(b) Upon admission to any facility referred to in paragraph (a) of this section, EPA enforcement officers or EPA authorized representatives are authorized to perform the following inspection-related activities:

(1) To inspect and monitor any aspects of engine assembly, storage, testing and other procedures, and the facilities in which these procedures are conducted;

(2) To inspect and monitor any aspect of engine test procedures or activities, including, but not limited to, engine selection, preparation, service accumulation, emission test cycles, and maintenance and verification of test equipment calibration;

(3) To inspect and make copies of any records or documents related to the assembly, storage, selection and testing of an engine in compliance with a test order; and

(4) To inspect and photograph any part or aspect of any engine and any component used in the assembly thereof that is reasonably related to the purpose of the entry.

(c) EPA enforcement officers or EPA authorized representatives are authorized to obtain reasonable assistance without cost from those in charge of a facility to help the officers perform any function listed in this subpart, and they are authorized to request the recipient of a test order to make arrangements with those in charge of a facility operated for the manufacturer's benefit to furnish reasonable assistance without cost to EPA, whether or not the recipient controls the facility.

(1) Reasonable assistance includes, but is not limited to, clerical, copying, interpretation and translation services, the making available on an EPA enforcement officer's or EPA authorized representative's request of personnel of the facility being inspected during their working hours to inform the EPA

enforcement officer or EPA authorized representative of how the facility operates and to answer the officer's questions, and the performance on request of emission tests on any engine which is being, has been, or will be used for SEA testing.

(2) A manufacturer may be compelled to cause the personal appearance of any employee at such a facility before an EPA enforcement officer or EPA authorized representative by written request for his or her appearance, signed by the Assistant Administrator for Air and Radiation, served on the manufacturer. Any such employee who has been instructed by the manufacturer to appear will be entitled to be accompanied, represented, and advised by counsel.

(d) EPA enforcement officers or EPA authorized representatives are authorized to seek a warrant or court order authorizing the EPA enforcement officers or EPA authorized representatives to conduct activities related to entry and access as authorized in this section, as appropriate, to execute the functions specified in this section. EPA enforcement officers or authorized representatives may proceed ex parte to obtain a warrant whether or not the EPA enforcement officers or EPA authorized representatives first attempted to seek permission of the recipient of the test order or the party in charge of the facilities in question to conduct activities related to entry and access as authorized in this section.

(e) A recipient of a test order shall permit an EPA enforcement officer(s) or EPA authorized representative(s) who presents a warrant or court order to conduct activities related to entry and access as authorized in this section and as described in the warrant or court order. The recipient shall also cause those in charge of its facility or a facility operated for its benefit to permit entry and access as authorized in this section pursuant to a warrant or court order whether or not the recipient controls the facility. In the absence of a warrant or court order, an EPA enforcement officer(s) or EPA authorized representative(s) may conduct activities related to entry and access as authorized in this section only upon the consent of the recipient of the test order or the party in charge of the facilities in question.

(f) It is not a violation of this part or of the Clean Air Act for any person to refuse to permit an EPA enforcement officer(s) or an EPA authorized representative(s) to conduct activities related to entry and access as authorized in this section if the officer or representative appears without a warrant or court order.

(g) A manufacturer is responsible for locating its foreign testing and manufacturing facilities in jurisdictions in which local foreign law does not prohibit an EPA enforcement officer(s) or an EPA authorized representative(s) from conducting the entry and access activities specified in this section. EPA will not attempt to make any inspections which it has been informed that local foreign law prohibits.

§ 90.507 Sample selection.

(a) Engines comprising a test sample will be selected at the location and in the manner specified in the test order. If a manufacturer determines that the test engines cannot be selected in the manner specified in the test order, an alternative selection procedure may be employed, provided the manufacturer requests approval of the alternative procedure prior to the start of test sample selection, and the Administrator approves the procedure.

(b) The manufacturer shall assemble the test engines of the family selected for testing using its normal mass production process for engines to be distributed into commerce. If, between the time the manufacturer is notified of a test order and the time the manufacturer finishes selecting test engines, the manufacturer implements any change(s) in its production processes, including quality control, which may reasonably be expected to affect the emissions of the engines selected, then the manufacturer shall, during the audit, inform the Administrator of such changes. If the test engines are selected at a location where they do not have their operational and emission control systems installed, the test order will specify the manner and location for selection of components to complete assembly of the engines. The manufacturer shall assemble these components onto the test engines using normal assembly and quality control procedures as documented by the manufacturer.

(c) No quality control, testing, or assembly procedures will be used on the test engine or any portion thereof, including parts and subassemblies, that have not been or will not be used during the production and assembly of all other engines of that family, unless the Administrator approves the modification in assembly procedures pursuant to paragraph (b) of this section.

(d) The test order may specify that an EPA enforcement officer(s) or authorized representative(s), rather than the manufacturer, select the test engines according to the method specified in the test order.

(e) The order in which test engines are selected determines the order in which test results are to be used in applying the sampling plan in accordance with § 90.510.

(f) The manufacturer shall keep on hand all untested engines, if any, comprising the test sample until a pass or fail decision is reached in accordance with § 90.510(e). The manufacturer may ship any tested engine which has not failed in accordance with § 90.510(b). However, once the manufacturer ships any test engine, it relinquishes the prerogative to conduct retests as provided in § 90.508(i).

§ 90.508 Test procedures.

(a) For nonroad engines subject to the provisions of this subpart, the prescribed test procedures are the appropriate small SI engine test procedures as described in subpart E of this part.

(b)(1) The manufacturer shall not adjust, repair, prepare, or modify the engines selected for testing and shall not perform any emission tests on engines selected for testing pursuant to the test order unless this adjustment, repair, preparation, modification, and/or tests are documented in the manufacturer's engine assembly and inspection procedures and are actually performed or unless these adjustments and/or tests are required or permitted under this subpart or are approved in advance by the Administrator.

(2) The Administrator may adjust or cause to be adjusted any engine parameter which the Administrator has determined to be subject to adjustment for certification and Selective Enforcement Audit testing in accordance with § 90.112(c), to any setting within the physically adjustable range of that parameter, as determined by the Administrator in accordance with § 90.112(a), prior to the performance of any tests. However, if the idle speed parameter is one which the Administrator has determined to be subject to adjustment, the Administrator shall not adjust it to any setting which causes a lower engine idle speed than would have been possible within the physically adjustable range of the idle speed parameter if the manufacturer had accumulated 12 hours of service on the engine under paragraph (c) of this section, all other parameters being identically adjusted for the purpose of the comparison. The manufacturer may be requested to supply information needed to establish an alternate minimum idle speed. The Administrator, in making or specifying

these adjustments, may consider the effect of the deviation from the manufacturer's recommended setting on emission performance characteristics as well as the likelihood that similar settings will occur on in-use engines. In determining likelihood, the Administrator may consider factors such as, but not limited to, the effect of the adjustment on engine performance characteristics and surveillance information from similar in-use engines.

(c) *Service Accumulation.* Prior to performing exhaust emission testing on an SEA test engine, the manufacturer may accumulate on each engine a number of hours of service equal to the greater of 12 hours or the number of hours the manufacturer accumulated during certification on the emission data engine corresponding to the family specified in the test order.

(1) Service accumulation must be performed in a manner using good engineering judgment to obtain emission results representative of normal production engines. This service accumulation must be consistent with the new engine break-in instructions contained in the applicable owner's manual.

(2) The manufacturer shall accumulate service at a minimum rate of 12 hours per engine during each 24-hour period, unless otherwise approved by the Administrator.

(i) The first 24 hour period for service shall begin as soon as authorized checks, inspections, and preparations are completed on each engine.

(ii) The minimum service or mileage accumulation rate does not apply on weekends or holidays.

(iii) If the manufacturer's service or target is less than the minimum rate specified (12 hours per day), then the minimum daily accumulation rate shall be equal to the manufacturer's service target.

(3) Service accumulation shall be completed on a sufficient number of test engines during consecutive 24-hour periods to assure that the number of engines tested per day fulfills the requirements of paragraphs (g)(1) and (g)(2) of this section.

(d) The manufacturer shall not perform any maintenance on test engines after selection for testing, nor shall the Administrator allow deletion of any engine from the test sequence, unless requested by the manufacturer and approved by the Administrator before any engine maintenance or deletion.

(e) The manufacturer shall expeditiously ship test engines from the point of selection to the test facility. If the test facility is not located at or in close proximity to the point of selection, the manufacturer shall assure that test engines arrive at the test facility within 24 hours of selection, except that the Administrator may approve more time for shipment based upon a request by the manufacturer accompanied by a satisfactory justification.

(f) If an engine cannot complete the service accumulation or an emission test because of a malfunction, the manufacturer may request that the Administrator authorize either the repair of that engine or its deletion from the test sequence.

(g) Whenever a manufacturer conducts testing pursuant to a test order issued under this subpart, the manufacturer shall notify the Administrator within one working day of receipt of the test order as to which test facility will be used to comply with the test order. If no test cells are available at a desired facility, the manufacturer must provide alternate testing capability satisfactory to the Administrator.

(1) A manufacturer with projected nonroad engine sales for the United States market for the applicable year of 7,500 or greater shall complete emission testing at a minimum rate of two engines per 24-hour period, including each voided test.

(2) A manufacturer with projected nonroad engine sales for the United States market for the applicable year of less than 7,500 shall complete emission testing at a minimum rate of one engine per 24-hour period, including each voided test.

(3) The Administrator may approve a lower daily rate of emission testing based upon a request by a manufacturer accompanied by a satisfactory justification.

(h) The manufacturer shall perform test engine selection, shipping, preparation, service accumulation, and testing in such a manner as to assure that the audit is performed in an expeditious manner.

(i) *Retesting.* (1) The manufacturer may retest any engines tested during a Selective Enforcement Audit once a fail decision for the audit has been reached in accordance with § 90.510(e).

(2) The Administrator may approve retesting at other times based upon a request by the manufacturer accompanied by a satisfactory justification.

(3) The manufacturer may retest each engine a total of three times. The manufacturer shall test each engine or vehicle the same number of times. The manufacturer may accumulate additional service before conducting a retest, subject to the provisions of paragraph (c) of this section.

(j) A manufacturer may test engines with the test procedure specified in subpart E of this part to demonstrate compliance with the exhaust emission standards; however, if alternate procedures were used in certification pursuant to § 90.120, then those alternate procedures shall be used.

§ 90.509 Calculation and reporting of test results.

(a) Initial test results are calculated following the applicable test procedure specified in paragraph (a) of § 90.508. The manufacturer shall round these results, in accordance with ASTM E29–93a, to the number of decimal places contained in the applicable emission standard expressed to one additional significant figure. ASTM E29–93a has been incorporated by reference. See § 90.7.

(b) Final test results are calculated by summing the initial test results derived in paragraph (a) of this section for each test engine, dividing by the number of tests conducted on the engine, and rounding in accordance with ASTM E29–93a to the same number of decimal places contained in the applicable standard expressed to one additional significant figure.

(c) Within five working days after completion of testing of all engines pursuant to a test order, the manufacturer shall submit to the Administrator a report which includes the following information:

(1) The location and description of the manufacturer's exhaust emission test facilities which were utilized to conduct testing reported pursuant to this section;

(2) The applicable standards or compliance levels against which the engines were tested;

(3) A description of the engine and its associated emission-related component selection method used;

(4) For each test conducted;

(i) Test engine description, including:

(A) Configuration and engine family identification;

(B) Year, make and build date;

(C) Engine identification number; and

(D) Number of hours of service accumulated on engine prior to testing;

(ii) Location where service accumulation was conducted and description of accumulation procedure and schedule;

(iii) Test number, date, test procedure used, initial test results before and after rounding and final test results for all exhaust emission tests, whether valid or invalid, and the reason for invalidation, if applicable;

(iv) A complete description of any modification, repair, preparation,

maintenance, and/or testing which was performed on the test engine and has not been reported pursuant to any other paragraph of this subpart and will not be performed on all other production engines;

(v) Where an engine was deleted from the test sequence by authorization of the Administrator, the reason for the deletion;

(vi) Any other information the Administrator may request relevant to the determination as to whether the new engines being manufactured by the manufacturer do in fact conform with the regulations with respect to which the certificate of conformity was issued; and

(5) The following statement and endorsement:

This report is submitted pursuant to Sections 213 and 208 of the Clean Air Act. This Selective Enforcement Audit was conducted in complete conformance with all applicable regulations under 40 CFR Part 90 *et seq.* and the conditions of the test order. No emission-related changes to production processes or quality control procedures for the engine family tested have been made between receipt of the test order and conclusion of the audit. All data and information reported herein is, to the best of (Company Name) knowledge, true and accurate. I am aware of the penalties associated with violations of the Clean Air Act and the regulations thereunder. (Authorized Company Representative.)

§ 90.510 Compliance with acceptable quality level and passing and failing criteria for selective enforcement audits.

(a) The prescribed acceptable quality level is 40 percent.

(b) A failed engine is one whose final test results pursuant to § 90.509(b), for one or more of the applicable pollutants, exceed the applicable emission standard.

(c) The manufacturer shall test engines comprising the test sample until a pass decision is reached for all pollutants or a fail decision is reached for one pollutant. A pass decision is reached when the cumulative number of failed engines, as defined in paragraph (b) of this section, for each pollutant is less than or equal to the pass decision number, as defined in paragraph (d) of this section, appropriate to the cumulative number of engines tested. A fail decision is reached when the cumulative number of failed engines for one or more pollutants is greater than or equal to the fail decision number, as defined in paragraph (d) of this section, appropriate to the cumulative number of engines tested.

(d) The pass and fail decision numbers associated with the cumulative number of engines tested are determined by using the tables in Appendix A to this subpart, ''Sampling Plans for Selective Enforcement Auditing of Small Nonroad Engines,'' appropriate to the projected sales as made by the manufacturer in its report to EPA under § 90.505(c)(1). In the tables in Appendix A to this subpart, sampling plan ''stage'' refers to the cumulative number of engines tested. Once a pass or fail decision has been made for a particular pollutant, the number of engines with final test results exceeding the emission standard for that pollutant shall not be considered any further for the purposes of the audit.

(e) Passing or failing of an SEA occurs when the decision is made on the last engine test required to make a decision under paragraph (c) of this section.

(f) The Administrator may terminate testing earlier than required in paragraph (c) of this section.

§ 90.511 Suspension and revocation of certificates of conformity.

(a) The certificate of conformity is suspended with respect to any engine failing pursuant to § 90.510(b) effective from the time that testing of that engine is completed.

(b) The Administrator may suspend the certificate of conformity for a family which does not pass an SEA, pursuant to paragraph § 90.510(c), based on the first test or all tests conducted on each engine. This suspension will not occur before ten days after failure of the audit.

(c) If the results of testing pursuant to these regulations indicate that engines of a particular family produced at one plant of a manufacturer do not conform to the regulations with respect to which the certificate of conformity was issued, the Administrator may suspend the certificate of conformity with respect to that family for engines manufactured by the manufacturer at all other plants.

(d) Notwithstanding the fact that engines described in the application may be covered by a certificate of conformity, the Administrator may suspend such certificate in whole or in part if the Administrator finds any one of the following infractions to be substantial:

(1) The manufacturer refuses to comply with the provisions of a test order issued by the Administrator under § 90.503.

(2) The manufacturer refuses to comply with any of the requirements of this subpart.

(3) The manufacturer submits false or incomplete information in any report or information provided to the Administrator under this subpart.

(4) The manufacturer renders inaccurate any test data submitted under this subpart.

(5) An EPA enforcement officer or EPA authorized representative is denied the opportunity to conduct activities related to entry and access as authorized in this subpart and a warrant or court order is presented to the manufacturer or the party in charge of a facility in question.

(6) An EPA enforcement officer or EPA authorized representative is unable to conduct activities related to entry and access as authorized in § 90.506 because a manufacturer has located a facility in a foreign jurisdiction where local law prohibits those activities.

(e) The Administrator shall notify the manufacturer in writing of any suspension or revocation of a certificate of conformity in whole or in part, except that the certificate is immediately suspended with respect to any failed engines as provided for in paragraph (a) of this section.

(f) The Administrator may revoke a certificate of conformity for a family when the certificate has been suspended pursuant to paragraph (b) or (c) of this section if the proposed remedy for the nonconformity, as reported by the manufacturer to the Administrator, is one requiring a design change or changes to the engine and/or emission control system as described in the application for certification of the affected family.

(g) Once a certificate has been suspended for a failed engine, as provided for in paragraph (a) of this section, the manufacturer shall take the following actions:

(1) Before the certificate is reinstated for that failed engine;

(i) Remedy the nonconformity; and

(ii) Demonstrate that the engine conforms to applicable standards by retesting the engine in accordance with these regulations.

(2) Submit a written report to the Administrator, after successful completion of testing on the failed engine, which contains a description of the remedy and test results for each engine in addition to other information that may be required by this regulation.

(h) Once a certificate for a failed family has been suspended pursuant to paragraph (b) or (c) of this section, the manufacturer shall take the following actions before the Administrator will consider reinstating the certificate:

(1) Submit a written report to the Administrator which identifies the reason for the noncompliance of the engines, describes the proposed remedy,

including a description of any proposed quality control and/or quality assurance measures to be taken by the manufacturer to prevent future occurrences of the problem, and states the date on which the remedies will be implemented.

(2) Demonstrate that the engine family for which the certificate of conformity has been suspended does in fact comply with these regulations by testing engines selected from normal production runs of that engine family, at the plant(s), port facility(ies) or associated storage facility(ies) specified by the Administrator, in accordance with the conditions specified in the initial test order. If the manufacturer elects to continue testing individual engines after suspension of a certificate, the certificate is reinstated for an engine actually determined to be in conformance with the applicable standards through testing in accordance with the applicable test procedures, provided that the Administrator has not revoked the certificate pursuant to paragraph (f) of this section.

(i) Once the certificate has been revoked for a family and the manufacturer desires to continue introduction into commerce of a modified version of that family, the following actions shall be taken before the Administrator may consider issuing a certificate for that modified family:

(1) If the Administrator determines that the proposed change(s) in engine design may have an effect on emission performance deterioration, the Administrator shall notify the manufacturer, within five working days after receipt of the report in paragraph (f) of this section, whether subsequent testing under this subpart will be sufficient to evaluate the proposed change or changes or whether additional testing will be required; and

(2) After implementing the change or changes intended to remedy the nonconformity, the manufacturer shall demonstrate that the modified engine family does in fact conform with these regulations by testing engines selected from normal production runs of that modified engine family in accordance with the conditions specified in the initial test order. If the subsequent audit results in passing of the audit, the Administrator shall reissue the certificate or issue a new certificate, as the case may be, to include that family, provided that the manufacturer has satisfied the testing requirements of paragraph (i)(1) of this section. If the subsequent audit is failed, the revocation remains in effect. Any design change approvals under this subpart are limited to the family affected by the test order.

(j) At any time subsequent to an initial suspension of a certificate of conformity for a test engine pursuant to paragraph (a) of this section, but not later than 15 days or such other period as may be allowed by the Administrator after notification of the Administrator's decision to suspend or revoke a certificate of conformity in whole or in part pursuant to paragraphs (b), (c), or (f) of this section, a manufacturer may request a hearing as to whether the tests have been properly conducted or any sampling methods have been properly applied.

(k) Any suspension of a certificate of conformity under paragraph (d) of this section shall:

(1) Be made only after the manufacturer concerned has been offered an opportunity for a hearing conducted in accordance with §§ 90.512, 90.513, and 90.514 and

(2) Not apply to engines no longer in the possession of the manufacturer.

(*l*) After the Administrator suspends or revokes a certificate of conformity pursuant to this section and prior to the commencement of a hearing under § 90.512, if the manufacturer demonstrates to the Administrator's satisfaction that the decision to suspend, revoke, or void the certificate was based on erroneous information, the Administrator shall reinstate the certificate.

(m) To permit a manufacturer to avoid storing non-test engines when conducting an audit of a family subsequent to a failure of an SEA and while reauditing the failed family it may request that the Administrator conditionally reinstate the certificate for that family. The Administrator may reinstate the certificate subject to the condition that the manufacturer commits to recall all engines of that family produced from the time the certificate is conditionally reinstated if the family fails the subsequent audit at the level of the standard and to remedy any nonconformity at no expense to the owner.

§ 90.512 Request for public hearing.

(a) If the manufacturer disagrees with the Administrator's decision to suspend, revoke or void a certificate or disputes the basis for an automatic suspension pursuant to § 90.511(a), the manufacturer may request a public hearing.

(b) The manufacturer's request shall be filed with the Administrator not later than 15 days after the Administrator's notification of his or her decision to suspend or revoke, unless otherwise specified by the Administrator. The manufacturer shall simultaneously serve two copies of this request upon the Director of the Manufacturers Operations Division and file two copies with the Hearing Clerk of the Agency. Failure of the manufacturer to request a hearing within the time provided constitutes a waiver of the right to a hearing. Subsequent to the expiration of the period for requesting a hearing as of right, the Administrator may, in his or her discretion and for good cause shown, grant the manufacturer a hearing to contest the suspension or revocation.

(c) A manufacturer shall include in the request for a public hearing:

(1) A statement as to which engine configuration(s) within a family is to be the subject of the hearing;

(2) A concise statement of the issues to be raised by the manufacturer at the hearing, except that in the case of the hearing requested under § 90.511(j), the hearing is restricted to the following issues:

(i) Whether tests have been properly conducted (specifically, whether the tests were conducted in accordance with applicable regulations under this part and whether test equipment was properly calibrated and functioning);

(ii) Whether sampling plans have been properly applied (specifically, whether sampling procedures specified in Appendix A of this subpart were followed and whether there exists a basis for distinguishing engines produced at plants other than the one from which engines were selected for testing which would invalidate the Administrator's decision under § 90.511(c));

(3) A statement specifying reasons why the manufacturer believes it will prevail on the merits of each of the issues raised; and

(4) A summary of the evidence which supports the manufacturer's position on each of the issues raised.

(d) A copy of all requests for public hearings will be kept on file in the Office of the Hearing Clerk and will be made available to the public during Agency business hours.

§ 90.513 Administrative procedures for public hearing.

(a) The Presiding Officer shall be an Administrative Law Judge appointed pursuant to 5 U.S.C. 3105 (see also 5 CFR part 930 as amended).

(b) The Judicial Officer shall be an officer or employee of the Agency appointed as a Judicial Officer by the Administrator, pursuant to this section, who shall meet the qualifications and perform functions as follows:

(1) *Qualifications.* A Judicial Officer may be a permanent or temporary employee of the Agency who performs other duties for the Agency. The Judicial Officer shall not be employed by the Office of Enforcement or have any connection with the preparation or presentation of evidence for a hearing held pursuant to this subpart. The Judicial Officer shall be a graduate of an accredited law school and a member in good standing of a recognized Bar Association of any state or the District of Columbia.

(2) *Functions.* The Administrator may consult with the Judicial Officer or delegate all or part of the Administrator's authority to act in a given case under this section to a Judicial Officer, provided that this delegation does not preclude the Judicial Officer from referring any motion or case to the Administrator when the Judicial Officer determines such referral to be appropriate.

(c) For the purposes of this section, one or more Judicial Officers may be designated. As work requires, a Judicial Officer may be designated to act for the purposes of a particular case.

(d) *Summary decision.* (1) In the case of a hearing requested under § 90.511(j), when it clearly appears from the data and other information contained in the request for a hearing that no genuine and substantial question of fact exists with respect to the issues specified in § 90.512(c)(2), the Administrator shall enter an order denying the request for a hearing and reaffirming the original decision to suspend or revoke a certificate of conformity, if this decision has been made pursuant to § 90.511(e) at any time prior to the decision to deny the request for a hearing.

(2) In the case of a hearing requested under § 90.512 to challenge a proposed suspension of a certificate of conformity for the reasons specified in § 90.511(d), when it clearly appears from the data and other information contained in the request for the hearing that no genuine and substantial question of fact exists with respect to the issue of whether the refusal to comply with the provisions of a test order or any other requirement of § 90.503 was caused by conditions and circumstances outside the control of the manufacturer, the Administrator shall enter an order denying the request for a hearing and suspending the certificate of conformity.

(3) Any order issued under paragraph (d)(1) or (d)(2) of this section has the force and effect of a final decision of the Administrator, as issued pursuant to § 90.515.

(4) If the Administrator determines that a genuine and substantial question of fact does exist with respect to any of the issues referred to in paragraphs (d)(1) and (d)(2) of this section, the Administrator shall grant the request for a hearing and publish a notice of public hearing in the **Federal Register** or by such other means as the Administrator finds appropriate to provide notice to the public.

(e) *Filing and service.* (1) An original and two copies of all documents or papers required or permitted to be filed pursuant to this section and § 90.512(c) must be filed with the Hearing Clerk of the Agency. Filing is considered timely if mailed, as determined by the postmark, to the Hearing Clerk within the time allowed by this section and § 90.512(b). If filing is to be accomplished by mailing, the documents must be sent to the address set forth in the notice of public hearing referred to in paragraph (d)(4) of this section.

(2) To the maximum extent possible, testimony will be presented in written form. Copies of written testimony will be served upon all parties as soon as practicable prior to the start of the hearing. A certificate of service will be provided on or accompany each document or paper filed with the Hearing Clerk. Documents to be served upon the Director of the Manufacturers Operations Division must be sent by registered mail to: Director, Manufacturers Operations Division, U.S. Environmental Protection Agency, 6405–J, 401 M Street S.W., Washington, D.C. 20460. Service by registered mail is complete upon mailing.

(f) *Computation of Time.* (1) In computing any period of time prescribed or allowed by this section, except as otherwise provided, the day of the act or event from which the designated period of time begins to run is not included. Saturdays, Sundays, and federal legal holidays are included in computing the period allowed for the filing of any document or paper, except that when the period expires on a Saturday, Sunday, or federal legal holiday, the period is extended to include the next following business day.

(2) A prescribed period of time within which a party is required or permitted to do an act is computed from the time of service, except that when service is accomplished by mail, three days will be added to the prescribed period.

(g) *Consolidation.* The Administrator or the Presiding Officer in his or her discretion may consolidate two or more proceedings to be held under this section for the purpose of resolving one or more issues whenever it appears that consolidation will expedite or simplify consideration of these issues. Consolidation does not affect the right of any party to raise issues that could have been raised if consolidation had not occurred.

(h) *Hearing Date.* To the extent possible, hearings under § 90.512 will be scheduled to commence within 14 days of receipt of the application in § 90.512.

§ 90.514 Hearing procedures.

The procedures provided in § 86.1014–84 (i) to (s) apply for hearings requested pursuant to § 90.512, suspension, revocation, or voiding of a certificate of conformity.

§ 90.515 Appeal of hearing decision.

The procedures provided in § 86.1014–84 (t) to (aa) apply for appeals filed with respect to hearings held pursuant to § 90.514.

§ 90.516 Treatment of confidential information.

The provisions for treatment of confidential information described in § 90.4 apply to this subpart.

Appendix A to Subpart F—Sampling Plans for Selective Enforcement Auditing of Small Nonroad Engines

TABLE 1.—SAMPLING PLAN CODE LETTER

Annual engine family sales	Code letter
50–99	A
100–299	B
300–499	C
500 or greater	D

TABLE 2.—SAMPLE PLAN FOR CODE LETTER ''A''

[Sample inspection criteria]

Stage	Pass No.	Fail No.	Stage	Pass No.	Fail No.1
1	(1)	(2)	16	6	11
2	(1)	(2)	17	7	12
3	(1)	(2)	18	7	12
4	0	(2)	19	8	13
5	0	(2)	20	8	13
6	1	6	21	9	14
7	1	7	22	10	14
8	2	7	23	10	15
9	2	8	24	11	15
10	3	8	25	11	16
11	3	8	26	12	16
12	4	9	27	12	17
13	5	10	28	13	17
14	5	10	29	14	17
15	6	11	30	16	17

[1] Test sample passing not permitted at this stage.
[2] Test sample failure not permitted at this stage.

TABLE 3.—SAMPLING PLAN FOR CODE LETTER ''B''

[Sample Inspection Criteria]

Stage	Pass No.	Fail No.
1	(1)	(2)
2	(1)	(2)
3	(1)	(2)
4	(1)	(2)
5	0	(2)
6	1	6
7	1	7
8	2	7
9	2	8
10	3	8
11	3	9
12	4	9
13	4	10
14	5	10
15	5	11
16	6	12
17	6	12
18	7	13
19	8	13
10	8	14
21	9	14
22	9	15
23	10	15
24	10	16
25	11	16
26	11	17
27	12	17
28	12	18
29	13	18
30	13	19
31	14	19
32	14	20
33	15	20
34	16	21
35	16	21
36	17	22
37	17	22
38	18	22
39	18	22
40	21	22

[1] Test sample passing not permitted at this stage.
[2] Test sample failure not permitted at this stage.

TABLE 4.—SAMPLING PLAN FOR CODE LETTER ''C''

[Sample Inspection Criteria]

Stage	Pass No.	Fail No.
1	(1)	(2)
2	(1)	(2)
3	(1)	(2)
4	(1)	(2)
5	0	(2)
6	0	6
7	1	7
8	2	7
9	2	8
10	3	9
11	3	9
12	4	10
13	4	10
14	5	11
15	5	11
16	6	12
17	6	12
18	7	13
19	7	13
20	8	14
21	8	14
22	9	15
23	10	15
24	10	16
25	11	16
26	11	17
27	12	17
28	12	18
29	13	18
30	13	19
31	14	19
32	14	20
33	15	20
34	15	21
35	16	21
36	16	22
37	17	22
38	18	23
39	18	23
40	19	24
41	19	24

TABLE 4.—SAMPLING PLAN FOR CODE LETTER ''C''—Continued

[Sample Inspection Criteria]

Stage	Pass No.	Fail No.
42	20	25
43	20	25
44	21	26
45	21	27
46	22	27
47	22	27
48	23	27
49	23	27
50	26	27

[1] Test sample passing not permitted at this stage.
[2] Test sample failure not permitted at this stage.

TABLE 5.—SAMPLING PLAN FOR CODE LETTER ''D''

[Sample Inspection Criteria]

Stage	Pass No.	Fail No.
1	(1)	(2)
2	(1)	(2)
3	(1)	(2)
4	(1)	(2)
5	0	(2)
6	0	6
7	1	7
8	2	8
9	2	8
10	3	9
11	3	9
12	4	10
13	4	10
14	5	11
15	5	11
16	6	12
17	6	12
18	7	13
19	7	13
20	8	14
21	8	14

TABLE 5.—SAMPLING PLAN FOR CODE LETTER ''D''—Continued

[Sample Inspection Criteria]

Stage	Pass No.	Fail No.
22	9	15
23	9	15
24	10	16
25	11	16
26	11	17
27	12	17
28	12	18
29	13	19
30	13	19
31	14	20
32	14	20
33	15	21
34	15	21
35	16	22
36	16	22
37	17	23
38	17	23
39	18	24
40	18	24
41	19	25
42	19	26
43	20	26
44	21	27
45	21	27
46	22	28
47	22	28
48	23	29
49	23	29
50	24	30
51	24	30
52	25	31
53	25	31
54	26	32
55	26	32
56	27	33
57	27	33
58	28	33
59	28	33
60	32	33

[1] Test sample passing not permitted at this stage.

[2] Test sample failure not permitted at this stage.

Subpart G—Importation of Nonconforming Engines

§ 90.601 Applicability.

(a) Except where otherwise indicated, this subpart is applicable to engines and vehicles which are offered for importation or imported into the United States and for which the Administrator has promulgated regulations under subpart B of this part prescribing emission standards, but which are not covered by certificates of conformity issued under section 213 and section 206(a) of the Clean Air Act (that is, which are nonconforming engines as defined below) and under subpart B of this part at the time of importation or conditional importation, as applicable. Compliance with regulations under this subpart shall not relieve any person or entity from compliance with other applicable provisions of the Clean Air Act.

(b) Regulations prescribing further procedures for the importation of small SI engines into the Customs territory of the United States, as defined in 19 U.S.C. 1202, are set forth in U.S. Customs Service regulations.

§ 90.602 Definitions.

The definitions in subpart A of this part apply to this subpart. The following definitions also apply to this subpart.

Certificate of conformity. The document issued by the Administrator under section 213 and section 206(a) of the Act.

Nonconforming engine. An engine which is not covered by a certificate of conformity prior to final or conditional admission (or for which such coverage has not been adequately demonstrated to EPA).

Original engine manufacturer (OEM). The entity which originally manufactured the engine.

Original production (OP) year. The calendar year in which the engine was originally produced by the OEM.

Original production (OP) years old. The age of an engine as determined by subtracting the original production year of the engine from the calendar year of importation.

Production changes. Those changes in the engine configuration, equipment or calibration which are made by an OEM in the course of engine production and required to be reported under § 90.123.

United States. United States includes the Customs territory of the United States as defined in 19 U.S.C. 1202, and the Virgin Islands, Guam, American Samoa and the Commonwealth of the Northern Mariana Islands.

§ 90.603 [Reserved]

§ 90.604 General requirements.

(a) A nonconforming engine offered for importation into the United States may only be imported for purposes other than resale under § 90.611, or under the provisions of § 90.612, provided that an exemption or exclusion is granted by the Administrator.

(b) Final admission shall not be granted unless:

(1) The engine is imported for purposes other than resale under § 90.611; or

(2) The engine is exempted or excluded under § 90.612.

(c) An engine offered for importation may be admitted into the United States. In order to obtain admission, the importer must submit to the Administrator a written request for approval containing the following:

(1) Identification of the importer and the importer's address, telephone number, and taxpayer identification number;

(2) Identification of the engine owner, the owner's address, telephone number, and taxpayer identification number;

(3) Identification of the engine including make, model, identification number, and original production year;

(4) Information indicating under what provision of these regulations the engine is to be imported;

(5) Identification of the place where the subject engine is to be stored until EPA approval of the importer's application to the Administrator for final admission;

(6) Authorization for EPA enforcement officers to conduct inspections or testing otherwise permitted by the Act or regulations thereunder; and

(7) Such other information as is deemed necessary by the Administrator.

§ 90.605–90.610 [Reserved]

§ 90.611 Importation for purposes other than resale.

(a) Any individual may import on a one-time basis three or fewer nonconforming engines for purposes other than resale. Such importation by individuals is permitted without modification to the engines and without prior written approval of EPA. Importations under this provision shall be made by completing such applications as required by the Administrator. Such applications shall contain:

(1) Identification of the importer of the engine and the importer's address, telephone number, and taxpayer identification number;

(2) Identification of the engine owner, the owner's address, telephone number, and taxpayer identification number;

(3) The number of engines imported under § 90.611 by the individual;

(4) A statement that the individual has not previously imported any engines under § 90.611;

(5) A statement that the individual is not importing the engines for the purpose of resale;

(6) For each engine imported, identification of the engine including make, model, identification number, and original production year;

(7) Information indicating under what provision of these regulations the engine is to be imported;

(8) Authorization for EPA enforcement officers to conduct inspections permitted by the Act or regulations thereunder;

(9) Such other information as is deemed necessary by the Administrator.

(b) EPA will not require a U.S. Customs Service bond for a nonconforming engine which is imported under § 90.611.

§ 90.612 Exemptions and exclusions.

(a) Individuals shall be eligible for importing engines into the United States under the provisions of this section, unless otherwise specified.

(b) Notwithstanding other requirements of this subpart, an engine entitled to one of the temporary exemptions of this paragraph may be conditionally admitted into the United States if prior written approval for the conditional admission is obtained from the Administrator. Conditional admission is to be under U.S. Customs Service bond. The Administrator may request that the U.S. Customs Service require a specific bond amount to ensure compliance with the requirements of the Act and this subpart. A written request for approval from the Administrator is to contain the identification required in § 90.604(c) and information that demonstrates that the importer is entitled to the exemption. Noncompliance with provisions of this section may result in the forfeiture of the total amount of the bond or exportation of the engine. The following temporary exemptions are permitted by this paragraph:

(1) *Exemption for repairs or alterations.* Upon written approval by EPA, an owner of engines may conditionally import under bond such engines solely for purpose of repair(s) or alteration(s). The engines may not be operated in the United States other than for the sole purpose of repair or alteration. They may not be sold or leased in the United States and are to be exported upon completion of the repair(s) or alteration(s).

(2) *Testing exemption.* A test engine may be conditionally imported by a person subject to the requirements of § 90.905. A test engine may be operated in the United States provided that the operation is an integral part of the test. This exemption is limited to a period not exceeding one year from the date of importation unless a request is made by the appropriate importer concerning the engine in accordance with § 90.905(f) for a subsequent one-year period.

(3) *Display exemptions.*

(i) An engine intended solely for display may be conditionally imported subject to the requirements of § 90.907.

(ii) A display engine may be imported by any person for purposes related to a business or the public interest. Such purposes do not include collections normally inaccessible or unavailable to the public on a daily basis, display of an engine at a dealership, private use, or other purpose that the Administrator determines is not appropriate for display exemptions. A display engine may not be sold in the United States and may not be operated in the United States except for the operation incident and necessary to the display purpose.

(iii) A temporary display exemption will be granted for 12 months (one year) or for the duration of the display purpose, whichever is shorter. Two extensions of up to 12 months (one year) each are available upon approval by the Administrator. In no circumstances, however, may the total period of exemption exceed 36 months (three years).

(c) Notwithstanding any other requirement of this subpart, an engine may be finally admitted into the United States under this paragraph if prior written approval for such final admission is obtained from the Administrator. Conditional admission of these engines under this subpart is not permitted for the purpose of obtaining such written approval from the Administrator. A request for approval is to contain the identification information required in § 90.604(c) and information that demonstrates that the importer is entitled to the exemption or exclusion. The following exemptions or exclusions are permitted by this paragraph:

(1) *National security exemption.* An engine may be imported under the national security exemption found at § 90.908.

(2) *Hardship exemption.* The Administrator may exempt on a case-by-case basis an engine from federal emission requirements to accommodate unforeseen cases of extreme hardship or extraordinary circumstances.

(3) *Exemption for engines identical to United States certified versions.*

(i) A person (including businesses) is eligible for importing an engine into the United States under the provisions of this paragraph. An exemption will be granted if the engine:

(A) is owned by the importer;

(B) is not offered for importation for the purpose of resale; and

(C) is proven to be identical, in all material respects, to an engine certified by the original equipment manufacturer (OEM) for sale in the United States or is proven to have been modified to be identical, in all material respects, to an engine certified by the OEM for sale in the United States according to complete written instructions provided by the OEM's United States representative, or his/her designee.

(ii) *Proof of Conformity.* (A) Documentation submitted pursuant to this section for the purpose of proving conformity of individual engines is to contain sufficiently organized data or evidence demonstrating that the engine identified pursuant to § 90.604(c) is identical, in all material respects, to an engine identified in an OEM's application for certification.

(B) If the documentation does not contain all the information required by this part, or is not sufficiently organized, EPA will notify the importer of any areas of inadequacy, and that the documentation will not receive further consideration until the required information or organization is provided.

(C) If EPA determines that the documentation does not clearly or sufficiently demonstrate that an engine is eligible for importation, EPA will notify the importer in writing.

(D) If EPA determines that the documentation clearly and sufficiently demonstrates that an engine is eligible for importation, EPA will grant approval for importation and notify the importer in writing.

(d) Foreign diplomatic and military personnel may import a nonconforming engine without bond. At the time of admission, the importer shall submit to the Administrator the written report required in § 90.604(a) and a statement from the U.S. Department of State confirming qualification for this exemption. Foreign military personnel may, in lieu of a statement from the U.S. Department of State, submit to the Administrator a copy of their orders for duty in the United States. The engine may not be sold in the United States and must be exported if the individual's diplomatic status is no longer applicable, as determined by the Department of State, or the foreign military orders for duty in the United States are no longer applicable, unless subsequently brought into conformity with U.S. emission requirements.

(e) *Competition exclusion.* A nonconforming engine may be conditionally admitted by any person provided the importer demonstrates to the Administrator that the engine is used to propel a nonroad vehicle used solely for competition and obtains prior written approval from the Administrator. A nonconforming engine imported pursuant to this paragraph may not be operated in the United States except for that operation incident and necessary for the competition purpose, unless subsequently brought into conformity with United States emission requirements in accordance with § 90.612(c)(3).

(f) *Exclusions/exemptions based on date of original manufacture.*

(1) Notwithstanding any other requirements of this subpart, engines

originally manufactured prior to model year 1997 are excluded from the requirements of the Act in accordance with section 213 of the Act and may be imported by any person.

(2) Notwithstanding other requirements of this subpart, an engine not subject to an exclusion under § 90.612(f)(1) but greater than 20 original production (OP) years old is entitled to an exemption from the requirements of the Act, provided that it has not been modified in those 20 OP years. At the time of admission, the importer shall submit to the Administrator the written report required in § 90.604(c).

(g) An application for exemption and exclusion provided for in paragraphs (b), (c), and (e) of this section is to be mailed to: U.S. Environmental Protection Agency, Office of Mobile Sources, Manufacturers Operations Division (6405–J), 401 M Street, S.W., Washington, D.C. 20460, Attention: Imports.

§ 90.613 Prohibited acts; penalties.

(a) The importation of an engine which is not covered by a certificate of conformity other than in accordance with this subpart and the entry regulations of the U.S. Customs Service is prohibited. Failure to comply with this subpart is a violation of section 213(d) and section 203 of the Act.

(b) Unless otherwise permitted by this subpart, during a period of conditional admission, the importer of an engine shall not:

(1) Register, license, or operate the engine in the United States; or

(2) Sell or offer the engine for sale.

(c) An engine conditionally admitted pursuant to § 90.612(b), (d), or (e) and not granted final admission within the period of time specified for such conditional admission in the written prior approval obtained from EPA, or within such additional time as designated by the Administrator, is deemed to be unlawfully imported into the United States in violation of section 213(d) and section 203 of the Act, unless the engine has been delivered to the U.S. Customs Service for export or other disposition under applicable Customs laws and regulations. An engine not so delivered is subject to seizure by the U.S. Customs Service.

(d) An importer who violates section 213(d) and section 203 of the Act is subject to a civil penalty under section 205 of the Act of not more than $25,000 for each engine subject to the violation. In addition to the penalty provided in the Act, where applicable, under the exemption provisions of § 90.612(b), a person or entity who fails to deliver the engine to the U.S. Customs Service is liable for liquidated damages in the amount of the bond required by applicable Customs laws and regulations.

§ 90.614 Treatment of confidential information.

The provisions for treatment of confidential information described in § 90.4 apply to this subpart.

Subpart H—[Reserved]

Subpart I—Emission-related Defect Reporting Requirements, Voluntary Emission Recall Program

§ 90.801 Applicability.

The requirements of subpart I are applicable to all nonroad engines and vehicles subject to the provisions of subpart A of part 90. The requirement to report emission-related defects affecting a given class or category of engines will remain applicable for five years from the end of the calendar year in which such engines were manufactured.

§ 90.802 Definitions.

The definitions in subpart A of this part apply to this subpart. All terms not defined herein or in subpart A have the meaning given them in the Act.

Emission-related defect means a defect in design, materials, or workmanship in a device, system, or assembly described in the approved application for certification which affects any applicable parameter or specification enumerated in 40 CFR part 85, Appendix VIII.

Voluntary emission recall means a repair, adjustment, or modification program voluntarily initiated and conducted by a manufacturer to remedy any emission-related defect for which notification of engine owners has been provided.

§ 90.803 Emission defect information report.

(a) A manufacturer must file a defect information report whenever, on the basis of data obtained subsequent to the effective date of these regulations:

(1) The manufacturer determines, in accordance with procedures established by the manufacturer to identify either safety-related or performance defects, that a specific emission-related defect exists; and

(2) A specific emission-related defect exists in 25 or more engines of a given engine family manufactured in the same certificate or model year.

(b) No report must be filed under this section for any emission-related defect corrected prior to the sale of the affected engines to ultimate purchasers.

(c) The manufacturer must submit defect information reports to EPA's Manufacturers Operations Division not more than 15 working days after an emission-related defect is found to affect 25 engines in a given engine family manufactured in the same certificate or model year. Information required by paragraph (d) of this section that is either not available within 15 working days or is significantly revised must be submitted to EPA's Manufacturers Operations Division as it becomes available.

(d) Each defect report must contain the following information in substantially the format outlined below:

(1) The manufacturer's corporate name.

(2) A description of the defect.

(3) A description of each class or category of engines potentially affected by the defect including make, model, model year, calendar year produced, and any other information required to identify the engines affected.

(4) For each class or category of engine described in response to paragraph (d)(3) of this section, the following must also be provided:

(i) The number of engines known or estimated to have the defect and an explanation of the means by which this number was determined.

(ii) The address of the plant(s) at which the potentially defective engines were produced.

(5) An evaluation of the emissions impact of the defect and a description of any operational problems which a defective engine might exhibit.

(6) Available emission data which relate to the defect.

(7) An indication of any anticipated manufacturer follow-up.

§ 90.804 Voluntary emissions recall.

(a) When any manufacturer initiates a voluntary emissions recall campaign involving 25 or more engines, the manufacturer must submit a report describing the manufacturer's voluntary emissions recall plan as prescribed by this section within 15 working days of the date owner notification was begun. The report must contain the following:

(1) A description of each class or category of engines recalled including the number of engines to be recalled, the model year, the make, the model, and such other information as may be required to identify the engines recalled;

(2) A description of the specific modifications, alterations, repairs, corrections, adjustments, or other changes to be made to correct the engines affected by the emission-related defect;

(3) A description of the method by which the manufacturer will notify engine owners and, if applicable, the method by which the manufacturer will determine the names and addresses of engine owners;

(4) A description of the proper maintenance or use, if any, upon which the manufacturer conditions eligibility for repair under the recall plan, an explanation of the manufacturer's reasons for imposing any such conditions, and a description of the proof to be required of an engine owner to demonstrate compliance with any such conditions;

(5) A description of the procedure to be followed by engine owners to obtain correction of the nonconformity. This may include designation of the date on or after which the owner can have the nonconformity remedied, the time reasonably necessary to perform the labor to remedy the defect, and the designation of facilities at which the defect can be remedied;

(6) A description of the class of persons other than dealers and authorized warranty agents of the manufacturer who will remedy the defect;

(7) When applicable, three copies of any letters of notification to be sent engine owners;

(8) A description of the system by which the manufacturer will assure that an adequate supply of parts is available to perform the repair under the plan, and that the supply remains both adequate and responsive to owner demand;

(9) Three copies of all necessary instructions to be sent to those persons who are to perform the repair under the recall plan;

(10) A description of the impact of the proposed changes on fuel consumption, performance, and safety of each class or category of engines to be recalled;

(11) A sample of any label to be applied to engines which participated in the voluntary recall campaign.

(b) The manufacturer must submit at least one report on the progress of the recall campaign. Such report must be submitted no later than 18 months from the date notification was begun and include the following information:

(1) The methods used to notify both engine owners, dealers and other individuals involved in the recall campaign;

(2) The number of engines known or estimated to be affected by the emission-related defect and an explanation of the means by which this number was determined;

(3) The number of engines actually receiving repair under the plan; and

(4) The number of engines determined to be ineligible for remedial action due to a failure to properly maintain or use such engines.

§ 90.805 Reports, voluntary recall plan filing, record retention.

(a) Send the defect report, voluntary recall plan, and the voluntary recall progress report to: Director, Manufacturers Operations Division, Environmental Protection Agency, 401 M St. S.W., Washington, D.C. 20460.

(b) Retain the information gathered by the manufacturer to compile the reports for not less than five years from the date of the manufacture of the engines. The manufacturer must make this information available to duly authorized officials of the EPA upon request.

§ 90.806 Responsibility under other legal provisions preserved.

The filing of any report under the provisions of this subpart does not affect a manufacturer's responsibility to file reports or applications, obtain approval, or give notice under any provision of law.

§ 90.807 Disclaimer of production warranty applicability.

(a) The act of filing an Emission Defect Information Report is inconclusive as to the existence of a defect subject to the warranty provided by subpart L of this part.

(b) A manufacturer may include on each page of its Emission Defect Information Report a disclaimer stating that the filing of a Defect Information Report pursuant to these regulations is not conclusive as to the applicability of the warranty provided by subpart L of this part.

Subpart J—Exclusion and Exemption of Nonroad Engines from Regulations

§ 90.901 Applicability.

The requirements of subpart J are applicable to all nonroad engines and vehicles subject to the provisions of subpart A of part 90.

§ 90.902 Definitions.

The definitions in subpart A of this part apply to this subpart. The following definitions also apply to this subpart:

Exemption means exemption from the prohibitions of § 90.1003.

Export exemption means an exemption granted under § 90.1004(b) for the purpose of exporting new nonroad engines.

National security exemption means an exemption granted under § 90.1004(b) for the purpose of national security.

Manufacturer-owned nonroad engine means an uncertified nonroad engine owned and controlled by a nonroad engine manufacturer and used in a manner not involving lease or sale by itself or in a vehicle employed from year to year in the ordinary course of business for product development, production method assessment, and market promotion purposes.

Testing exemption means an exemption granted under § 90.1004(b) for the purpose of research, investigations, studies, demonstrations or training, but not including national security.

§ 90.903 Exclusions, application of section 216(10) of the Act.

(a) For the purpose of determining the applicability of section 216(10) of the Act, an internal combustion engine (including the fuel system) that is not used in a motor vehicle is deemed a nonroad engine, if it meets the definition in subpart A of this part. For the purpose of determining the applicability of section 216(11) of the Act, a vehicle powered by a nonroad engine is deemed a nonroad vehicle, if it meets the definition in subpart A of this part. Nonroad engines and nonroad vehicles do not include features ordinarily associated with military combat such as armor and/or weaponry.

(b) EPA will maintain a list of nonroad engines that have been determined to be excluded because they are used solely for competition or for combat. This list will be available to the public and may be obtained by writing to the following address: Chief, Manufacturers Programs Branch, Manufacturers Operations Division (6405–J), Environmental Protection Agency, 401 M Street, S.W., Washington, D.C. 20460.

(c) Upon written request, EPA will make written determinations as to whether certain engines are or are not nonroad engines. Engines that are determined not to be nonroad engines are excluded from regulations under this part.

§ 90.904 Who may request an exemption.

(a) Any person may request a testing exemption under § 90.905.

(b) Any nonroad engine manufacturer may request a national security exemption under § 90.908.

(c) For nonroad engine manufacturers, nonroad engines manufactured for export purposes are exempt without application, subject to the provisions of § 90.909.

(d) For eligible manufacturers, as determined by § 90.906, manufacturer-owned nonroad engines are exempt without application, subject to the provisions of § 90.906.

(e) For any person, display nonroad engines are exempt without application, subject to the provisions of § 90.907.

§ 90.905 Testing exemption.

(a) Any person requesting a testing exemption must demonstrate the following:

(1) That the proposed test program has a purpose which constitutes an appropriate basis for an exemption in accordance with § 90.1004(b), and in accordance with subsection (b) of this section;

(2) That the proposed test program necessitates the granting of an exemption, in accordance with subsection (c) of this section;

(3) That the proposed test program exhibits reasonableness in scope, in accordance with subsection (d) of this section; and

(4) That the proposed test program exhibits a degree of control consonant with the purpose of the program and EPA's monitoring requirements, in accordance with subsection (e) of this section.

(b) With respect to the purpose of the proposed test program, an appropriate purpose would be research, investigations, studies, demonstrations, or training, but not national security. A concise statement of purpose is a required item of information.

(c) With respect to the necessity that an exemption be granted, necessity arises from an inability to achieve the stated purpose in a practicable manner without performing or causing to be performed one or more of the prohibited acts under § 90.1003. In appropriate circumstances, time constraints may be a sufficient basis for necessity, but the cost of certification alone, in the absence of extraordinary circumstances, is not a basis for necessity.

(d) With respect to reasonableness, a test program must exhibit a duration of reasonable length and affect a reasonable number of engines. In this regard, required items of information include:

(1) An estimate of the program's duration; and

(2) The maximum number of nonroad engines involved.

(e) With respect to control, the test program must incorporate procedures consistent with the purpose of the test and be capable of affording EPA monitoring capability. As a minimum, required items of information include:

(1) The technical nature of the test;

(2) The site of the test;

(3) The duration and accumulated engine operation associated with the test;

(4) The ownership arrangement with regard to the engines involved in the test;

(5) The intended final disposition of the engines;

(6) The manner in which the engines used in the test will be identified, and that identification recorded, and made available; and

(7) The means or procedure whereby test results will be recorded.

(f) A manufacturer of new nonroad engines may request a testing exemption to cover nonroad engines intended for use in test programs planned or anticipated over the course of a subsequent one-year period. Unless otherwise required by the Director, Manufacturers Operations Division, a manufacturer requesting such an exemption need only furnish the information required by paragraphs (a)(1) and (d)(2) of this section along with a description of the recordkeeping and control procedures that will be employed to assure that the engines are used for purposes consistent with § 90.1004(b).

§ 90.906 Manufacturer-owned exemption and precertification exemption.

(a) Except as provided in paragraph (b) of this section, any manufacturer-owned nonroad engine, as defined by § 90.902, is exempt from § 90.1003, without application, if the manufacturer complies with the following terms and conditions:

(1) The manufacturer must establish, maintain, and retain the following adequately organized and indexed information on each exempted engine:

(i) Engine identification number;

(ii) Use of the engine on exempt status; and

(iii) Final disposition of any engine removed from exempt status.

(2) The manufacturer must provide right of entry and access to these records to EPA authorized representatives as required by § 90.506.

(3) Unless the requirement is waived or an alternative procedure is approved by the Director, Manufacturers Operations Division, the manufacturer must permanently affix a label to each nonroad engine on exempt status. This label should:

(i) Be affixed in a readily visible portion of the engine;

(ii) Be attached in such a manner that it cannot be removed without destruction or defacement;

(iii) State in the English language and in block letters and numerals of a color that contrasts with the background of the label, the following information:

(A) The label heading ''Emission Control Information;''

(B) Full corporate name and trademark of manufacturer;

(C) Engine displacement, engine family identification, and model year of engine; or person or office to be contacted for further information about the engine;

(D) The statement ''This nonroad engine is exempt from the prohibitions of 40 CFR 90.1003.''

(4) No provision of paragraph (a)(3) of this section prevents a manufacturer from including any other information it desires on the label.

§ 90.907 Display exemption.

Where an uncertified nonroad engine is a display engine to be used solely for display purposes, will only be operated incident and necessary to the display purpose, and will not be sold unless an applicable certificate of conformity has been received or the engine has been finally admitted pursuant to subpart G of this part, no request for exemption of the engine is necessary.

§ 90.908 National security exemption.

A manufacturer requesting a national security exemption must state the purpose for which the exemption is required and the request must be endorsed by an agency of the federal government charged with responsibility for national defense.

§ 90.909 Export exemptions.

(a) A new nonroad engine intended solely for export, and so labeled or tagged on the outside of the container and on the engine itself, is subject to the provisions of § 90.1003, unless the importing country has new nonroad engine emission standards which differ from EPA standards.

(b) For the purpose of paragraph (a) of this section, a country having no standards, whatsoever, is deemed to be a country having emission standards which differ from EPA standards.

(c) EPA will maintain a list of foreign countries that have in force nonroad emission standards identical to U.S. EPA standards and have so notified EPA. This list may be obtained by writing to the following address: Chief, Manufacturers Programs Branch, Manufacturers Operations Division (6405–J), Environmental Protection Agency, 401 M Street, S.W., Washington, D.C. 20460. New nonroad engines exported to such countries must comply with U.S. EPA certification regulations.

(d) It is a condition of any exemption for the purpose of export under § 90.1004(b) that such exemption be void ab initio with respect to a new nonroad engine intended solely for

export if such nonroad engine is sold, or offered for sale, to an ultimate purchaser in the United States for purposes other than export.

§ 90.910 Granting of exemptions.

(a) If upon completion of the review of an exemption request made pursuant to § 90.905 or § 90.908, EPA determines it is appropriate to grant such an exemption, a memorandum of exemption is to be prepared and submitted to the person requesting the exemption. The memorandum is to set forth the basis for the exemption, its scope, and such terms and conditions as are deemed necessary. Such terms and conditions generally include, but are not limited to, agreements by the applicant to conduct the exempt activity in the manner described to EPA, create and maintain adequate records accessible to EPA at reasonable times, employ labels for the exempt engines setting forth the nature of the exemption, take appropriate measures to assure that the terms of the exemption are met, and advise EPA of the termination of the activity and the ultimate disposition of the engines.

(b) Any exemption granted pursuant to paragraph (a) of this section is deemed to cover any subject engine only to the extent that the specified terms and conditions are complied with. A breach of any term or condition causes the exemption to be void ab initio with respect to any engine. Consequently, the causing or the performing of an act prohibited under § 90.1003(a) (1) or (3), other than in strict conformity with all terms and conditions of this exemption, renders the person to whom the exemption is granted, and any other person to whom the provisions of § 90.1003 are applicable, liable to suit under sections 204 and 205 of the Act.

§ 90.911 Submission of exemption requests.

Requests for exemption or further information concerning exemptions and/or the exemption request review procedure should be addressed to: Chief, Manufacturers Programs Branch, Manufacturers Operations Division (6405–J), Environmental Protection Agency, 401 M Street, SW., Washington, DC 20460.

§ 90.912 Treatment of confidential information.

The provisions for treatment of confidential information described in § 90.4 apply to this subpart.

Subpart K—Prohibited Acts and General Enforcement Provisions

§ 90.1001 Applicability.

The requirements of subpart K are applicable to all nonroad engines and vehicles subject to the provisions of subpart A of part 90.

§ 90.1002 Definitions.

The definitions in subpart A of this part apply to this subpart. All terms not defined herein or in subpart A have the meaning given them in the Act.

§ 90.1003 Prohibited acts.

(a) The following acts and the causing thereof are prohibited:

(1)(i) In the case of a manufacturer of new nonroad engines or vehicles for distribution in commerce, the sale, the offering for sale, or the introduction, or delivery for introduction, into commerce, of any new nonroad engine manufactured after the applicable effective date under this part unless such engine is covered by a certificate of conformity issued (and in effect) under regulations found in this part.

(ii) In the case of any person, except as provided by regulation of the Administrator, the importation into the United States of any new nonroad engine manufactured after the applicable effective date under this part unless such engine is covered by a certificate of conformity issued (and in effect) under regulations found in this part.

(2)(i) For a person to fail or refuse to permit access to or copying of records or to fail to make reports or provide information required under § 90.1004.

(ii) For a person to fail or refuse to permit entry, testing or inspection authorized under §§ 90.126, 90.506 or 90.1004.

(iii) For a person to fail or refuse to perform tests, or to have tests performed as required under §§ 90.119, 90.504 or 90.1004.

(iv) For a person to fail to establish or maintain records as required under § 90.1004.

(3)(i) For a person to remove or render inoperative a device or element of design installed on or in a nonroad engine in compliance with regulations under this part prior to its sale and delivery to the ultimate purchaser, or for a person knowingly to remove or render inoperative such a device or element of design after the sale and delivery to the ultimate purchaser; or

(ii) For a person to manufacture, sell or offer to sell, or install, a part or component intended for use with, or as part of, a nonroad engine, where a principal effect of the part or component is to bypass, defeat, or render inoperative a device or element of design installed on or in a nonroad engine in compliance with regulations issued under this part, and where the person knows or should know that the part or component is being offered for sale or installed for this use or put to such use.

(4) For a manufacturer of a new nonroad engine subject to standards prescribed under this part:

(i) To sell, offer for sale, or introduce or deliver into commerce, a nonroad engine unless the manufacturer has complied with the requirements of § 90.1102.

(ii) To sell, offer for sale, or introduce or deliver into commerce, a nonroad engine unless a label or tag is affixed to the engine in accordance with regulations under this part.

(iii) To provide directly or indirectly in any communication to the ultimate purchaser or a subsequent purchaser that the coverage of a warranty under the Act is conditioned upon use of a part, component, or system manufactured by the manufacturer or a person acting for the manufacturer or under its control, or conditioned upon service performed by such persons, except as provided in subpart L of this part.

(iv) To fail or refuse to comply with the terms and conditions of the warranty under subpart L of this part.

(5) For a manufacturer of new nonroad vehicles to distribute in commerce, sell, offer for sale, or introduce into commerce, nonroad vehicles which contain an engine not covered by a certificate of conformity (except as specified in paragraph (b)(4) of this section) or which contain a handheld engine in a nonhandheld vehicle.

(6) For a person to circumvent or attempt to circumvent the residence time requirements of Paragraph (a)(2)(iii) of this Section of the nonroad engine definition in § 90.3.

(b) For the purposes of enforcement of this part, the following apply:

(1) Nothing in paragraph (a) of this section is to be construed to require the use of manufacturer parts in maintaining or repairing a nonroad engine.

(2) Actions for the purpose of repair or replacement of a device or element of design or any other item are not considered prohibited acts under § 90.1003(a) if the actions are a necessary and temporary procedure, the device or element is replaced upon completion of the procedure, and the action results in the proper functioning of the device or element of design.

(3) Actions for the purpose of a conversion of a nonroad engine for use of a clean alternative fuel (as defined in Title II of the Act) are not considered prohibited acts under § 90.1003(a) if:

(i) The vehicle complies with the applicable standard when operating on the alternative fuel, and the device or element is replaced upon completion of the conversion procedure, and

(ii) In the case of engines converted to dual fuel or flexible use, the action results in proper functioning of the device or element when the nonroad engine operates on conventional fuel.

(4) Certified nonroad engines shall be used in all vehicles that are self-propelled, portable, transportable, or are intended to be propelled while performing their function unless the manufacturer of the vehicle can prove that the vehicle will be used in a manner consistent with paragraph (2) of the definition of nonroad engine in § 90.3 of this part. Nonroad vehicle manufacturers may continue to use noncertified nonroad engines built prior to the effective date until noncertified engine inventories are depleted; however, stockpiling (i.e., build up of an inventory of engines outside of normal business practices) of noncertified nonroad engines will be considered a violation of this section.

§ 90.1004 General enforcement provisions.

(a) *Information collection provisions.* (1) Every manufacturer of new nonroad engines and other persons subject to the requirements of this part must establish and maintain records, perform tests where such testing is not otherwise reasonably available under this part, make reports and provide information the Administrator may reasonably require to determine whether the manufacturer or other person has acted or is acting in compliance with this part or to otherwise carry out the provisions of this part, and must, upon request of an officer or employee duly designated by the Administrator, permit the officer or employee at reasonable times to have access to and copy such records. The manufacturer shall comply in all respects with the requirements of subpart I of this part.

(2) For purposes of enforcement of this part, an officer or employee duly designated by the Administrator, upon presenting appropriate credentials, is authorized:

(i) To enter, at reasonable times, any establishment of the manufacturer, or of any person whom the manufacturer engaged to perform any activity required under paragraph (a)(1) of this section, for the purposes of inspecting or observing any activity conducted pursuant to paragraph (a)(1) of this section; and

(ii) To inspect records, files, papers, processes, controls, and facilities used in performing an activity required by paragraph (a)(1) of this section, by the manufacturer or by a person whom the manufacturer engaged to perform the activity.

(b) *Exemption provision.* The Administrator may exempt a new nonroad engine from § 90.1003 upon such terms and conditions as the Administrator may find necessary for the purpose of export, research, investigations, studies, demonstrations, or training, or for reasons of national security.

(c) *Importation provision.* (1) A new nonroad engine or vehicle offered for importation or imported by a person in violation of § 90.1003 is to be refused admission into the United States, but the Secretary of the Treasury and the Administrator may, by joint regulation, provide for deferring a final determination as to admission and authorizing the delivery of such a nonroad engine offered for import to the owner or consignee thereof upon such terms and conditions (including the furnishing of a bond) as may appear to them appropriate to insure that the nonroad engine will be brought into conformity with the standards, requirements, and limitations applicable to it under this part.

(2) If a nonroad engine is finally refused admission under this paragraph, the Secretary of the Treasury shall cause disposition thereof in accordance with the customs laws unless it is exported, under regulations prescribed by the Secretary, within 90 days of the date of notice of the refusal or additional time as may be permitted pursuant to the regulations.

(3) Disposition in accordance with the customs laws may not be made in such manner as may result, directly or indirectly, in the sale, to the ultimate purchaser, of a new nonroad engine that fails to comply with applicable standards of the Administrator under this part.

(d) *Export provision.* A new nonroad engine intended solely for export, and so labeled or tagged on the outside of the container and on the engine itself, shall be subject to the provisions of § 90.1003, except that if the country that is to receive the engine has emission standards that differ from the standards prescribed under subpart B of this part, then the engine must comply with the standards of the country that is to receive the engine.

§ 90.1005 Injunction proceedings for prohibited acts.

(a) The district courts of the United States have jurisdiction to restrain violations of § 90.1003.

(b) Actions to restrain such violations must be brought by and in the name of the United States. In an action, subpoenas for witnesses who are required to attend a district court in any district may run into any other district.

§ 90.1006 Penalties.

(a) *Violations.* A violation of the requirements of this subpart is a violation of the applicable provisions of the Act and is subject to the penalty provisions thereunder.

(1) A person who violates § 90.1003(a)(1), (a)(4), or (a)(5), or a manufacturer or dealer who violates § 90.1003(a)(3)(i), is subject to a civil penalty of not more than $25,000 for each violation.

(2) A person other than a manufacturer or dealer who violates § 90.1003(a)(3)(i) or any person who violates § 90.1003(a)(3)(ii) is subject to a civil penalty of not more than $2,500 for each violation.

(3) A violation with respect to § 90.1003(a)(1), (a)(3)(i), (a)(4), or (a)(5) constitutes a separate offense with respect to each nonroad engine.

(4) A violation with respect to § 90.1003(a)(3)(ii) constitutes a separate offense with respect to each part or component. Each day of a violation with respect to § 90.1003(a)(6) constitutes a separate offense.

(5) A person who violates § 90.1003(a)(2) or (a)(6) is subject to a civil penalty of not more than $25,000 per day of violation.

(b) *Civil actions.* The Administrator may commence a civil action to assess and recover any civil penalty under paragraph (a) of this section.

(1) An action under this paragraph may be brought in the district court of the United States for the district in which the violation is alleged to have occurred, the defendant resides, or the Administrator's principal place of business is located, and in which the court has jurisdiction to assess a civil penalty.

(2) In determining the amount of a civil penalty to be assessed under this paragraph, the court is to take into account the gravity of the violation, the economic benefit or savings (if any) resulting from the violation, the size of the violator's business, the violator's history of compliance with Title II of the Act, action taken to remedy the violation, the effect of the penalty on the violator's ability to continue in

business, and such other matters as justice may require.

(3) In any such action, subpoenas for witnesses who are required to attend a district court in any district may run into any other district.

(c) *Administrative assessment of certain penalties.* (1) *Administrative penalty authority.* In lieu of commencing a civil action under paragraph (b) of this section, the Administrator shall assess any civil penalty prescribed in paragraph (a) of this section, except that the maximum amount of penalty sought against each violator in a penalty assessment proceeding can not exceed $200,000, unless the Administrator and the Attorney General jointly determine that a matter involving a larger penalty amount is appropriate for administrative penalty assessment. Any such determination by the Administrator and the Attorney General is not subject to judicial review. Assessment of a civil penalty is made by an order made on the record after opportunity for a hearing held in accordance with the procedures found at part 22 of this chapter. The Administrator may compromise, or remit, with or without conditions, any administrative penalty which may be imposed under this section.

(2) *Determining amount.* In determining the amount of any civil penalty assessed under this subsection, the Administrator is to take into account the gravity of the violation, the economic benefit or savings (if any) resulting from the violation, the size of the violator's business, the violator's history of compliance with Title II of the Act, action taken to remedy the violation, the effect of the penalty on the violator's ability to continue in business, and such other matters as justice may require.

(3) *Effect of administrator's action.* (i) Action by the Administrator under this paragraph does not affect or limit the Administrator's authority to enforce any provisions of this part; except that any violation with respect to which the Administrator has commenced and is diligently prosecuting an action under this part, or for which the Administrator has issued a final order not subject to further judicial review and for which the violator has paid a penalty assessment under this part may not be the subject of a civil penalty action under paragraph (b) of this section.

(ii) No action by the Administrator under this part affects a person's obligation to comply with a section of this part.

(4) *Finality of order.* An order issued under this part becomes final 30 days after its issuance unless a petition for judicial review is filed under paragraph (c)(5) of this section.

(5) *Judicial review.* (i) A person against whom a civil penalty is assessed in accordance with this part may seek review of the assessment in the United States District Court for the District of Columbia or for the district in which the violation is alleged to have occurred, in which such person resides, or where the person's principle place of business is located, within the 30-day period beginning on the date a civil penalty order is issued. The person must simultaneously send a copy of the filing by certified mail to the Administrator and the Attorney General.

(ii) The Administrator must file in the court within 30 days a certified copy, or certified index, as appropriate, of the record on which the order was issued. The court is not to set aside or remand any order issued in accordance with the requirements of this paragraph unless substantial evidence does not exist in the record, taken as a whole, to support the finding of a violation or unless the Administrator's assessment of the penalty constitutes an abuse of discretion, and the court is not to impose additional civil penalties unless the Administrator's assessment of the penalty constitutes an abuse of discretion. In any proceedings, the United States may seek to recover civil penalties assessed under this section.

(6) *Collection.* (i) If any person fails to pay an assessment of a civil penalty imposed by the Administrator as provided in this part after the order making the assessment has become final or after a court in an action brought under paragraph (c)(5) of this section has entered a final judgment in favor of the Administrator, the Administrator is to request that the Attorney General bring a civil action in an appropriate district court to recover the amount assessed (plus interest at rates established pursuant to section 6621(a)(2) of the Internal Revenue Code of 1986 from the date of the final order or the date of final judgment, as the case may be). In such an action, the validity, amount, and appropriateness of the penalty are not subject to review.

(ii) A person who fails to pay on a timely basis the amount of an assessment of a civil penalty as described in paragraph (c)(6)(i) of this section is required to pay, in addition to that amount and interest, the United States' enforcement expenses, including attorney's fees and costs for collection proceedings, and a quarterly nonpayment penalty for each quarter during which the failure to pay persists. The nonpayment penalty is an amount equal to 10 percent of the aggregate amount of that person's penalties and nonpayment penalties which are unpaid as of the beginning of such quarter.

Subpart L—Emission Warranty and Maintenance Instructions

§ 90.1101 Applicability.

The requirements of subpart L are applicable to all nonroad engines and vehicles subject to the provisions of subpart A of part 90.

§ 90.1102 Definitions.

The definitions of subpart A of this part apply to this subpart.

§ 90.1103 Emission warranty, warranty period.

(a) Warranties imposed by this subpart shall be for the first two years of engine use from the date of sale to the ultimate purchaser.

(b) The manufacturer of each new nonroad engine must warrant to the ultimate purchaser and each subsequent purchaser that the engine is designed, built, and equipped so as to conform at the time of sale with applicable regulations under section 213 of the Act, and the engine is free from defects in materials and workmanship which cause such engine to fail to conform with applicable regulations for its warranty period.

(c) In the case of a nonroad engine part, the manufacturer or rebuilder of the part may certify according to § 85.2112 of this chapter that use of the part will not result in a failure of the engine to comply with emission standards promulgated in this part.

(d) For the purposes of this section, the owner of any nonroad engine warranted under this part is responsible for the proper maintenance of the engine as stated in the manufacturer's written instructions. Proper maintenance generally includes replacement and service, at the owner's expense at a service establishment or facility of the owner's choosing, such items as spark plugs, points, condensers, and any other part, item, or device related to emission control (but not designed for emission control) under the terms of the last sentence of section 207(a)(3) of the Act, unless such part, item, or device is covered by any warranty not mandated by this Act.

§ 90.1104 Furnishing of maintenance instructions to ultimate purchaser.

(a) The manufacturer must furnish or cause to be furnished to the ultimate purchaser of each new nonroad engine written instructions for the maintenance needed to assure proper functioning of the emission control system.

(b) The manufacturer must provide in boldface type on the first page of the written maintenance instructions notice that maintenance, replacement, or repair of the emission control devices and systems may be performed by any nonroad engine repair establishment or individual.

(c) The instructions under paragraph (b) of this section will not include any condition on the ultimate purchaser's using, in connection with such engine, any component or service (other than a component or service provided without charge under the terms of the purchase agreement) which is identified by brand, trade, or corporate name. Such instructions also will not directly or indirectly distinguish between service performed by the franchised dealers of such manufacturer or any other service establishments with which such manufacturer has a commercial relationship and service performed by independent nonroad engine repair facilities with which such manufacturer has no commercial relationship.

(d) The prohibition of paragraph (c) of this section may be waived by the Administrator if:

(1) The manufacturer satisfies the Administrator that the engine will function properly only if the component or service so identified is used in connection with such engine; and

(2) The Administrator finds that such a waiver is in the public interest.

[FR Doc. 95–14221 Filed 6–30–95; 8:45 am]

BILLING CODE 6560–50–P