UNITED STATES DISTRICT COURT

DISTRICT OF MINNESOTA

		Civil Action Number:
UNITED STATES, PLAINTIFF, and the	))	
STATE OF MINNESOTA, BY ITS MINNESOTA POLLUTION CONTROL AGENCY, Plaintiff-Intervenor,	))))	CONSENT DECREE
v.	)	
DIVERSIFIED ENERGY COMPANY, Defendant.	))	

TABLE OF CONTENTS

I. JURISDICTION AND VENUE 3

II. APPLICABILITY 3

III. FACTUAL BACKGROUND 4

IV. COMPLIANCE PROGRAM SUMMARY 5

V. COMPLIANCE PROGRAM 8

A. Installation Of Controls 8

B. Permitting and Modifications 10

C. Emission Limits 12

D. Demonstration of Compliance 15

E. Recordkeeping and Recording 16

VI. CIVIL PENALTY 17

VII. STIPULATED PENALTIES 19

VIII RIGHT OF ENTRY 21

IX. FORCE MAJEURE 22

X. DISPUTE RESOLUTION 24

XI. GENERAL PROVISIONS 26

XII. TERMINATION 31

CONSENT DECREE

WHEREAS, Plaintiff, the United States of America (hereinafter "Plaintiff" or "the United States"), on behalf of the United States Environmental Protection Agency (herein, "EPA"), has, simultaneously with lodging of this Consent Decree, filed a Complaint alleging that Defendant, Diversified Energy Company (herein, "DENCO" or "Defendant") commenced construction of a major emitting facility and major modifications of a major emitting facility in violation of the Prevention of Significant Deterioration ("PSD") requirements at Part C of the Clean Air Act (the "Act"), 42 U.S.C. §§ 7470-7492, and the regulations promulgated thereunder at 40 C.F.R. § 52.21 (the "PSD Rules");

WHEREAS, Plaintiff further alleged that Defendant commenced construction of an emitting facility or modified an emitting facility without first obtaining the appropriate preconstruction permits and installing the appropriate air pollution control equipment required by 40 C.F.R. § 52.21 and the Minnesota State Implementation Plan ("SIP") approved pursuant to 42 U.S.C. § 7410;

WHEREAS, Plaintiff further alleged that potential air emissions from the Defendant's facility were underestimated;

WHEREAS, the State of Minnesota, through the Minnesota Pollution Control Agency ("MPCA" or "Plaintiff-Intervenor"), has, simultaneously with lodging of this Consent Decree, filed a Complaint in Intervention, alleging that DENCO was and is in violation of the Minnesota SIP, by failing to obtain the appropriate pre-construction permits, by failing to accurately report emissions increases, and by failing to install appropriate pollution control technology, in violation of applicable state laws, including Minnesota Rule ("Minn. R.") 7007.3000;

WHEREAS, in 1998, three hundred forty-five (345) farm families and local investors in the Morris area in west central Minnesota organized themselves to buy a small privately-owned ethanol plant, expand its size and operate as a limited liability company;

WHEREAS, in 1999, the expansion was completed and ethanol production began in 1999;

WHEREAS, DENCO is a small facility that has produced ethanol in the following quantities:

- 1999 1.70 million gallons
- 2000 16.23 million gallons
- 2001 17.48 million gallons;

WHEREAS, in September, DENCO's Board of Directors voted to spend approximately $100,000 to install a wet cake system;

WHEREAS, the wet cake system was completed in March, 2001;

WHEREAS, on February 7, 2002, the MPCA met with representatives of the ethanol plants in Minnesota, including DENCO, to discuss VOC test results, VOC emissions, and related compliance issues;

WHEREAS, on April 30, 2002, DENCO executed a letter of commitment to negotiate with EPA and MPCA for the installation of controls on its plant to address the possible exceedance of air quality limits;

WHEREAS, DENCO has worked cooperatively with EPA and MPCA regarding the alleged violations and voluntarily provided requested information without information requests under Section 114 of the Act, 42 U.S.C. § 7414;

WHEREAS, the Defendant does not admit the violations alleged in the Complaints;

WHEREAS, the United States and Plaintiff-Intervenor (collectively "Plaintiffs"), and the Defendant have agreed that settlement of this action is in the best interest of the parties and in the public interest, and that entry of this Consent Decree without further litigation is the most appropriate means of resolving this matter; and

WHEREAS, Plaintiffs and the Defendant consent to entry of this Consent Decree without trial of any issues;

NOW, THEREFORE, without any admission of fact or law, and without any admission of the violations alleged in the Complaints, it is hereby ORDERED AND DECREED as follows:

I. JURISDICTION AND VENUE

1. The Complaints state a claim upon which relief can be granted against the Defendant under Sections 113 and 167 of the Act, 42 U.S.C. §§ 7413 and 7477, and 28 U.S.C. § 1355. This Court has jurisdiction of the subject matter herein and over the parties consenting hereto pursuant to 28 U.S.C. § 1345 and pursuant to Sections 113 and 167 of the Act, 42 U.S.C. §§ 7413 and 7477. Venue is proper under Section 113(b) of the Act, 42 U.S.C. § 7413(b), and under 28 U.S.C. § 1391(b) and (c).

II. APPLICABILITY

2. The provisions of this Consent Decree shall apply to and be binding upon the Plaintiffs and upon the Defendant as well as the Defendant's officers, employees, agents, successors and assigns. In the event Defendant proposes to sell or transfer its facility (i.e., a plant or mill) subject to this Consent Decree before termination of the Consent Decree, it shall advise such proposed purchaser or successor-in-interest in writing of the existence of this

Consent Decree, and shall send a copy of such written notification by certified mail, return receipt requested, to the EPA Regional Administrator for the region in which the facility is located before such sale or transfer, if possible, but no later than the closing date of such sale or transfer. The Defendant shall provide a copy of the Consent Decree and the Control Technology Plan required in Paragraph 15 of this Consent Decree to the proposed purchaser or successor-in-interest. In the event the Defendant sells or otherwise assigns any of its right, title, or interest in its facility, prior to termination of the Consent Decree, the conveyance shall not release the Defendant from any obligation imposed by this Consent Decree unless the party to whom the right, title or interest has been transferred agrees in writing to fulfill the obligations of this Consent Decree.

III. FACTUAL BACKGROUND AND APPLICABLE DEFINITIONS

3. (a) DENCO is a "person" as defined in Section 302(e) of the Act, 42 U.S.C. § 7602(e), and the federal and state regulations promulgated pursuant to the Act.

(b) DENCO owns and operates a plant in Morris, Minnesota, for the manufacture of ethanol. DENCO receives whole corn which is then milled, cooked, and fermented. After fermentation, the raw product is distilled to produce ethanol. Distillation separates the liquid ethanol from the corn meal, which DENCO may dry or sell as wet mash for animal feed. The Plaintiffs allege that in the course of these manufacturing activities significant quantities of particulate matter ("PM"), particulate matter at or below 10 microns ("PM_{10}"), carbon monoxide ("CO"), volatile organic compounds ("VOCs"), nitrogen oxides ("NOx") and other pollutants are generated, including hazardous air pollutants ("HAPs") listed under Section 112(b)(1), 42 U.S.C. § 7412(b)(1) of the Act. The primary sources of these emissions are the

feed dryers, fermentation units, gas boilers, cooling cyclones, ethanol truck load-out systems, and the fugitive dust emissions from the facility operations, including roads.

(c) Plaintiffs allege that DENCO's ethanol plant in Morris, Minnesota is a "major emitting facility," as defined by Section 169(1) of the Act, 42 U.S.C. § 7479(1), and the federal and state regulations promulgated pursuant to the Act.

(d) Definitions: Unless otherwise defined herein, terms used in this Consent Decree shall have the meaning given to those terms in the Act, and the federal and state regulations promulgated pursuant to the Act.

IV. COMPLIANCE PROGRAM SUMMARY

4. DENCO shall implement a program of compliance at its ethanol distillation facility to attain the emission levels required under this Consent Decree for VOC, PM, PM_{10}, CO, and NOx. DENCO's compliance program is summarized below in Paragraphs 5 through 10, and implemented through Paragraphs 15 through 17 and 26 through 28 of this Consent Decree.

5. DENCO shall implement a program to control and minimize fugitive particulate matter emissions from facility operations as set forth in the approved Control Technology Plan required under Part V of this Consent Decree and which is Attachment 1 to this Consent Decree.

6. DENCO shall demonstrate compliance with the required emission levels on a unit-by-unit basis as set forth in the approved Control Technology Plan.

7. DENCO shall demonstrate compliance with the emission limits established under this Consent Decree by the use of performance testing, parametric monitoring, recordkeeping

and reporting, or initial and periodic compliance testing, where appropriate, as set forth in the approved Control Technology Plan.

8. DENCO shall maintain records to demonstrate compliance with New Source Performance Standards ("NSPS"), Part 60, Subparts Dc, Kb, and VV, and its fugitive dust management program.

9. DENCO shall accept source-wide allowable emission caps equivalent to 95 tons per year ("TPY"), for each pollutant, for VOCs, PM, PM_{10}, sulfur dioxide ("SO_2"), NO_X, and CO based on a 12-month rolling sum, rolled monthly, and recorded monthly.

10. DENCO shall apply for a modification to its federally-enforceable operating permit to incorporate the 95 TPY allowable emission caps and the lower emission limits applicable to each unit as set forth in the approved Control Technology Plan.

11. DENCO shall obtain a federally-enforceable permit prior to beginning construction or operation of any future modification that will result in a significant net emission increase as defined by 40 C.F.R. Part 52, but will not exceed the 95 TPY allowable emission caps. The modifications required in Part V Section A ("Installation of Controls and Applicable Emission Limits") of this Consent Decree and any modification that qualifies under Minnesota Rule 7007.1250 and 7007.1450 subp. 2 are excluded from the requirements of this Paragraph. For purposes of determining whether a modification will result in a significant net emissions increase, DENCO shall use results from its initial compliance testing to determine its past actual emissions baseline. DENCO shall include in its application for the federally-enforceable permit, and MPCA shall propose to incorporate in the permit, the 95 TPY allowable emission caps or a schedule to meet the 95 TPY allowable emission caps and all emission limits, monitoring and

recordkeeping requirements as set forth in the approved Control Technology Plan and this Consent Decree, and DENCO shall not contest what is contained in its permit application.

12. If, as a result of any future modifications, prior to termination of the Consent Decree, the total limited potential emissions of VOCs. PM, PM_{10}, SO_2, NO_X and CO will exceed the 95 TPY allowable emission caps, then DENCO shall complete and submit for MPCA approval a source-wide PSD/NSR permit application that includes the approved Control Technology Plan requirements as set forth in this Consent Decree. To the extent that DENCO demonstrates, through results of compliance tests or evidence of operating conditions, that its facility has operated below the 95 TPY emission caps for 24 months, the facility shall be treated as a synthetic minor for air permitting requirements and permit requirements for future modifications will be governed by applicable state and federal regulations.

13. Except as provided in Paragraph 12, if as a result of any future modifications, prior to termination of the Consent Decree, the total limited potential emissions of VOCs, PM, PM_{10}, SO_2, NO_X and CO will exceed the 95 TPY allowable emission caps , then DENCO shall obtain a PSD/NSR permit prior to beginning construction of those modifications. Following termination of the Consent Decree, DENCO shall obtain necessary permits or permit amendments, as required under applicable state and federal regulations.

14. DENCO shall include in its application, and MPCA shall propose to incorporate, the emission limits, monitoring and recordkeeping requirements of the approved Control Technology Plan and this Consent Decree into any existing or new permit issued to the source as federally-enforceable Title I permit conditions and such emission limits, monitoring and recordkeeping requirements shall remain applicable to the source for the life of its operation or

until changed through a permit amendment. DENCO shall not contest what is contained in its permit application. Requirements under this Consent Decree excluded under this Paragraph as Title I conditions are NSPS Subparts Dc, Kb, and VV, and the fugitive emission control program referenced in Paragraphs 15(j) and (h), respectively. In addition, the Consent Decree shall be referenced in the permit as the legal basis for all applicable requirements created by the Consent Decree.

V. COMPLIANCE PROGRAM REQUIREMENTS

A. Installation Of Controls And Applicable Emission Limits

15. DENCO shall implement a plan for the installation of air pollution control technology ("Control Technology Plan") capable of meeting the following emission level reductions for the identified units in subparagraphs (a) through (k). DENCO's Control Technology Plan, which has been approved by Plaintiffs, is Attachment 1 to this Consent Decree:

(a) Feed Dryers: 95 percent reduction of VOC or emissions no higher than 10 parts per million ("PPM") of VOC, 90 percent reduction of CO emissions or emissions no higher than 100 PPM CO, and reduction of PM and PM_{10} based on operation of pollution control technology specified in the approved Control Technology Plan and as established after initial performance testing pursuant to Paragraph 24 of this Consent Decree. A NO_X emission factor shall be established after initial performance testing required pursuant to Paragraph 23 of this Consent Decree. The emission factor will be used to determine compliance with Paragraph 15(g). The following unit is subject to these limits: EU 066

(b) Fermentation Units: 95 percent reduction of VOC or if the inlet is less than 200 PPM of VOC, then 20 PPM or lower of VOC. The following units are subject to this limit: EU 016-065, EU 061-070

(c) Gas Boilers: Installation of low NOx burner on EU 059. A NOx emission factor shall be established after initial performance testing required pursuant to Paragraph 23 of this Consent Decree. The emission

factor will be used to determine compliance with Paragraph 15(g). The following units are subject to these limits: EU 001, EO 002, EU059

(d) Cooling Cyclones: VOC emission limit(s) shall be established after initial performance testing pursuant to Paragraph 22 of this Consent Decree. The following unit is subject to this limit: EU 071

(e) Fugitive Dust Control PM: A program shall be developed for minimization of fugitive dust emissions from facility operations. The following area is subject to this program: FS 001

(f) Ethanol Loadout:
Truck loadout: Design an enclosure for total capture of VOC and operate a closed loop system vented to a flare for destruction of the captured VOC.
Railcar loadout: All railcars shall be dedicated as ethanol only.
The following unit is subject to this limit: FS 004

(g) Additional Requirements for NOx Emission Units: Establish a Group NOx limit based on 0.04 lbs of NOx per unit, per MMBtu at capacity. An adjustment for propane usage may be made for a designated period of time based on a limit of 0.08 lbs of NOx per MMBtu. Emission factors for each unit in this group shall be established during the initial performance test required in Paragraph 23 of this Consent Decree and will be used to calculate compliance with the Group NOx limit, based on actual fuel usage for all emission units in this group. The fuel used by this group as a whole shall not allow NOx emissions in excess of 39.9 TPY. The following units are subject to this limit: EU 066, EU 001, EU 002, EU 059, CE 026

(h) Fugitive VOC: Implement and comply with the requirements of 40 C.F.R. Part 60, Subpart VV. The following unit is subject to these requirements: FS 005

(i) Additional Requirements for Hazardous Air Pollutants ("HAPs"): Beginning no later than 180 days following the start-up of the last piece of control equipment required in the approved Control Technology Plan, DENCO shall continually operate its facility so as not to exceed source-wide allowable emissions of 9.0 TPY for any single HAP or 24.0 TPY for all HAPs based on a 12-month rolling sum, rolled monthly, and recorded monthly. For the first eleven months, beginning no later than 180 days following start-up of the last piece of control equipment required in the approved Control Technology Plan, compliance with the 12-month rolling sum will be demonstrated based on the schedule to meet applicable emission caps as set forth in the approved Control

Technology Plan. If, based on emissions testing as set forth in the approved Control Technology Plan, additional control measures are required to meet the 9.0 or 24.0 TPY emission caps, such control measures shall be implemented and included in the operating permit application required under Paragraph 17.

(j) New Source Performance Standards (NSPS): Identify and implement applicable NSPS requirements codified at 40 C.F.R. Part 60. The following NSPS apply: NSPS subpart Dc (Small Industrial Commercial-Institutional Steam Generating Units less than 29 MW (100 million BTu/hour)); NSPS subpart Kb (Volatile Organic Liquid Storage Vessels); and NSPS subpart VV (Synthetic Organic Chemicals Manufacturing Industry Leak Detection, Monitoring and Repair Requirements).

(k) Alternative Control Technology/Operating Scenario: To the extent that an alternative control technology or operating scenario is chosen in accordance with the approved Control Technology Plan for which some of all of the above emission limits are not applicable, the applicable emission limits in the approved Control Technology Plan will control.

16. DENCO shall implement the approved Control Technology Plan in accordance with the schedule set forth in that plan. DENCO's approved Control Technology Plan is incorporated by reference herein and made directly enforceable by Plaintiffs under this Consent Decree.

B. Permitting And Modifications

17. Source-wide Permit: By no later than 180 days following the start-up of the last piece of control equipment required in the approved Control Technology Plan, DENCO shall apply for a modification to its federally-enforceable operating permit(s) to incorporate the 95 TPY source-wide allowable emission caps as described in Paragraph 9.

18. Future Modifications: Except as provided in Paragraph 12, for the effective period of the Consent Decree, DENCO shall obtain a federally-enforceable permit prior to beginning

construction or operation of any future modification that will result in a significant net emission increase as defined by 40 C.F.R. Part 52, but will not exceed the 95 TPY allowable emission caps. The modifications required in Part V Section A ("Installation of Controls and Applicable Emission Limits") and the approved Control Technology Plan of this Consent Decree and any modification that qualifies under Minnesota Rule 7007.1250 and 7007.1450 subp. 2 are excluded from the requirements of this Paragraph. This permit shall incorporate the 95 TPY allowable emission caps or a schedule to meet the 95 TPY allowable emission caps and emission limits, monitoring and recordkeeping requirements as set forth in the approved Control Technology Plan and this Consent Decree, including the requirements establishing the emission level reductions within the Control Technology Plan.

19. In determining whether a future modification will result in a significant net emissions increase, DENCO cannot take credit for any emission reductions resulting from the implementation of the approved Control Technology Plan for netting purposes as defined by 40 C.F.R. § 52.21(b)(3). In addition, the emission reductions of PM, PM_{10}, NOx, SO_2 and CO required under this Consent Decree and the applicable NSPS may not be used for any emissions offset, banking, selling or trading program. VOC emissions reductions up to 98 percent of the uncontrolled feed dryer emissions may not be used for any emissions offset, banking, selling or trading program.

20. Except as provided in Paragraph 12, DENCO shall obtain a PSD permit prior to beginning construction of any future modifications during the effective period of the Consent Decree that will cause any increase in its limited potential emissions of any pollutant regulated under the Act above the 95 TPY source-wide caps, or prior to relaxation of a federally-

enforceable permit limit pursuant to 40 C.F.R. § 52.21(r)(4).

C. Emission Limits

21. Unit Emission Limit for VOC, CO, NOx:

Beginning no later than 180 days following the start-up of each piece of control equipment required in its approved Control Technology Plan, DENCO shall continually operate each unit in accordance with the operating parameters set forth in the approved Control Technology Plan.

22. VOC Limit for Cooling Cyclone:

(a) By no later than 90 days following the initial performance test of the cooling cyclone as required in Paragraphs 15(d) and 28, DENCO shall submit a written evaluation of the technical feasibility and cost effectiveness of additional VOC control equipment for the cooling cyclone and the technical feasibility and cost effectiveness of either directly or indirectly routing the cooling cyclone emissions to feed dryer control equipment.

(1) If the evaluation demonstrates that additional controls or routing the emissions to the feed dryer control equipment are technically feasible and cost effective, a schedule to install the controls and interim VOC emission limit(s) to apply until controls are installed must be included in the evaluation.

(2) If DENCO concludes that additional controls are not technically feasible and cost effective, DENCO shall propose a VOC emission limit(s) based on the data collected from initial performance testing and other available pertinent information.

(b) DENCO shall immediately comply with the proposed VOC emission limit(s) or interim VOC emission limit(s).

(c) MPCA will use the data collected, the control equipment evaluation and other available pertinent information to establish a VOC emission limit(s) for the cooling cyclone and, if necessary, the required emissions control or to support a determination that additional controls are not technically feasible or cost-effective. MPCA shall provide written notice to DENCO of the established limit, or the additional required controls, and MPCA's notice shall be incorporated into and enforceable under this Consent Decree.

(1) If the limit established by the MPCA is more stringent than the limit proposed by DENCO, DENCO shall have 30 days from the date of the written notice to comply with the established limit(s).

(2) If MPCA determines that controls are required in addition to, or different from, those proposed by DENCO, DENCO shall have 30 days from the date of the written notice to provide MPCA with a schedule to install the controls. The MPCA shall allow DENCO a reasonable time to install the required controls. If DENCO contests the MPCA's proposed limit or MPCA's proposed controls, DENCO shall have 60 days to invoke the Dispute Resolution process pursuant to Part X ("Dispute Resolution") and obtain a stay from the Court. Until a limit is established under the Dispute Resolution process herein, DENCO shall comply with the emission limit(s) it proposed under Paragraph 22(a)(2).

23. NOx Emission Factors: Following the initial performance test as required in Paragraphs 15 (a), (c), and (g) and 28, DENCO shall establish unit specific NO_X emission factors that it will use to calculate actual NO_X emissions to demonstrate compliance with Paragraph 15(g). The method to determine compliance with the limit in Paragraph 15(g) is specified in the approved Control Technology Plan.

24. Unit Emission Limit for PM and PM_{10}: By no later than 45 days following the initial performance test of the control equipment for the feed dryer as required in Paragraphs 15(a) and 28, DENCO shall propose PM and PM_{10} emission limits based on the data collected from initial performance testing and other available pertinent information. DENCO shall immediately comply with the proposed emission limit. MPCA will use the data collected and other available pertinent information to establish limits for PM and PM_{10}. MPCA shall provide written notice to DENCO of the established limit and the established limit shall be incorporated into and enforceable under this Consent Decree. If DENCO contests the MPCA's proposed limit, DENCO shall have 60 days to invoke the Dispute Resolution process pursuant to Part X ("Dispute Resolution") and obtain a stay from the Court. Until a limit is established under the Dispute Resolution process herein, DENCO shall comply with the emission limit(s) it proposed under this Paragraph.

25. Unit Operating Permits: By no later than 180 days following start-up of the last piece of control equipment required in its approved Control Technology Plan, DENCO shall apply for modification to its federally-enforceable operating permit to incorporate the emission limits, monitoring parameters, and recordkeeping set forth in the approved Control Technology Plan and this Consent Decree.

26. Source-wide Caps:

(a) Beginning no later than 180 days following start-up of the last piece of control equipment required in its approved Control Technology Plan, DENCO shall continually operate its facility so as not to exceed the source-wide allowable emission caps of 95 TPY for each pollutant for VOCs, PM, PM_{10}, SO_2, NO_X, and CO based on a 12-month rolling sum, rolled

monthly, and recorded monthly. For the first eleven months, beginning no later than 180 days following start-up of the last piece of control equipment required in the approved Control Technology Plan, compliance with the 12-month rolling sum will be demonstrated based on a schedule to meet applicable emission caps as set forth in the approved Control Technology Plan. This provision shall survive termination of this Consent Decree until the 95 TPY emission caps are amended by or incorporated into a federally-enforceable permit for the facility.

(b) Beginning no later than 180 days following start-up of the last piece of control equipment required in its approved Control Technology Plan, DENCO shall continually operate its facility so as not to exceed the source-wide allowable emission caps of 9.0 TPY for any single hazardous air pollutant or 24.0 TPY for all hazardous air pollutants based on a 12-month rolling sum, rolled monthly, and recorded monthly. For the first eleven months, beginning no later than 180 days following start-up of the last piece of control equipment required in the approved Control Technology Plan, compliance with the 12-month rolling sum will be demonstrated based on a schedule to meet applicable emission caps as set forth in the approved Control Technology Plan. This provision shall survive termination of this Consent Decree until the 9.0 TPY and 24.0 TPY emission caps are amended by or incorporated into a federally-enforceable permit for the facility.

D. Demonstration Of Compliance

27. DENCO shall demonstrate continuous compliance with the emission limits established under this Consent Decree by the use of parametric monitoring, recordkeeping and reporting, as set forth in the approved Control Technology Plan.

28. By no later than 120 days following the start-up of the last piece of control equipment required in the approved Control Technology Plan, DENCO shall demonstrate through emissions testing of each emissions unit as specified in the approved Control Technology Plan, conducted in accordance with a MPCA and U.S. EPA approved test protocol, that it has met the required destruction efficiency and/or emission limit. DENCO shall follow all testing requirements in Minnesota Rule 7017. DENCO shall retest the dryer for VOCs, CO, PM, and PM_{10} no less than annually for the effective period of the Consent Decree. DENCO shall retest all other units in accordance with MPCA's policy regarding performance testing frequency.

29. DENCO shall maintain control technology performance criteria monitoring data and records as set forth in the approved Control Technology Plan, and shall make them available to the Plaintiffs upon demand as soon as practicable.

E. Recordkeeping And Reporting Requirements

30. Beginning with the first full calendar quarter following lodging of this Consent Decree, DENCO shall submit written reports within 30 days following each calendar quarter to MPCA and U.S. EPA that itemize Consent Decree requirements and the approved Control Technology Plan requirements, the applicable deadlines, the dates the tasks were completed, unit emissions data and data to support DENCO's compliance status with the terms of this Consent Decree. Reports shall be sent to the addresses identified in Paragraph 64 ("Notice"). Emissions data may be submitted in electronic format.

31. DENCO shall preserve and retain all records and documents now in its possession or control, or which come into its possession or control, that support the reporting and

compliance requirements under this Part for a period of three years following the termination of this Consent Decree, unless other regulations require the records to be maintained longer.

32. All notices, reports or any other submissions from DENCO shall contain the following certification and may be signed by an owner or operator of the company responsible for environmental management and compliance:

> "I certify under penalty of law that I have personally examined the information submitted herein and that I have made a diligent inquiry of those individuals immediately responsible for obtaining the information and that to the best of my knowledge and belief, the information submitted herewith is true, accurate, and complete. I am aware that there are significant penalties for submitting false information, including the possibility of fine and imprisonment."

VI. CIVIL PENALTY

33. Within thirty (30) calendar days of entry of this Consent Decree, the Defendant shall pay to the Plaintiffs a civil penalty pursuant to Section 113 of the Act, 42 U.S.C. § 7413 and Minn. Stat. § 115.071, in the amount of $34,975 (Thirty-Four Thousand Nine Hundred and Seventy-Five Dollars). Pursuant to the Act, the following factors were considered in determining a civil penalty, in addition to other factors as justice may require, the size of the business, the economic impact of the penalty on the business, the violator's full compliance history and good faith efforts to comply, the duration of the violation, payment by the violator of penalties previously assessed for the same violation, the economic benefit of noncompliance, and the seriousness of the violation.

34. Of the total penalty, $17,487.50, shall be paid to the United States by Electronic Funds Transfer ("EFT") to the United States Department of Justice, in accordance with current EFT procedures, referencing the USAO File Number and DOJ Case Number 90-5-2-1-07784,

and the civil action case name and case number of the District of Minnesota. The costs of such EFT shall be DENCO's responsibility. Payment shall be made in accordance with instructions provided to DENCO by the Financial Litigation Unit of the U.S. Attorney's Office in the District of Minnesota. Any funds received after 11:00 a.m. (EST) shall be credited on the next business day. DENCO shall provide notice of payment, referencing the USAO File Number and DOJ Case Number 90-5-2-1-07784, and the civil action case name and case number, to the Department of Justice and to EPA, as provided in Paragraph 64 ("Notice"). The total remaining amount, $17,487.50 in civil penalties, shall be paid to the Plaintiff-Intervenor the State of Minnesota. Of that amount, $12,487.50 shall be paid within thirty (30) calendar days of entry of this Consent Decree as a judgment of the Court. The remaining $5,000 will only be paid to the Plaintiff-Intervenor the State of Minnesota if DENCO decides not to utilize alternative technology as described in the approved Control Technology Plan. The $5,000 shall be paid within fourteen (14) days of the date of DENCO's written notice to the MPCA and EPA that DENCO will not utilize alternative technology. Payment to the Plaintiff-Intervenor the State of Minnesota shall be made in the form of a certified check payable to the Minnesota Pollution Control Agency and delivered to:

Enforcement Penalty Coordinator
Minnesota Pollution Control Agency
520 Lafayette Road
St. Paul, Minnesota 55155-4194

35. The Defendant shall pay statutory interest on any over due civil penalty or stipulated penalty amount at the rate specified in 31 U.S.C. § 3717. Upon entry of this Consent Decree, this Consent Decree shall constitute an enforceable judgment for purposes of post-judgment collection in accordance with Rule 69 of the Federal Rules of Civil Procedure, the

Federal Debt Collection Procedure Act, 28 U.S.C. § 3001-3308, Minnesota Statute Chapter 16D and other applicable federal and state Authority. The Plaintiffs shall be deemed a judgment creditor for purposes of collection of any unpaid amounts of the civil and stipulated penalties and interest.

36. No amount of the civil penalty to be paid by DENCO shall be used to reduce its federal or state tax obligations.

VII. STIPULATED PENALTIES

37. The Defendant shall pay stipulated penalties in the amounts set forth below to the Plaintiffs, to be paid 50 percent to the United States and 50 percent to the Plaintiff-Intervenor, for the following:

(a) for each day of failure to propose PM, PM_{10}, and VOC emissions limits under Paragraphs 22 and 24:

1st through 30th day after deadline	$ 250
31st through 60th day after deadline	$ 500
Beyond the 60th day	$1000

(b) for each day of failure to meet the deadlines for installation of control technology systems set forth in the Control Technology Plan and applying for, or obtaining, permits under Paragraphs 17, 18, 20, and 25:

1st through 30th day after deadline	$ 800
31st through 60th day after deadline	$1,200
Beyond 60th day	$2,000

(c) for failure to conduct a compliance test as required by Paragraph 28, per

day per unit:

1st through 30th day after deadline	$ 250
31st through 60th day after deadline	$ 500
Beyond 60th day	$1,000

(d) for failure to demonstrate compliance with emission limits set forth in the approved Control Technology Plan or emission limits set pursuant to Part V Section C ("Emission Limits"): $5000 per emissions test for each pollutant

(e) for each failure to submit reports or studies as required by Part V Section E ("Recordkeeping and Reporting Requirements") of this Consent Decree, per day per report or notice:

1st through 30th day after deadline	$ 250
31st through 60th day after deadline	$ 500
Beyond 60th day	$1,000

(f) for failure to pay or escrow stipulated penalties, as specified in Paragraphs 38 and 39 of this section, $500 per day per penalty demand.

(g) for failure to notify the Plaintiffs pursuant to Paragraph 2 of DENCO's sale or transfer of the facility, $250 per day.

38. DENCO shall pay stipulated penalties upon written demand by the Plaintiffs no later than thirty (30) days after Defendant receives such demand. Stipulated penalties shall be paid to the Plaintiffs in the manner set forth in Part VI ("Civil Penalty") of this Consent Decree.

39. Should DENCO dispute its obligation to pay part or all of a stipulated penalty, it may avoid the imposition of the stipulated penalty for failure to pay a penalty due to the

Plaintiffs by placing the disputed amount demanded by the Plaintiffs, not to exceed $20,000 for any given event or related series of events at any one plant, in a commercial escrow account pending resolution of the matter and by invoking the Dispute Resolution provisions of Part X within the time provided in Paragraph 38 for payment of stipulated penalties. If the dispute is thereafter resolved in Defendant's favor, the escrowed amount plus accrued interest shall be returned to the Defendant. Otherwise the Plaintiffs shall be entitled to the escrowed amount that was determined to be due by the Court plus the interest that has accrued on such amount, with the balance, if any, returned to the Defendant.

40. The Plaintiffs reserve the right to pursue any other remedies for violations of this Consent Decree to which they are entitled. The Plaintiffs will not seek stipulated penalties and civil or administrative penalties for the same violation of the Consent Decree.

VIII. RIGHT OF ENTRY

41. Any authorized representative of the EPA or MPCA, or an appropriate federal or state agency, including independent contractors, upon presentation of proper credentials and in compliance with the facility's safety requirements, shall have a right of entry upon the premises of DENCO's plant identified herein at Paragraph 3(b) at any reasonable time for the purpose of monitoring compliance with the provisions of this Consent Decree, including inspecting plant equipment, and inspecting and copying all records maintained by Defendant required by this Consent Decree. Nothing in this Consent Decree shall limit the authority of EPA and MPCA to conduct tests and inspections under Section 114 of the Act, 42 U.S.C. § 7414, and Minnesota Statute §§ 116.07, subd. 9 and 116.091 or any other applicable law.

IX. FORCE MAJEURE

42. If any event occurs which causes or may cause a delay or impediment to performance in complying with any provision of this Consent Decree, Defendant shall notify the Plaintiffs in writing as soon as practicable, but in any event within twenty (20) business days of when Defendant first knew of the event or should have known of the event by the exercise of due diligence. In this notice Defendant shall specifically reference this Paragraph of this Consent Decree and describe the anticipated length of time the delay may persist, the cause or causes of the delay, and the measures taken or to be taken by Defendant to prevent or minimize the delay and the schedule by which those measures will be implemented. Defendant shall adopt all reasonable measures to avoid or minimize such delays.

43. Failure by Defendant to provide notice to Plaintiffs of an event which causes or may cause a delay or impediment to performance shall render this Part IX voidable by the Plaintiffs as to the specific event for which the Defendant has failed to comply with such notice requirement, and, if voided, is of no effect as to the particular event involved.

44. The United States or MPCA shall notify the Defendant in writing regarding the Defendant's claim of a delay or impediment to performance as soon as practicable, but in any event within thirty (30) days of receipt of the Force Majeure notice provided under Paragraph 42. If the Plaintiffs agree that the delay or impediment to performance has been or will be caused by circumstances beyond the control of the Defendant, including any entity controlled by the Defendant, and that the Defendant could not have prevented the delay by the exercise of due diligence, the parties shall stipulate to an extension of the required deadline(s) for all requirement(s) affected by the delay by a period equivalent to the delay actually caused by such

circumstances. The Defendant shall not be liable for stipulated penalties for the period of any such delay.

45. If the Plaintiffs do not accept the Defendant's claim that a delay or impediment to performance is caused by a force majeure event, to avoid payment of stipulated penalties, the Defendant must submit the matter to this Court for resolution within twenty (20) business days after receiving notice of the Plaintiffs' position, by filing a petition for determination with this Court. Once the Defendant has submitted this matter to this Court, the Plaintiffs shall have twenty (20) business days to file its response to said petition. If the Defendant submits the matter to this Court for resolution and the Court determines that the delay or impediment to performance has been or will be caused by circumstances beyond the control of the Defendant, including any entity controlled by the Defendant, and that the Defendant could not have prevented the delay by the exercise of due diligence, the Defendant shall be excused as to that event(s) and delay (including stipulated penalties), for a period of time equivalent to the delay caused by such circumstances.

46. The Defendant shall bear the burden of proving that any delay of any requirement(s) of this Consent Decree was caused by or will be caused by circumstances beyond its control, including any entity controlled by it, and that the Defendant could not have prevented the delay by the exercise of due diligence. The Defendant shall also bear the burden of proving the duration and extent of any delay(s) attributable to such circumstances. An extension of one compliance date based on a particular event may, but does not necessarily, result in an extension of a subsequent compliance date or dates.

47. Unanticipated or increased costs or expenses associated with the performance of

the Defendant's obligations under this Consent Decree shall not constitute circumstances beyond the control of the Defendant, or serve as a basis for an extension of time under this Part. However, failure of a permitting authority to issue a necessary permit in a timely fashion is an event of Force Majeure where the Defendant has taken all steps available to it to obtain the necessary permit including but not limited to:

(a) submitting a timely and complete permit application;

(b) responding to requests for additional information by the permitting authority in a timely fashion; and

(c) prosecuting appeals of any disputed terms and conditions imposed by the permitting authority in an expeditious fashion.

48. Notwithstanding any other provision of this Consent Decree, this Court shall not draw any inferences nor establish any presumptions adverse to either party as a result of Defendant delivering a notice of Force Majeure or the parties' inability to reach agreement.

49. As part of the resolution of any matter submitted to this Court under this Part IX, the parties by agreement, or this Court, by order, may in appropriate circumstances extend or modify the schedule for completion of work under this Consent Decree to account for the delay in the work that occurred as a result of any delay or impediment to performance agreed to by the Plaintiffs or approved by this Court. Defendant shall be liable for stipulated penalties for its failure thereafter to complete the work in accordance with the extended or modified schedule.

X. DISPUTE RESOLUTION

50. The dispute resolution procedure provided by this Part X shall be available to resolve all disputes arising under this Consent Decree, including but not limited to emission

limits established by the MPCA in Part V Section C ("Emission Limits"), except as otherwise provided in Part IX regarding Force Majeure.

51. The dispute resolution procedure required herein shall be invoked upon the giving of written notice by one of the parties to this Consent Decree to another advising of a dispute pursuant to this Part X. The notice shall describe the nature of the dispute, and shall state the noticing party's position with regard to such dispute. The party receiving such a notice shall acknowledge receipt of the notice and the parties shall expeditiously schedule a meeting to discuss the dispute informally not later than fourteen (14) days from the receipt of such notice.

52. Disputes submitted to dispute resolution shall, in the first instance, be the subject of informal negotiations between the parties. Such period of informal negotiations shall not extend beyond thirty (30) calendar days from the date of the first meeting between representatives of the Plaintiffs and the Defendant, unless the parties' representatives agree to shorten or extend this period.

53. In the event that the parties are unable to reach agreement during such informal negotiation period, the Plaintiffs shall provide the Defendant with a written summary of their position regarding the dispute. The position advanced by the Plaintiffs shall be considered binding unless, within forty-five (45) calendar days of the Defendant's receipt of the written summary of the Plaintiffs position, the Defendant files with this Court a petition which describes the nature of the dispute, and includes a statement of the Defendant's position and any supporting data, analysis, and/or documentation relied on by the Defendant. The Plaintiffs shall respond to the petition within forty-five (45) calendar days of filing.

54. Where the nature of the dispute is such that a more timely resolution of the issue is required, the time periods set out in this Part X may be shortened upon motion of one of the parties to the dispute.

55. Notwithstanding any other provision of this Consent Decree, in dispute resolution, this Court shall not draw any inferences nor establish any presumptions adverse to either party as a result of invocation of this Part X or the parties' inability to reach agreement. The final position of the Plaintiffs shall be upheld by the Court if supported by substantial evidence in the record as identified and agreed to by all the Parties.

56. As part of the resolution of any dispute submitted to dispute resolution, the parties, by agreement, or this Court, by order, may, in appropriate circumstances, extend or modify the schedule for completion of work under this Consent Decree to account for the delay in the work that occurred as a result of dispute resolution. Defendant shall be liable for stipulated penalties for its failure thereafter to complete the work in accordance with the extended or modified schedule.

XI. GENERAL PROVISIONS

57. Effect of Settlement. This Consent Decree is not a permit; compliance with its terms does not guarantee compliance with any applicable federal, state or local laws or regulations. To the extent that the terms of this Consent Decree conflict with the terms of any air quality permit, the terms of this Consent Decree shall control during the effective period of the Consent Decree.

58. Resolution of Claims. Satisfaction of all of the requirements of this Consent Decree constitutes full settlement of and shall resolve all past civil and administrative liability of

the Defendant to the Plaintiffs for the violations alleged in the United States' and Plaintiff-Intervenor's Complaints and all civil and administrative liability of the Defendant for any violations at its facility based on facts and events that occurred during the relevant time period under the following statutory and regulatory provisions: (a) NSPS, 40 C.F.R. Part 60, including subparts Dc, Kb, and VV; (b) National Emission Standards for Hazardous Air Pollutants, 40 C.F.R. Part 63, pursuant to Sections 112(d) and 112(g) of the Act; (c) PSD requirements at Part C of the Act and the regulations promulgated thereunder at 40 C.F.R. § 52.21, and the Minnesota regulations which incorporate and/or implement the above-listed federal regulations in items (a) through (c); (d) all air permit requirements under Minn. R. 7007.0050-7007.1850; (e) air emissions fee requirements under Minn. R. 7002.0025-7002.0095; (f) performance standards for stationary sources under Minn. R. 7011.0010-7011.9990, performance tests under Minn. R. 7017.2001-7017.2060; (g) notification, recordkeeping and reporting requirements under Minn. R. 7019.0100-7019.2000; and (h) emission inventory requirements under Minn. R. 7019.3000-7019.3100. For purposes of this Consent Decree, the "relevant time period" shall mean the period beginning when the United States' claims and/or Plaintiff-Intervenor's claims under the above statutes and regulations accrued through the date of entry of this Consent Decree. During the effective period of the Consent Decree, certain emission units shall be on a compliance schedule and any modification to these units, as defined in 40 C.F.R. § 52.21, which is not required by this Consent Decree is beyond the scope of this resolution of claims. This provision shall survive the termination of the Consent Decree.

59. Other Laws. Except as specifically provided by this Consent Decree, nothing in this Consent Decree shall relieve Defendant of its obligation to comply with all applicable

federal, state and local laws and regulations. Subject to Paragraphs 40 and 58, nothing contained in this Consent Decree shall be construed to prevent or limit the United States' or MPCA's rights to obtain penalties or injunctive relief under the Act or other federal, state or local statutes or regulations, including but not limited to, Section 303 of the Act, 42 U.S.C. § 7603.

60. Third Parties. Except as otherwise provided by law, this Consent Decree does not limit, enlarge or affect the rights of any party to this Consent Decree as against any third parties. Nothing in this Consent Decree should be construed to create any rights, or grant any cause of action, to any person not a party to this Consent Decree.

61. Costs. Each party to this Consent Decree shall bear its own costs and attorneys' fees through the date of entry of this Consent Decree.

62. Public Documents. All information and documents submitted by the Defendant to the Plaintiffs pursuant to this Consent Decree shall be subject to public inspection, unless subject to legal privileges or protection or identified and supported as business confidential by the Defendant in accordance with 40 C.F.R. Part 2 and Minnesota Statute §§ 13.37 and 116.075.

63. Public Comments - Federal Approval. The parties agree and acknowledge that final approval by the United States and entry of this Consent Decree is subject to the requirements of 28 C.F.R. § 50.7, which provides for notice of the lodging of this Consent Decree in the Federal Register, an opportunity for public comment, and consideration of any comments. The United States reserves the right to withdraw or withhold consent if the comments regarding this Consent Decree discloses facts or considerations which indicate that this Consent Decree is inappropriate, improper or inadequate. The Defendant and the Plaintiff-Intervenor consent to the entry of this Consent Decree.

64. Notice. Unless otherwise provided herein, notifications to or communications with the United States, EPA, MPCA or the Defendant shall be deemed submitted on the date they are postmarked and sent either by overnight receipt mail service or by certified or registered mail, return receipt requested. Except as otherwise provided herein, when written notification to or communication with the United States, EPA, MPCA or the Defendant is required by the terms of this Consent Decree, it shall be addressed as follows:

As to the United States:

Thomas L. Sansonetti
Assistant Attorney General
Environmental Enforcement Section
Environment and Natural Resources Division
U.S. Department of Justice
P.O. Box 7611, Ben Franklin Station
Washington, DC 20044-7611

As to the U.S. EPA:

Bruce Buckheit
Director, Air Enforcement Division
U.S. Environmental Protection Agency
Ariel Rios Building
1200 Pennsylvania Avenue, N.W.
Mail Code 2242-A
Washington, DC 20004

and the EPA Regional office for the region in which the facility is located:

Region 5:

Cynthia A. King
U.S. EPA, Region 5
C-14J
77 W. Jackson Blvd.
Chicago, IL 60604

Compliance Tracker
Air Enforcement Branch, AE-17J

U.S. EPA, Region 5
77 W. Jackson Blvd.
Chicago, IL 60604

As to Diversified Energy Company:

DENCO
General Manager
Rural Route 3
Box 173
Morris, MN 56267

and

(Counsel for DENCO)

Gerald L. Seck
Larkin, Hoffman, Daly & Lindgren, Ltd.
1500 Wells Fargo Plaza
7900 Xerxes Avenue South
Bloomington, MN 55431

Peder A. Larson
Peder Larson & Associates, PLC
5200 Willson Road
Suite 150
Minneapolis, MN 55424

As to Plaintiff-Intervenor the State of Minnesota, through the MPCA:

Rhonda Land
Minnesota Pollution Control Agency
520 Lafayette Road N
St. Paul, MN 55155-4194

Kathleen L. Winters
Office of the Attorney General
NCL Towers Suite 900
445 Minnesota Street
St. Paul, MN 55101-2127

65. Change of Notice Recipient. Any party may change either the notice recipient or the address for providing notices to it by serving all other parties with a notice setting forth such

new notice recipient or address.

66. Modification. There shall be no modification of this Consent Decree without written agreement of all the parties. There shall be no material modification of this Consent Decree without the written agreement of the parties and by Order of the Court. Prior to complete termination of the requirements of this Consent Decree pursuant to Paragraph 68, the parties may, upon motion to the Court, seek to terminate provisions of this Consent Decree.

67. Continuing Jurisdiction. The Court retains jurisdiction of this case after entry of this Consent Decree to enforce compliance with the terms and conditions of this Consent Decree and to take any action necessary or appropriate for its interpretation, construction, execution, or modification. During the term of this Consent Decree, any party may apply to the Court for any relief necessary to construe or effectuate this Consent Decree.

XII. TERMINATION

68. This Consent Decree shall be subject to termination upon motion by any party after the Defendant satisfies all requirements of this Consent Decree and has operated the control technologies identified in the approved Control Technology Plan in compliance with emission limits, and has demonstrated for 24 months that its actual emissions of VOCs, PM, PM_{10}, SO_2, NOx and CO have remained under 95 TPY. For purposes of meeting the 24-month performance requirement in this Paragraph, Defendant may demonstrate that its actual emissions remained under the 95 TPY allowable emission caps by either using the results of its initial compliance tests or evidence of operating conditions since the installation of the control equipment required in this Consent Decree and in the approved Control Technology Plan. At such time, if the Defendant believes that it is in compliance with the requirements of this Consent Decree, and has

paid the civil penalty and any stipulated penalties required by this Consent Decree, then the Defendant shall so certify to the Plaintiffs, and unless the Plaintiffs object in writing with specific reasons within forty-five (45) days of receipt of the certification, the Court shall order that this Consent Decree be terminated on Defendant's motion. If the United States or MPCA objects to the Defendant's certification, then the matter shall be submitted to the Court for resolution under Part X ("Dispute Resolution") of this Consent Decree. In such case, the Defendant shall bear the burden of proving that this Consent Decree should be terminated.

So entered in accordance with the foregoing this _____day of _____, 2002.

_____

United States District Court Judge
District of Minnesota

FOR PLAINTIFF, UNITED STATES OF AMERICA:

Tom Sansonetti

Date 9.10.02

Thomas L. Sansonetti
Assistant Attorney General
Environment and Natural Resources Division
U.S. Department of Justice
10th & Pennsylvania Avenue, N.W.
Washington, DC 20530

Dianne M. Shawley

Date 8/23/02

Dianne M. Shawley
Senior Counsel
Environment and Natural Resources Division
U.S. Department of Justice
1425 New York Avenue, N.W.
Washington, DC 20005

Date 8/23/02

Cynthia A. King
Special Trial Attorney
US EPA Region 5
77 W. Jackson Street
Chicago, IL 60604

United States Attorney
District of Minnesota

Friedrich A P Siekert

Date 10/1/02

THOMAS B. HEFFELFINGER
United States Attorney

BY: FRIEDRICH A. P. SIEKERT
Assistant U.S. Attorney
Attorney ID No. 142013
District of Minnesota
U.S. Courthouse
300 S. 4th Street
Suite 600
Minneapolis, MN 55415

FOR U.S. ENVIRONMENTAL PROTECTION AGENCY:

Date _____

John Peter Suarez
Assistant Administrator
Office of Enforcement and Compliance Assurance
U.S. Environmental Protection Agency
Ariel Rios Building
1200 Pennsylvania Avenue, N.W.
Washington, DC 20460

FOR U.S. ENVIRONMENTAL PROTECTION AGENCY:

Date 9·20·02

Thomas V. Skinner
Regional Administrator
U.S. Environmental Protection Agency
Region 5
77 West Jackson Street
Chicago, IL 60604

FOR THE PLAINTIFF-INTERVENOR, THE STATE OF MINNESOTA POLLUTION CONTROL AGENCY:

Karen A. Studders

Date 10 October 2002

Commissioner Karen A. Studders
Minnesota Pollution Control Agency
520 Lafayette Road
St. Paul, MN 55155

_____

Date _____

Kathleen L. Winters
Office of the Attorney General
NCL Towers Suite 900
445 Minnesota Street
St. Paul, MN 55101-2127

FOR DEFENDANT, DIVERSIFIED ENERGY COMPANY:

Date _____

Gerald Bachmeier, Chief Manager
DENCO
227 South County Road 22
Morris, MN 56267

Date 8-20-02

Gerald L. Seck
Larkin, Hoffman, Daly & Lindgren, Ltd.
1500 Wells Fargo Plaza
7900 Xerxes Avenue South
Bloomington, MN 55431

Date 8-20-02

Peder A. Larson
Peder Larson & Associates, PLC
5200 Willson Road
Suite 150
Minneapolis, MN 55424

Diversified Energy Company

Morris, Minnesota

Control Technology Plan

August 23, 2002

Prepared by:

Environmental Resource Group, LLC
1000 IDS Center
80 South Eighth Street
Minneapolis, Minnesota 55402

CONTENTS

1.0 INTRODUCTION **1-1**

2.0 EMISSION UNITS REQUIRING POLLUTION CONTROL EQUIPMENT **2-1**

3.0 ENGINEERING DESIGN CRITERIA FOR POLLUTION CONTROL EQUIPMENT **3-1**

3.1 Scenario #1 (Thermal Oxidizer) 3-1

3.2 Scenario #2 3-1

4.0 PROPOSED EMISSION LIMITS FROM POLLUTION CONTROL EQUIPMENT **4-1**

4.1 Interim Scenario 4-1

4.2 Operating Scenario #1 (Thermal Oxidizer) 4-4

4.3 Operating Scenario #2 4-6

4.4 Alternative Operating Scenarios 4-10

5.0 POLLUTION CONTROL EQUIPMENT INSTALLATION SCHEDULE **5-1**

6.0 PROPOSED MONITORING PARAMETERS FOR POLLUTION CONTROL DEVICES **6-1**

7.0 POLLUTION CONTROL DEVICE PERFORMANCE TEST SCHEDULE AND METHODS **7-1**

8.0 FUGITIVE DUST EMISSION CONTROL PROGRAM **8-1**

1.0 INTRODUCTION

On August 19, 2002, Diversified Energy Company (DENCO) signed a consent decree that requires implementing a compliance program at the corn dry mill ethanol plant operating in Morris, Minnesota. DENCO prepared and submitted this Control Technology Plan (CTP) as an integral part of the consent decree. This CTP fulfills the consent decree requirement and has been reviewed and approved by the US Environmental Protection Agency (USEPA) and the Minnesota Pollution Control Agency (MPCA) as part of the consent decree.

DENCO's CTP includes the following:

(a). Identification of all units to be controlled;

(b). Engineering design criteria for all proposed controls capable of meeting the emission levels required by Part V of the Consent Decree;

(c). Proposed short-term and long-term emission limits and controlled outlet concentrations for each pollutant as appropriate;

(d). A schedule for expedited installation with specific milestones applicable on a unit-by-unit basis;

(e). Proposed monitoring parameters for all control equipment and parameter ranges;

(f). Identification of all units to be emission tested under Paragraph 28 of the Consent Decree and a schedule for initial tests and retest;

(g). The test methods that will be used to demonstrate compliance with the emissions levels set forth in the Consent Decree; and

(h). Program for minimization of fugitive dust emissions from facility operations.

2.0 EMISSION UNITS REQUIRING POLLUTION CONTROL EQUIPMENT

The following emission units, fugitive sources, and control equipment have been designated as affected units in the consent decree and have emission limits requiring pollution control technology.

Unit Designation #	Unit Description	Control Equipment #	Control Equipment Description (Pollutant)
EU001	Boiler #1	NA	
EU002	Boiler #2	NA	
EU016	Fermentation Tank #1	CE020	Scrubber (VOC)
EU017	Fermentation Tank #2	CE020	Scrubber (VOC)
EU051	Stripper – Distillation Equipment	CE020	Scrubber (VOC)
EU059	Boiler #3	NA	Low NO_x Burner
EU061	Fermentation Tank #3	CE020	Scrubber (VOC)
EU062	Fermentation Tank #4	CE020	Scrubber (VOC)
EU063	Fermentation Tank #5 (Not Yet Constructed)	CE020	Scrubber (VOC)
EU064	Beerwell #1	CE020	Scrubber (VOC)
EU065	Beerwell #2	CE020	Scrubber (VOC)
EU066	DDGS Dryer	CE021, CE026 or CE027	Mutliclone (PM) TO or Equivalent (VOC, PM)
EU067	Bio-digester	CE020	Scrubber (VOC)
EU068	Rectifier	CE020	Scrubber (VOC)
EU069	Side Stripper	CE020	Scrubber (VOC)
EU070	Molecular Sieve	CE020	Scrubber (VOC)
EU071	DDGS Cyclone	NA	Cyclone (PM)
FS001	Truck Traffic	NA	Paved roads
FS004	Ethanol Loading Rack	CE025	Flare (VOC)
FS005	Equipment Leaks (We will implement Subpart VV leak detection)	NA	LDAR (VOC)
Insignificant Activities	Golden Lyk Production Storage Bins	NA	Wet Cake Diversion (VOC)

3.0 ENGINEERING DESIGN CRITERIA FOR POLLUTION CONTROL EQUIPMENT

After identifying the affected units that require installation of air pollution control technology, DENCO proposes the following pollution control technology for the listed emission unit as identified in the consent decree.

3.1 Scenario #1 (Thermal Oxidizer)

Process Description	Control Device #	Control Device Description	Operating Parameters
Process Scrubber	CE020	Wet Scrubber	Water flow rate > 25 gpm Pressure Drop = 3 to 10 inches w.c.
Denatured Ethanol Truck Loadout	CE025	Flare system	95% VOC combustion, flare operation consistent with 40 CFR 60.18 provisions
DDGS Dryer	CE026	Thermal Oxidizer	Thermal Oxidizer Operating Temperature > 1300 ° F NO_x Design: 0.04 lb/MMBtu
Boiler #1	NA		Design Fuel Input Rate = 25 MMBtu/hr NO_x: 0.055 lb/MMBtu
Boiler #2	NA		Design Fuel Input Rate = 25 MMBtu/hr NO_x: 0.055 lb/MMBtu
Boiler #3	NA	Low NO_x burners	Design Fuel Input Rate = 60 MMBtu/hr NO_x: 0.055 lb/MMBtu
Cooling Cyclone	NA	TBD	TBD

3.2 Scenario #2

Process Description	Control Device #	Control Device Description	Operating Parameters
DDGS Dryer (Operating Scenario #2)	CE027	Thermal Oxidizer equivalent new technology (See Attachments 1 & 2)	TBD

The attached process flow diagram presents the affect units and associated control technology as determined by the results of engineering design criteria.

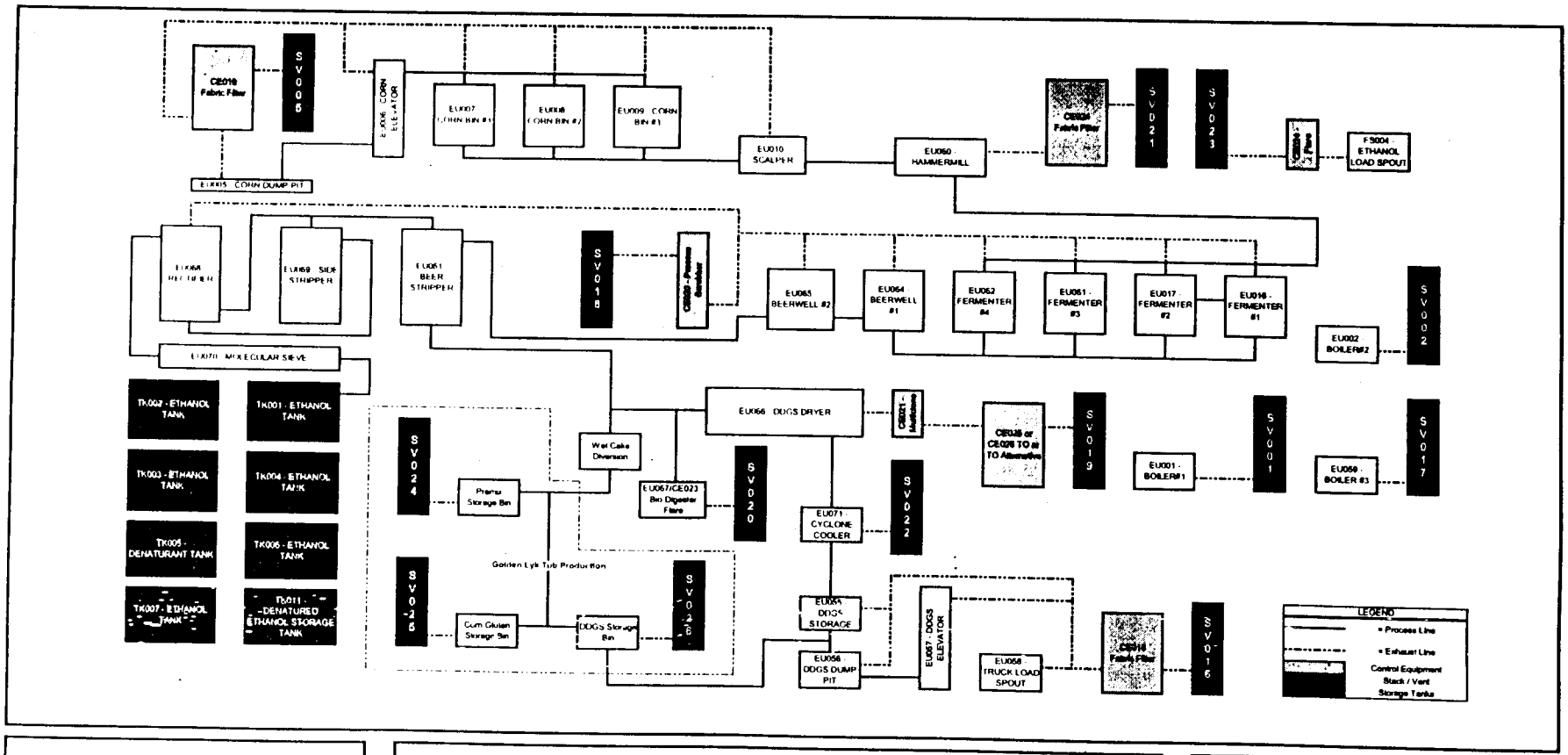

ethanol
Better Fuel. Cleaner Air.

GI-02
Process Flow Diagram
Diversified Energy Company
Morris, Minnesota

DATE: 8/1/02
REVISED: 8/19/02
SCALE: NTS
DRAWN BY: WFVONSEE

ERG

4.0 PROPOSED EMISSION LIMITS FROM POLLUTION CONTROL EQUIPMENT

Unless otherwise stated, all controlled emission limitations apply at all times except during periods when the process equipment is not operating or during previously planned startup and shutdown periods, and malfunctions as defined in 40 CFR section 63.2. These startup and shutdown periods shall not exceed the minimum amount of time necessary for these events, and during these events, DENCO shall minimize emissions to the greatest extent practicable. To the extent practical, startup and shutdown of control technology systems will be performed during times when process equipment is also shut down for routine maintenance.

In addition to the limits listed below, all emission sources will comply with a 12-month rolling sum source wide SO2 cap of 95 TPY.

Any deviation from the requirements in 4.0 through 4.4 shall be reported in the quarterly reports and as required under other state and federal rules.

4.1 Interim Scenario

Process Description	Control Device #	Control Device Description	Pollutant	Short Term Emission Rate	Long Term Emission Rate
DDGS Dryer			CO	90% reduction or emissions no higher than 100 ppm.	12-month rolling sum source wide CO cap of 95 TPY.
			NO_x		12-month rolling sum source wide NO_x cap of 95 TPY and 12-month rolling sum Dryer and Boilers NO_x cap of 27.30 TPY. (See Attachment 4)
			PM/PM_{10}	Test and set pursuant to process outlined under paragraph 24 of the Consent Decree	12-month rolling sum source wide PM/PM_{10} cap of 95 TPY.
			HAPs		12-month rolling sum total facility emission cap of 9.0 TPY for any single HAP and 24.0 TPY for total HAPs.

Process Description	Source Device	Control Device Description	Pollutant	Short Term Emission Rate	Long Term Emission Rate
			VOC	lb/hr limits to be established based on performance testing under the process outlined under Paragraph 24 of the Consent Decree.	12-month rolling sum source wide VOC cap of 95 TPY.
Boiler #1	EU001		NO_x		12-month rolling sum source wide NO_x cap of 95 TPY and 12-month rolling sum Dryer and Boilers NO_x cap of 27.30 TPY. (See Attachment 4)
Boiler #2	EU002		NO_x		12-month rolling sum source wide NO_x cap of 95 TPY and 12-month rolling sum Dryer and Boilers NO_x cap of 27.30 TPY. (See Attachment 4)
Boiler #3	EU059	Ultra-Low NO_x Burners	NO_x		12-month rolling sum source wide NO_x cap of 95 TPY and 12-month rolling sum Dryer and Boilers NO_x cap of 27.30 TPY. (See Attachment 4)
Cooling Cyclone	EU071	TBD	VOC	To be established pursuant to process outlined under paragraph 24 of the Consent Decree	12-month rolling sum source wide VOC cap of 95 TPY.
			HAPs		12-month rolling sum total facility emission cap of 9.0 TPY for any single HAP and 24.0 TPY for total HAPs.

Process Description	Control Device	Control Device Description	Pollutant	Short Term Emission Rate	Long Term Emission Rate
Fermentation Units	CE020	Wet scrubber	VOC	95% reduction or <20 ppm if inlet concentration is below 200 ppm; lb/hr limits to be established based on performance testing under the process outlined under Paragraph 24 of the Consent Decree	12-month rolling sum source wide VOC emission cap of 95 TPY.
			HAPs		12-month rolling sum total facility emission cap of 9.0 TPY for any single HAP and 24.0 TPY for total HAPs.
NOx Unit Group Cap	EU001 EU002 EU059 EU066	Low NO_x Equivalent	NO_x		12-month rolling sum source wide NO_x cap of 95 TPY and 12-month rolling sum Dryer and Boilers NO_x cap of 27.30 TPY. (See Attachment 4)
Truck Loadout	CE025	Flare	VOC	95% reduction	12-month rolling sum source wide VOC cap of 95 TPY.
			HAPs		12-month rolling sum total facility emission cap of 9.0 TPY for any single HAP and 24.0 TPY for total HAPs.

4.2 Operating Scenario #1 (Thermal Oxidizer)

Process Description	Control Device #	Control Device Description	Pollutant	Short Term Emission Rate	Long Term Emission Rate
DDGS Dryer	CE026	Thermal Oxidizer Thermal oxidizer with low NO_x burners.	CO	90% reduction or emissions no higher than 100 ppm.	12-month rolling sum source wide CO cap of 95 TPY.
			NO_x		12-month rolling sum source wide NO_x cap of 95 TPY and 12-month rolling sum Dryer, Boilers, and TO Group NO_x cap of 39.9 TPY. (See Attachment 4)
			PM/PM_{10}	Test and set pursuant to process outlined under paragraph 24 of the Consent Decree	12-month rolling sum source wide PM/PM_{10} cap of 95 TPY.
			HAPs		12-month rolling sum total facility emission cap of 9.0 TPY for any single HAP and 24.0 TPY for total HAPs.

Process Description	Control Device	Control Device Description	Pollutant	Short Term Emission Rate	Long Term Emission Rate
			VOC	95 % destruction efficiency or emissions no higher than 10 ppm outlet VOC concentration after installation of TO equivalent technology; lb/hr limits to be established based on performance testing under the process outlined under Paragraph 24 of the Consent Decree	12-month rolling sum source wide VOC cap of 95 TPY.
Boiler #1	EU001		NO_x		12-month rolling sum source wide NO_x cap of 95 TPY and 12-month rolling sum Dryer, Boilers, and TO Group NO_x cap of 39.9 TPY. (See Attachment 4)
Boiler #2	EU002		NO_x		12-month rolling sum source wide NO_x cap of 95 TPY and 12-month rolling sum Dryer, Boilers, and TO Group NO_x cap of 39.9 TPY. (See Attachment 4)
Boiler #3	EU059	Ultra-Low NO_x Burners	NO_x		12-month rolling sum source wide NO_x cap of 95 TPY and 12-month rolling sum Dryer, Boilers, and TO Group NO_x cap of 39.9 TPY. (See Attachment 4)

Process Description	Control Device #	Control Device Description	Pollutant	Short Term Emission Rate	Long Term Emission Rate
NOx Unit Group Cap	EU001 EU002 EU059 EU066 CE026	Low NO_x Equivalent	NO_x		12-month rolling sum source wide NO_x cap of 95 TPY and 12-month rolling sum Dryer #1, TO, Boiler #1, #2, and #3 Group NO_x cap of 39.9 TPY (See Attachment 4)

4.3 Operating Scenario #2

Process Description	Control Device #	Control Device Description	Pollutant	Short Term Emission Rate	Long Term Emission Rate
DDGS Dryer	CE027	Thermal Oxidizer equivalent new technology (See Attachments 1 & 2)	CO	90% reduction or emissions no higher than 100 ppm.	12-month rolling sum source wide CO cap of 95 TPY.
			NO_x		12-month rolling sum source wide NO_x cap of 95 TPY and 12-month rolling sum Dryer and Boilers Group NO_x cap TBD. (See Attachment 4)
			PM/PM_{10}	Test and set pursuant to process outlined under paragraph 24 of the Consent Decree	12-month rolling sum source wide PM/PM_{10} cap of 95 TPY.
			HAPs		12-month rolling sum total facility emission cap of 9.0 TPY for any single HAP and 24.0 TPY for total HAPs.

Process Description	Control Device	Control Device Description	Pollutant	Short Term Emission Rate	Long Term Emission Rate
			VOC	95 % destruction efficiency or emissions no higher than 10 ppm outlet VOC concentration after installation of TO equivalent technology; lb/hr limits to be established based on performance testing under the process outlined under Paragraph 24 of the Consent Decree	12-month rolling sum source wide VOC cap of 95 TPY.
TO Alternative Technology	CE027	Pending BACT Analysis	NO_x	Test and set pursuant to process outlined under Paragraph 24 of the Consent Decree	12-month rolling sum source wide NO_x cap of 95 TPY and 12-month rolling sum Dryer and Boilers Group NO_x cap TBD. (See Attachment 4)
			SO_2	Test and set pursuant to process outlined under Paragraph 24 of the Consent Decree	12-month rolling sum source wide SO_2 cap of 95 TPY.
			PM	Test and set pursuant to process outlined under Paragraph 24 of the Consent Decree	12-month rolling sum source wide PM cap of 95 TPY.
			CO	Test and set pursuant to process outlined under Paragraph 24 of the Consent Decree	12-month rolling sum source wide CO cap of 95 TPY.

Process Description	Control Device	Control Device Description	Pollutant	Short Term Emission Rate	Long Term Emission Rate
Boiler #1	EU001		NO_x		12-month rolling sum source wide NO_x cap of 95 TPY and 12-month rolling sum Dryer and Boilers Group NO_x cap TBD. (See Attachment 4)
Boiler #2	EU002		NO_x		12-month rolling sum source wide NO_x cap of 95 TPY and 12-month rolling sum Dryer and Boilers Group NO_x cap TBD. (See Attachment 4)
Boiler #3	EU059	Ultra-Low NO_x Burners	NO_x		12-month rolling sum source wide NO_x cap of 95 TPY and 12-month rolling sum Dryer and Boilers Group NO_x cap TBD. (See Attachment 4)
NOx Unit Group Cap	EU001 EU002 EU059 EU066	Low NO_x Equivalent	NO_x		12-month rolling sum source wide NO_x cap of 95 TPY and 12-month rolling sum Dryer and Boilers Group NO_x cap TBD. (See Attachment 4)

For all source-wide emission limits during the first 11 months of operation, the facility will maintain the following source-wide limits in Tons Per Year:

	Mo 1				Mo 2	Mo 3	Mo 4	Mo 5	Mo 6	Mo 7	Mo 8	Mo 9	Mo 10	Mo 11
	WK1	Wk2	Wk3	Wk4										
Source wide VOC, CO, NOx and PM/PM10	12				24	36	45	56	64	72	80	84	88	92
NOx for Dryer #1, Boilers #1, #2, and #3 (Interim Limit)	2	3	4	5	10	13	16	19	21	22	23	24	25	26
NOx for Dryer #1, Boilers #1, #2, and #3 and TO (Scenario #1 Limit)	2	3	4	5	10	15	20	25	30	34	36	37	38	39
Individual HAP/ Total HAPs	1.6/ 3.0				3.2/ 6.0	4.0/ 9.0	4.8/ 12	5.6/ 14	6.4/ 16	7.2/ 18	8.0/ 20	8.2/ 21	8.5/ 22	8.8/ 23

Recordkeeping

Record fuel usage daily for each unit subject to the NO_x group emissions cap. Calculate the NO_x group emissions from the previous week and the NO_x Group emissions from the previous 51 weeks (52 week rolling sum). Calculate the total 52-week rolling sum for NO_x emissions from all units according to Equation 1:

$$\sum_{i=1}^{n} E_{n_i} = \sum_{i=1}^{x} \left[NG_{x_i} \left(MMBtu/_{week} \right) \bullet EF_x \left(lb/_{MMBtu} \right) \bullet 0.0005 \left(ton/_{lb} \right) \right] \qquad \text{Eqn 1}$$

where:

x = number of units;
n = number of weeks of interest;

$\sum_{i=1}^{n} E_{n_i}$ = sum of weekly NO_x emissions from unit x (tons/52 weeks);

NGx_i = i^{th} week natural gas usage of emission unit x (MMBtu/week); and

EF_x = unit specific emission factor determined by stack testing.

4.4 Alternative Operating Scenarios

- Details of Operating Scenario #2 will be submitted as they are available. Please see Attachment 1 for the most recent information on the TO alternative technology.

- Greater than or equal to 20 percent of wet cake throughput will be diverted from the DDGS dryer and will be sold or used in Golden Lyk Production. DENCO will keep daily records of wet cake, Golden Lyk, and DDGS sales.

5.0 POLLUTION CONTROL EQUIPMENT INSTALLATION SCHEDULE

Deviations shall be reported quarterly or more frequently if required by State and Federal rules.

Flare Installation Schedule

- Order by October 1, 2002;
- Delivery by November 8, 2002; and
- Operational by January 31, 2003.

Thermal Oxidizer or Alternative Technology Milestones

- TO design criteria and manufacturer information submitted to MPCA for approval by November 1, 2002 to become an enforceable part of CTP if applicable;
- Bench-scale (Phase I) testing of TO alternative technology by November 20, 2002;
- Results of bench scale testing submitted to MPCA by December 20, 2002;
- Detailed schedule for TO alternative technology by December 31, 2002 to be submitted to MPCA for approval to become an enforceable part of the CTP if applicable;
- By January 31, 2003 or upon receipt of MPCA written notice, order thermal oxidizer or select TO alternative technology in accordance with implementation schedule.;
- If thermal oxidizer is selected, submit a detailed installation schedule by February 28, 2003 to MPCA for approval to become an enforceable part of the CTP;
- If thermal oxidizer is selected, start-up by October 31, 2003;
- If TO alternative technology option is selected, implement wet cake recordkeeping and reporting by February 1, 2003 or upon receipt of MPCA written notice;

If TO alternative technology is selected, the implementation schedule is outlined below:

Phase II Pilot Work (Timeline from 9-18 months)

- Submit a detailed installation schedule by February 28, 2003 to the MPCA for approval to become an enforceable part of the CTP.

- o The schedule shall include at a minimum: delivery date, start of construction date, start of operation date, testing dates and testing protocol and, for alternative technology, grant proposal timelines and dates for BACT analysis submittal for NO_x, CO, SO_2, and PM/PM_{10}, if greater than significant levels, and a group NO_x limit calculated for Scenario #2.;

- Start site preparation for pilot work in February 28, 2003;

- If Phase II is successful, submit a letter of intent to proceed with Phase III to MPCA within 15 days of completion of Phase II.

Phase III full implementation of TO alternative technology (timeline from 12-24 months, starting December, 2003)

- Start site preparation for full implementation work no later than 15 days following the date of the letter of intent to proceed with Phase III but no later than July 1, 2003;

- Submit a detailed installation schedule to the MPCA for approval to become an enforceable part of the CTP no later than 15 days following the date of the letter of intent to proceed with Phase III, but no later than July 1, 2004. The final compliance date outlined in the schedule should not extend beyond October 31, 2004. DENCO shall achieve compliance with all applicable emissions limits at the facility by no later than this date.

  - o The schedule shall include at a minimum: delivery dates, start of construction date, start of operation dates, proposed Group NO_x limit, testing date(s), and testing protocol;

If at any point DENCO chooses to abandon the alternative technology, DENCO must:

- Notify the MPCA immediately that the project has been abandoned;

- Submit a detailed thermal oxidizer installation schedule to the MPCA for approval to become an enforceable part of the CTP;

- Order a thermal oxidizer within 30 days of notice of abandonment; and

- Start-up of thermal oxidizer within nine (9) months from ordering date.

6.0 PROPOSED MONITORING PARAMETERS FOR POLLUTION CONTROL DEVICES

The consent decree requires that monitoring parameters be established for affected pollution control devices. DENCO is proposing the following monitoring parameters for each of the affected pollution control devices. Any deviations of monitoring frequency, recordkeeping, and/or operating ranges shall to be reported in quarterly reports unless more frequent reporting is required by state or federal regulations.

Control Device	Control Device Description	Parameter Monitored	Operating Range	Monitoring Frequency
CE020	Process Scrubber	Water Flow Rate	> 25 gpm	Continuously and recorded once Daily when operating
		Pressure Drop	3 to 10 inches of water column	Continuously and recorded once Daily when operating
CE025	Flare System	Flame detection		Continuous
CE026	Thermal Oxidizer	Temperature	> 1300 ° F	Continuous
CE027	TO alternative technology	TBD	TBD	TBD
FS005	Leak detection	As stated in 40 CFR Subpart VV	As stated in 40 CFR Subpart VV	As stated in 40 CFR Subpart VV
EU066	DDGS Dryer	Syrup Feed	TBD	24-hour average
		Beer Feed	TBD	24-hour average
NO_x Group EU001 EU002 EU059 EU066 CE026 CE027	 Boiler #1 Boiler #2 Boiler #3 DDGS Dryer TO or TO Alternative	Fuel Usage		Weekly monitor and record fuel usage and type for each unit, calculate NOx emissions weekly based on latest stack test data
EU071	Cooling Cyclone	TBD	TBD	TBD

7.0 POLLUTION CONTROL DEVICE PERFORMANCE TEST SCHEDULE AND METHODS

The following schedule and methods will be used to demonstrate initial compliance with the emission limits contained in Section 4.0 of this Control Technology Plan.

DENCO shall conduct the following performance testing pursuant to the Consent Decree schedule. The CD states that no later than 180 days following the start-up of the last piece of control equipment required in the approved Control Technology Plan, DENCO shall demonstrate through emissions testing of each emissions unit as specified in the approved Control Technology Plan, conducted in accordance with the MPCA and U.S. EPA approved test protocol, that it has met the required destruction efficiency and/or emission limit. DENCO shall follow all testing requirements in Minnesota Rule 7017

Process Description	Unit / Control Device / Stack Vent #	Unit / Control Device Description	Pollutants	Proposed Methods Used
DDGS Dryer (Operating Scenario #1)	EU066/ CE026/ SV019	Thermal oxidizer selection by January 31, 2003, with installation by October 31, 2003	CO Inlet And Outlet	Method 1, 2, 3B, 4, and 10
			NO_x	Method 1, 2, 3B, 4, and 7E
			PM/PM_{10} Inlet And Outlet	Method 1, 2, 3B, 4, 5 and 202
			VOC Inlet	Method 1, 2, 3B, 4, 25 (unless the outlet concentration is < 50 ppm, then 25A will be used)
			VOC Outlet, Speciated VOCs/HAPs	Method 1, 2, 3B, 4, Method 18 NCASI CI/WP-98.01 and 25 (unless the outlet concentration is < 50 ppm, then 25A will be used)
Flare System	FS004 / CE025/ SV023			Flare operation consistent with 40 CFR 60.18 provisions
Process scrubber	CE020 / SV018	Process Scrubber for VOC control	VOC Inlet and Outlet	Method 1, 2, 3 or 3A, 4, Method 18 NCASI CI/WP-98.01 and VOC test method as approved by the parties in the Performance Test Plan Protocol.
Cooling Cyclone	EU071 / SV022	Cooling Cyclone	VOC Outlet, Speciated VOCs/HAPs	Method 1, 2, 3B, 4, Method 18 NCASI CI/WP-98.01 and 25 (unless the outlet concentration is < 50 ppm, then 25A will be used)
Boiler #1	EU001 / SV001	Boiler	NO_x	Method 1, 2, 3B, 4, and 7E

Process Description	Unit/ Control Device/ Stack/ Vent	Unit/ Control Device Description	Pollutants	Proposed Methods Used
			CO	Method 10
Boiler #2	EU002 / SV002	Boiler	NO_x	Method 1, 2, 3B, 4, and 7E
			CO	Method 10
Boiler #3	EU059 / SV017	Boiler	NO_x	Method 1, 2, 3B, 4, and 7E
			CO	Method 10

Process Description	Unit/ Control Device/ Stack/ Vent	Unit/ Control Device Description	Pollutants	Proposed Methods Used
DDGS Dryer (Operating Scenario #2)	EU066/ CE027/ SV019	TO alternative technology selection by December 2002, with installation TBD	CO Inlet And Outlet	Method 1, 2, 3B, 4, and 10
			NO_x	Method 1, 2, 3B, 4, and 7E
			PM/PM_{10} Inlet And Outlet	Method 1, 2, 3B, 4, 5 and 202
			VOC Inlet	Method 1, 2, 3B, 4, 25 (unless the outlet concentration is < 50 ppm, then 25A will be used)
			VOC Outlet, Speciated VOCs/HAPs	Method 1, 2, 3B, 4, Method 18 NCASI CI/WP-98.01 and 25 (unless the outlet concentration is < 50 ppm, then 25A will be used)

8.0 FUGITIVE DUST EMISSION CONTROL PROGRAM

The objectives of the Fugitive Control Program are to prevent and minimize the release of avoidable fugitive emissions as required by the consent decree. The Program describes the procedures DENCO will use to control emissions, to determine when emissions are at levels requiring corrective action, and to reduce excessive emissions to acceptable levels.

- DENCO has paved existing roads (see Attachment 3).

DENCO will implement the following actions to minimize fugitive dust emissions

- *DENCO will perform weekly visual inspections of the roads. Document the inspection was preformed and describe any corrective actions taken.*

- *DENCO will sweep the roads as required. As required includes but is not limited to:*

  - *Silt has accumulated to visible levels on the road surface*

  - *Fugitive emissions are observed that are caused by car/truck traffic on DENCO roads.*

- In the event that sweeping is not possible due to weather conditions; DENCO will use water, or mechanical means of removal to minimize identified fugitive dust emissions.

Any deviations shall be reported in quarterly reports unless more frequent reporting is required by state or federal regulations.

Attachment 1

University Technology, Inc.
1200 Highway 19 P. O. Box 520
Slaughter, LA 70777
225-658-0202

July 22, 2002

Mr. Gerald Bachmeier
Denco, L. L. C.
South County Road 22
Morris, MN 56267

Dear Gerald:

This letter is to confirm our recent conversation concerning the proposed project between your company, Denco, L. L. C., and our company, University Technology, Inc. As you know, UTI has been heavily involved in the research and development of a project that significantly alters the process sequence in an ethanol production facility. The process requires the elimination of your present drying procedure and utilizes another method of drying that would eliminate your present VOC and HAP emission concerns.

We have just concluded the first in a series of tests of this technology at Texas A & M University using whole stillage produced at your facility. Dr. Sefa Koseoglu, head of the Separations Science Program supervised the work. A & M's results indicate that our own initial calculations were correct in greatly altering ethanol production to such a degree that the emission concerns would be a thing of the past. We are due back at A & M next month to further test our process.

I apologize for being somewhat vague in this letter. As we discussed, because of the sensitive position we are in relative to our patent filing and protection of intellectual property we have to be very careful about anything we release. I am comfortable, due to the confidentiality agreements we have signed, that you are familiar enough with this new technology to appreciate the significant economic and HAP impact that we hope to have on the ethanol industry.

We appreciate the opportunity to work with your company and feel that within 24 to 36 months the technology will be commercialized.

Sincerely,

John Prevost

University Technology, Inc.
1200 Highway 19 P. O. Box 520
Slaughter, LA 70777
225-658-0202

July 22, 2002

Mr. Gerald Bachmeier
Denco, L. L. C.
South County Road 22
Morris, MN 56267

Dear Gerald:

This letter is to confirm our recent conversation concerning the proposed project between your company, Denco, L. L. C., and our company, University Technology, Inc. As you know, UTI has been heavily involved in the research and development of a project that significantly alters the process sequence in an ethanol production facility. The process requires the elimination of your present drying procedure and utilizes another method of drying that would eliminate your present VOC and HAP emission concerns.

We have just concluded the first in a series of tests of this technology at Texas A & M University using whole stillage produced at your facility. Dr. Sefa Koseoglu, head of the Separations Science Program supervised the work. A & M's results indicate that our own initial calculations were correct in greatly altering ethanol production to such a degree that the emission concerns would be a thing of the past. We are due back at A & M next month to further test our process.

I apologize for being somewhat vague in this letter. As we discussed, because of the sensitive position we are in relative to our patent filing and protection of intellectual property we have to be very careful about anything we release. I am comfortable, due to the confidentiality agreements we have signed, that you are familiar enough with this new technology to appreciate the significant economic and HAP impact that we hope to have on the ethanol industry.

We appreciate the opportunity to work with your company and feel that within 24 to 36 months the technology will be commercialized.

Sincerely,

John Prevost

Attachment 2

DENCO, LLC

DIVERSIFIED ENERGY COMPANY, LLC

Gerald Bachmeier, ***General Manager***

The West Central Regional Renewable Energy Project is a joint initiative of the University of Minnesota and the west central Minnesota community of Morris working with several local and regional business interests. The scope of this project involves a comprehensive networking of energy needs and sources to determine extent of a co-share distribution system.

DENCO has been an active participant in this project since its inception, and has been identified as a most logical supplier of excess heat recovery and co-generation partner utilizing wet cake as a feedstock for methane digesting systems. The potential reduction, and perhaps elimination, of dryer stack emissions is a significant factor in DENCO's continued involvement.

This is but one more innovative approach to mitigating operational and process impact on the Morris community by significantly reducing total plant emissions. Combined with our efforts to commercialize emerging technologies, which will reduce total VOC's through process improvements, we believe DENCO is an industry leader in adopting "Best Available Control Technology" which will achieve EPA/MPCA permit tolerances.

DENCO respectfully requests that consideration for past, current and planned process modifications are viewed as Best Available Control Technologies.

Respectfully submitted,

DENCO Board of Governors and Management

227 South County Road 22 • Morris, MN 56267 • Phone: 320-589-2931 • Fax 320-589-1207

Attachment 3

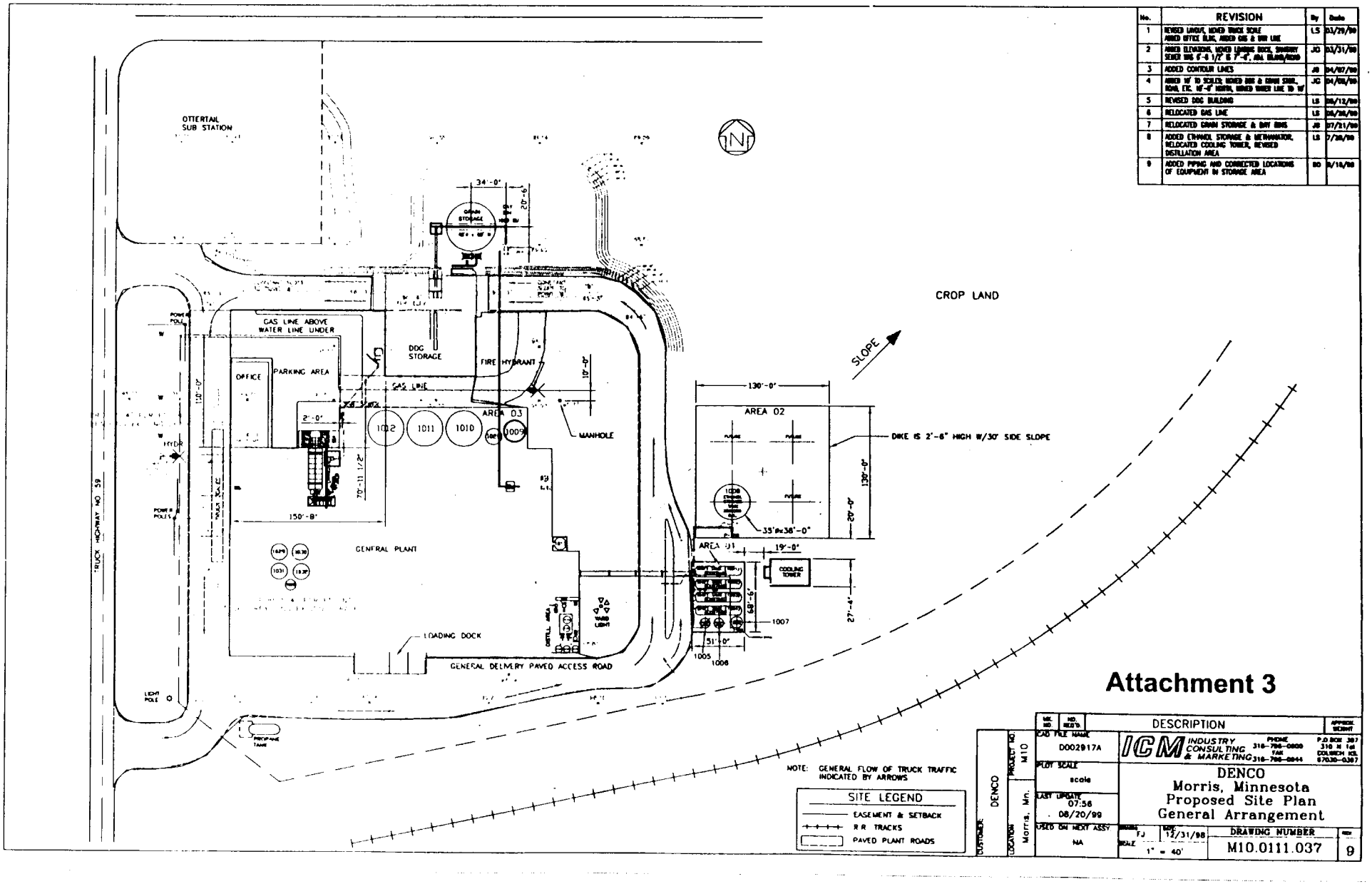

No.	REVISION	By	Date
1	REVISED LAYOUT, MOVED TRUCK SCALE ADDED OFFICE BLDG, ADDED GAS & WTR LINE	LS	03/29/99
2	ADDED ELEVATIONS, MOVED LOADING DOCK, SANITARY SEWER WAS 6'-6 1/2" IS 7'-6", ADJ. BLAND/ROAD	JG	03/31/99
3	ADDED CONTOUR LINES	JG	04/07/99
4	ADDED 10' TO SCALES; MOVED DDG & GRAIN STOR., ROAD, ETC. 10'-0" NORTH, MOVED WATER LINE TO 10'	JG	04/08/99
5	REVISED DDG BUILDING	LS	05/12/99
6	RELOCATED GAS LINE	LS	06/28/99
7	RELOCATED GRAIN STORAGE & BAY BINS	JG	07/21/99
8	ADDED ETHANOL STORAGE & METHANATOR, RELOCATED COOLING TOWER, REVISED DISTILLATION AREA	LS	7/28/99
9	ADDED PIPING AND CORRECTED LOCATIONS OF EQUIPMENT IN STORAGE AREA	BO	8/18/99

Attachment 3

MK. NO.	NO. REQ'D.	DESCRIPTION	APPROX. WEIGHT

CAD FILE NAME: D002917A
PLOT SCALE: scale
LAST UPDATE: 07:56 08/20/99
USED ON NEXT ASSY: NA

ICM INDUSTRY CONSULTING & MARKETING
PHONE 316-796-0800 FAX 316-796-0844
P.O.BOX 387 310 N 1st COLWICH KS. 67030-0387

DENCO
Morris, Minnesota
Proposed Site Plan
General Arrangement

DRAWN: FJ DATE: 12/31/98
SCALE: 1" = 40'
DRAWING NUMBER: M10.0111.037
REV: 9

CUSTOMER: DENCO
PROJECT NO. M10
LOCATION: Morris, Mn.

Attachment 4

ATTACHMENT 4

DENCO
Emission Calculations for Dryers, Boiler and TO NOx Limit

Interim Limit

All units burning only pipeline quality natural gas for 344 days per year
Assume 0.04 lbs/MMBtu average emission factor and 8260 hours of operation per year.

Source	Capacity (MMBtu/hr)
Dryer #1	38
Boiler #1	24.5
Boiler #2	24.5
Boiler #3	60
Total	147

0.04 lbs/MMBtu X 147 MMBtu/hr =

Boiler and dryers burning propane for 500 hours per year, all other units burning pipeline quality natural gas
Assume 0.08 lbs/MMBtu for propane fired units and 0.04 lbs/MMBtu for natural gas and 500 hours of operation per year.

Source	Capacity (MMBtu/hr)
Dryer #1	38
Boiler #1	24.5
Boiler #2	24.5
Boiler #3	60
Total	147

0.08 lbs/MMBtu X 147 MMBtu/hr =

	lbs/hr	TPY	
NOx	5.88	24.28	**Natural gas**
	11.76	2.94	**Propane**
		27.3	**Total**

Operating Scenario #1 (Thermal Oxidizer)

All units burning only pipeline quality natural gas for 344 days per year
Assume 0.04 lbs/MMBtu average emission factor and 8260 hours of operation per year.

Source	Capacity (MMBtu/hr)
Dryer #1	38
Boiler #1	24.5
Boiler #2	24.5
Boiler #3	60
TO	72
Total	219

0.04 lbs/MMBtu X 219 MMBtu/hr =

Boiler and dryers burning propane for 500 hours per year, all other units burning pipeline quality natural gas
Assume 0.08 lbs/MMBtu for propane fired units and 0.04 lbs/MMBtu for natural gas and 500 hours of operation per year.

Source	Capacity (MMBtu/hr)
Dryer #1	38
Boiler #1	24.5
Boiler #2	24.5
Boiler #3	60
TO	72
Total	219

0.04 lbs/MMBtu X 72 MMBtu/hr =
0.08 lbs/MMBtu X 147 MMBtu/hr =

	lbs/hr	TPY	
NOx	8.76	36.18	**Natural gas**
	14.64	3.66	**Propane**
		39.9	**Total**

Operating Scenario #2

NOx To be determined assuming 0.04 lb/MMBtu average emission factor and 8760 hours of operation per year.